Installation & Operation Manual

SLA5800 Series
Mass Flow Controllers & Meters

BROOKS®
INSTRUMENT
Beyond Measure

Essential Instructions
Read before proceeding!

Brooks Instrument designs, manufactures and tests its products to meet many national and international standards. These products must be properly installed, operated and maintained to ensure they continue to operate within their normal specifications. The following instructions must be adhered to and integrated into your safety program when installing, operating and maintaining Brooks Instrument products.

- To ensure proper performance, use qualified personnel to install, operate, update, program and maintain the product.
- Read all instructions prior to installing, operating and servicing the product. If this instruction manual is not the correct manual, please see back cover for local sales office contact information. Save this instruction manual for future reference.

⚠ **WARNING: Do not operate this instrument in excess of the specifications listed in the Instruction and Operation Manual. Failure to heed this warning can result in serious personal injury and / or damage to the equipment.**

- If you do not understand any of the instructions, contact your Brooks Instrument representative for clarification.
- Follow all warnings, cautions and instructions marked on and supplied with the product.

⚠ **WARNING: Prior to installation ensure this instrument has the required approval ratings to meet local and national codes. Failure to heed this warning can result in serious personal injury and / or damage to the equipment.**

- Install your equipment as specified in the installation instructions of the appropriate instruction manual and per applicable local and national codes. Connect all products to the proper electrical and pressure sources.
- Operation: (1) Slowly initiate flow into the system. Open process valves slowly to avoid flow surges. (2) Check for leaks around the flow meter inlet and outlet connections. If no leaks are present, bring the system up to the operating pressure.
- Please make sure that the process line pressure is removed prior to service. When replacement parts are required, ensure that qualified people use replacement parts specified by Brooks Instrument. Unauthorized parts and procedures can affect the product's performance and place the safe operation of your process at risk. Look-alike substitutions may result in fire, electrical hazards or improper operation.
- Ensure that all equipment doors are closed and protective covers are in place to prevent electrical shock and personal injury, except when maintenance is being performed by qualified persons.

⚠ **WARNING: For liquid flow devices, if the inlet and outlet valves adjacent to the devices are to be closed for any reason, the devices must be completely drained. Failure to do so may result in thermal expansion of the liquid that can rupture the device and may cause personal injury.**

European Pressure Equipment Directive (PED)

All pressure equipment with an internal pressure greater than 0.5 bar(g) and a size larger than 25mm or 1" (inch) falls under the Pressure Equipment Directive (PED).

- The Specifications Section of this manual contains instructions related to the PED directive.
- Products described in this manual are in compliance with EN directive 2014/34/EU.
- All Brooks Instrument Flowmeters fall under fluid group 1.
- Products larger than 25mm or 1" (inch) are in compliance with PED category I, II or III.
- Products of 25mm or 1" (inch) or smaller are Sound Engineering Practice (SEP).

European Electromagnetic Compatibility (EMC)

The Brooks Instrument (electric/electronic) equipment bearing the CE mark has been successfully tested to the regulations of the Electro Magnetic Compatibility (EMC directive 2014/30/EU).
Special attention however is required when selecting the signal cable to be used with CE marked equipment.

Quality of the signal cable, cable glands and connectors:

Brooks Instrument supplies a limited selection of high quality cable(s) which meets the specifications for CE certification.
If you provide your own signal cable you should use a cable which is overall completely screened with a 100% shield.
"D" or "Circular" type connectors used should be shielded with a metal shield. If applicable, metal cable glands must be used providing cable screen clamping.
The cable screen should be connected to the metal shell or gland and shielded at both ends over 360 Degrees.
The shield should be terminated to an earth ground. Card Edge Connectors are standard non-metallic. The cables used must be screened with 100% shield to comply with CE certification. The shield should be terminated to an earth ground. For additional instruction regarding Protective Earth (PE) Connections please refer to Section 2, **Electrical Interface** page 29.
For pin configuration: Please refer to the enclosed Instruction Manual.

ESD (Electrostatic Discharge)

⚠ **CAUTION: This instrument contains electronic components that are susceptible to damage by static electricity. Proper handling procedures must be observed during the removal, installation or other handling of internal circuit boards or devices.**

Handling Procedure:

1. Power to unit must be removed.
2. Personnel must be grounded, via a wrist strap or other safe, suitable means before any printed circuit card or other internal device is installed, removed or adjusted.
3. Printed circuit cards must be transported in a conductive container. Boards must not be removed from protective enclosure until immediately before installation. Removed boards must immediately be placed in protective container for transport, storage or return to factory.

Comments

This instrument is not unique in its content of ESD (electrostatic discharge) sensitive components. Most modern electronic designs contain components that utilize metal oxide technology (NMOS, SMOS, etc.). Experience has proven that even small amounts of static electricity can damage or destroy these devices. Damaged components, even though they appear to function properly, exhibit early failure.

Section 1 Introduction

1-1 Purpose 5
1-2 Specifications 5
1-3 Certifications 9
1-4 Reference Conditions 10
1-5 Biotech Option Packages 10
1-6 PC-based Support Tools 10
1-7 Fast Response Performance 11
1-8 Calibration Selection 11
1-9 Selectable Soft Start 11

Section 2 Installation

2-1 Receipt of Equipment 20
2-2 Recommended Storage Practice 20
2-3 Return Shipment 20
2-4 Transit Precautions 20
2-5 Removal from Storage 21
2-6 Gas Connections 21
2-7 In-Line Filter 21
2-8 Installation 22
2-9 Electrical Interface 25
2-10 Operation Check Procedure (Analog I/O) 28
2-11 Operation Check Procedure (Digital I/O) 29
2-12 Bus/Network (DeviceNet, Profibus, Foundation Fieldbus, EtherCAT) 29

Section 3 Operation

3-1 Features (Standard and Biotech) 30
3-2 Analog I/O Mode of Operation 31
3-3 RS485 Communications Features (Analog versions only) 33
3-4 EtherNET/IP™ Communications Features 33
3-5 DeviceNet Communications Features 32
3-6 Profibus Communications Features 34
3-7 EtherCAT Communications Features 35
3-8 Alarms (Analog versions only) 35
3-9 Alarms (Analog versions only) Configuration Attributes 36
3-10 Diagnostic Alarms (Analog versions only) 37
3-11 General Alarms (Analog versions only) 37
3-12 Calibration/Configuration Sets 38
3-13 Special Features 38
3-14 Setpoint Ramping 39
3-15 Low Setpoint Command Cutoff 39
3-16 Low Flow Output Cutoff 39
3-17 Adaptive Control 39
3-18 Flow Totalizer 39
3-19 PC-based Support Tools 39

Section 4 Maintenance & Troubleshooting

4-1 Troubleshooting Analog or Digital 41
4-2 System Checks 42
4-3 Cleaning Procedures 45
4-4 Calibration Procedure 45

Figures

1-1 General Wiring 11
1-2 Response Performance of Brooks Digital MFC 12
1-3 Linear Ramp-up and/or Ramp-down from 200% Per Second Down to 0.5% Per Second Setpoint Change 12
1-4 SLA5800 Series RS485 15-Pin Analog Connector and Pinouts 13
1-5 SLA5800 Series Profibus Connections and Pinouts 14
1-6 EtherNet/IP™ & PROFINET M8 Power Connection and Pinout 15
1-7 SLA5800 Series DeviceNet Connections and Pinouts 16
1-8 SLA5800 Series EtherCAT Connections and Pinouts 17
1-9 SLA5850/SLA5851/SLA5860/SLA5861 Dimensions 18
1-10 SLA5853/SLA5863 Dimensions 19

2-1 RS485 D-Connector Shielded Cable Hookup Diagram, Voltage I/O Version 25
2-2 Recommended I/O Wiring Configuration for Current Signals (Non-Isolated Power Supply). 26
2-3 Recommended I/O Wiring Configuration for Current Signals (Isolated Power Supply) 26
2-4 RS485 Multidrop Interconnection TMFs and PC 27

3-1 Externally Accessible Adjustment (Zero Button) for all Meters/Controllers 32

4-1 Bench Troubleshooting Circuit 43

Tables

1-1 SLA5800 Series Standard Specifications 6
1-2 SLA5800 Series Biotech Specifications 7
1-3 SLA5800 Series Electrical Specifications 8
1-4 SLA5800 Series Certifications 9

2-1 Recommended Filter Size 21

4-1 Sensor Troubleshooting 43
4-4 Troubleshooting 44

1-1 Purpose

Thank you for purchasing a Brooks Instrument mass flow device. This manual is an installation and operation manual for your instrument. If you have purchased a Brooks® Digital Mass Flow Product with RS485, DeviceNet®, Profibus®,EtherCAT® , EtherNet IP™or PROFINET communications, a separate supplemental manual is also available as part of the operating documentation.

Brooks Instrument mass flow measurement instruments are designed for accurately measuring (MFMs) and rapidly controlling (MFCs) flows of gases. This instruction manual is intended to provide the user with all the information necessary to install, operate and maintain these devices. This manual is organized into the following sections.

Section 1	Introduction
Section 2	Installation
Section 3	Operation
Section 4	Maintenance
Section A	Essential Instructions
Back Cover	Warranty, Local Sales/Service Contact Information

It is recommended that this manual be read in its entirety before attempting to operate or repair these devices.

⚠ CAUTION

It is the user's responsibility to select and approve all materials of construction. Careful attention to metallurgy, engineered materials and elastomeric materials is critical to safe operation.

1-2 Specifications

(Reference Tables 1-1 and 1-2)

⚠ WARNING

Do not operate this instrument in excess of the specifications listed below. Failure to heed this warning can result in serious personal injury and/or damage to the equipment.

⚠ WARNING

When using ANSI/ISA SP-76 downport process connections, refer to substrate manufacturer's operating pressure limits (some substrates are rated lower than 70 bar / 1000 psi).

Table 1-1 SLA5800 Series Standard Specifications

Mass Flow Controller Model	Mass Flow Meter Model	Flow Ranges N_2 Eq. Ratings		Maximum Operating Pressure psi / bar		PED Module H Category
		Min. F.S.	Max. F.S.	Standard[1]	Optional[1]	
SLA5850	SLA5860	0.003 slpm	50 slpm	1500 psi / 103 bar	4500 psi / 310 bar @ Maximum Flow of 10 lpm	SEP
SLA5851	SLA5861	15 slpm	150 slpm[2]	1500 psi / 103 bar	N/A[3]	SEP
SLA5853	SLA5863	100 slpm	2500 slpm	1000 psi / 70 bar	N/A	Category 1 for all 150 lb flanges Category 2 for all other connections

[1] Sanitary fittings - Model code 5A, 5B, 5C, 5D & 5E rated to 500 psi Maximum Pressure
[2] 600 lpm of H_2 possible with decreased accuracy; > 40 psig inlet required for flows greater than 100 lpm N_2 equivalent
[3] 4500 psi / 310 bar available as a special on SLA5861 only

	SLA5850/60	SLA5851/61	SLA5853/63	
Performance				
Full Scale Flow Range (N_2, Eq. 0 °C Ref)	0.003 - 50 slpm	15 - 150 slpm	100 - 1100 slpm	> 1100 - 2500 slpm
Flow Accuracy—17025 Certified Devices (Includes linearity, excludes calibration system measurement uncertainty per SEMI E69)[4]	± 0.6% of S.P. (20 - 100% F.S.), ± 0.12% F.S. (< 20% F.S.)			± 0.6% of F.S.
Flow Accuracy (Includes linearity and calibration system measurement uncertainty per SEMI E69)[4]	± 0.9% of S.P. (20 - 100% F.S.), ± 0.18% of F.S. (< 20% F.S.)			± 1.0% of F.S.
Control Range (Turndown Ratio)	1-100% of Full Scale; 100:1 from 1-50 slpm (2-100% of Full Scale; 50:1 for all other F.S. flows)			
Repeatability & Reproducibility	0.20% S.P			
Linearity	Included in accuracy			
Response Time (Settling Time within ± 2% F.S. for 0 - 100% command step)	< 1 second		< 3 second	
Zero Stability	< + 0.2% F.S. per year			
Temperature Coefficient	Zero: < 0.05% of F.S. per °C Span: < 0.1% of S.P. per °C			
Pressure Coefficient	± 0.03% per psi (0 - 200 psi N_2)			
Attitude Sensitivity	< 0.2% F.S. maximum deviation from specified accuracy after re-zeroing			
Ratings				
Operating Temperature Range	(-14) - 65 °C (7 - 149 °F)[5]			
Minimum Pressure Differential (Controllers)	5 psi / 0.35 bar	10 psi / 0.69 bar	Min.: 7.5 psi / 0.52 bar at 500 lpm	
Maximum Pressure Differential (Controllers)	Application specific up to 4500 psi / 300 bar (limits conditions)[6]	290 psi / 20.0 bar		
Leak Integrity (External)	$1x^{10}$-9 atm. cc/sec He			
Valve Shut Down (Leak-by)[7]	< 1% of F.S. standard; improved shutoff available with Biotech package			
Mechanical				
Valve Type	Normally Closed, Normally Open, Meter			
Primary Wetted Materials	316, 316/316L Stainless Steel, High Alloy, Stainless Steel, Viton® fluoroelastomers, Buna-N, Kalrez®, Teflon®/ Kalrez®, and EPDM			
Diagnostics				
Status Lights	Normally Closed, Normally Open, Meter			
Alarms	Communications protocol dependent. Full set available on EtherNet/IP and PROFINET. See communications manuals for list.			
Diagnostic / Service Port	RS485 via 2.5mm jack			

[4] Accuracy at calibration conditions; accuracy spec valid across the full control range.
[5] Hazardous area certifications have a temperature range limitation of 0 - 65 °C.
[6] > 1500 psi DP as a Special Order.
[7] Metal and Teflon Seats < 5% of full scale.
[8] Alarm modes are dependent on the communications interface. These are described in the corresponding digital communication interface manual.

Table 1-2 SLA5800 Series Biotech Specifications

	SLA5850/60	SLA5851/61	SLA5853/63	
Performance				
Full Scale Flow Range[10] (N_2, Eq. 0 °C Ref)	5 sccm - 50 slpm	15 - 150 slpm[9]	100 - 1100 slpm	> 1100 - 2500 slpm
Gases Supported	Air, CO_2, Nitrogen & Oxygen			
Flow Accuracy (includes linearity and calibration system measurement uncertainty per SEMI E69)[11]	± 0.9% of S.P. (20 - 100% F.S.), ± 0.18% of F.S. (< 20% F.S.)			± 1.0% of F.S.
Repeatability & Reproducibility	0.20% S.P.			
Control Range (Turndown Ratio)	0.4-100% of Full Scale; 250:1	0.4-100% of Full Scale; 250:1	0.7-100% of Full Scale; 150:1	
Response Time	< 1 Second	< 1 Second	< 3 Second	
Zero Stability	< + 0.2% F.S. per year			
Temperature Coefficient	< 0.05% F.S. per °C			
Valve Shut Down (Leak-by)	< 0.005 sccm		< 15.6 sccm	
Ratings				
Inlet Pressure Range	5 psig - 60 psig	10 psig - 60 psig	8 psig - 60 psig	
Minimum Pressure Differential (Controllers)[12]	5 psi / 0.35 bar	10 psi / 0.69 bar	Min.: 7.5 psi / 0.52 bar at 500 lpm Min.: 14.5 psi / 1.00 bar at 1000 lpm Min.: 35.0 psi / 2.41 bar at 2500 lpm	
Maximum Pressure Differential (Controllers)[13]	75 psi / 5 bar			
Maximum Pressure	Same as standard			
Valve Configuration	Standard SLA with Special Factory Tuning / Normally Closed			
Operating Temperature Range	-14 ˚C - 50 ˚C			
Sensor Design	Enhanced construction to meet industry standards for cleanliness			

[9] Maximum flow depends on pressure conditions; consult Applications Engineering for details
[10] Calibration on CO_2 available as an option on SLA5850/60 & SLA5851/61
[11] Accuracy at Calibration Conditions; Accuracy spec valid across the full control range
[12] Performance at minimum inlet pressure will be gas and flow range dependent. Consult Applications Engineering for details
[13] For optimum performance operate at the specified inlet and outlet pressure values

Code Description	Code Option	Option Description
Biotech Options Packages	S	Performance Package[14]
	T	Premium Package[15]
	U	Performance Package with CO2 Calibration[16]
	V	Premium Package with CO2 Calibration[16]

[14] Performance Package must be ordered for basic Biotech model features
[15] Premium Package includes Performance Package features
[16] Not available on SLA5853 or SLA5863

Table 1-3 SLA5800 Series Electrical Specifications

	RS485/Analog	Profibus®	DeviceNet™	EtherCAT®	EtherNet/IP™ & PROFINET
Communication Protocol					
Electrical Connection	1 x 15-pin Male Sub-D, (A)	1 x 15-pin Male Sub-D/ 1 x 9-pin Female Sub-D	1 x M12 with threaded coupling nut (B)	1 x 5-pin M8 with threaded coupling nut 2 x RJ45	1 x 5 pin M8 with threaded coupling nut / 2 x RJ45
Analog I/O	0 - 5 V, 1 - 5 V, 0 - 10 V, 0 - 20 mA, 4 - 20 mA		N/A	0 - 5 V	N/A
Power Max. / Purge	From +13.5 Vdc to +27 Vdc		From +11 Vdc to +25 Vdc	From +13.5 Vdc to +27 Vdc	
Power Requirements Watts, Max.	Valve Orifice > 0.032": 8W Valve Orifice ≤ 0.032": 5W Without Valve: 2W		Valve Orifice > 0.032": 10W Valve Orifice ≤ 0.032": 7W Without Valve: 4W	Valve Orifice > 0.032": 8.5W Valve Orifice ≤ 0.032": 5.5W Without Valve: 2.5W	Valve Orifice > 0.032": 10W Valve Orifice ≤ 0.032": 7W Without Valve: 3W
Web-based Network Settings Interface	N/A				The Default Network Address is 192.168.1.100 EtherNet/IP: Default Network Configuration is DHCP PROFINET: The Default Name is "brooks-sla"

Flow Input (Voltage) Specifications	
Nominal Range	0 - 5 Vdc, 1 - 5 Vdc or 0 - 10 Vdc
Full Range	(-0.5) - 11 Vdc
Absolute Max	18 V (without damage)
Input Impedance	> 990 kOhms
Required Max. Sink Current	0.002 mA

Flow Input (Current) Specifications	
Nominal Range	4 - 20 mA or 0 - 20 mA
Full Range	0 - 22 mA
Absolute Max	24 mA (without damage)
Input Impedance	100 Ohms

Flow Output (Voltage) Specifications	
Nominal Range	0 - 5 Vdc, 1 - 5 Vdc or 0 - 10 Vdc
Full Range	(-1) - 11 Vdc
Min Load Resistance	2 kOhms

Flow Output (Current) Specifications	
Nominal Range	0 - 20 mA or 4 - 20 mA
Full Range	0 - 24.6 mA (@ 0 - 20 mA); 3.8-24.6 mA (@ 4 -20 mA)
Max. Load	380 Ohms (for supply voltage: < 16 Vdc)

Analog I/O Alarm Output[17]	
Type	Open Collector
Max. Closed (On) Current	25 mA
Max. Open (Off) Leakage	1µA
Max. Open (Off) Voltage	30 Vdc

Analog I/O Valve Override Signal Specifications[18]	
Floating / Unconnected	Instrument controls valve to command set point
VOR < 0.3 Vdc	Valve Closed
1 Vdc < VOR < 4 Vdc	Valve Normal
VOR > 4.8 Vdc	Valve Open
Input Impedance	800 kOhms
Absolute Max. Input	(-25 Vdc) < VOR < 25 Vdc (without damage)

[17] The Alarm Output is an open collector or "contact type" that is CLOSED (on) whenever an alarm is active. The Alarm Output may be set to indicate any one of various alarm conditions.

[18] The Valve Override Signal (VOR) is implemented as an analog input which measures the voltage at the input and controls the valve based upon the measured reading as shown in this section.

1-3 Certifications

Table 1-4 SLA5800 Series Certifications

Mark	Agency	Certification	Applicable Standard	Details
c UL us	UL (Recogonized)	Class I, Div 2, Group A, B, C, D Class I, Zone 2, IIC T4 Class II, Zone 22	UL & CSA Standards	E73889 Vol 3, Sec 4
Ex	ATEX	II 3 G Ex ec IIC T4 Gc	EN 60079-0 : 2018 EN 60079-7 : 2015	KEMA 04ATEX 1118X
	IECEx	Ex ec IIC T4 Gc	IEC 60079-0 : 2017 (Ed. 7) IEC 60079-7 : 2015 (Ed. 5)	IECEx DEK 14.0072X
KCs	KOSHA	Ex nA IIC T4		15-AV4BO-0641 15-AV4BO-0640
CE	CE	EMC Directive 2014/30/EU Directive 2011/65/EU	EN:61326-1:2013	EMC RoHS

Note:
1) Not all certifications are available for all SLA5800 specifications and configurations. Please contact Brooks Customer

ATEX/IECEx Specific conditions of use

1. The equipment shall only be used in an area of not more than pollution degree 2, as defined in EN/IEC 60664-1.
2. The modules shall be installed in a suitable enclosure providing a degree of protection of at least IP54 according to IEC/EN 60079-7, taking into account the environmental conditions under which the equipment will be used.
3. Provisions shall be made to prevent the rated voltage from being exceeded by transient disturbances of more than 140%.

UL Conditions of Acceptability

1. These devices are to be used within their ratings.
2. These devices are to be mounted in a suitable enclosure in the end product rated not less than IP40.
3. The wiring terminals are suitable for field wiring.
4. The suitability of the wiring method is to be determined in the end-use application.
5. These devices are intended to be powered by a class 2 power source.
6. These devices were evaluated for use in a maximum ambient temperature of 65ºC.

Note: PROFINET Communications is available only with CE Certification.

1-4 Reference Conditions

Due to effects of pressure and temperature on the compressibility of gases, specific reference conditions must be used when reporting volumetric flow rates in mass flow terms. For example, the unit of measure SCCM (standard cubic centimeters per minute) refers to a volumetric gas flow at a standard reference condition, NOT the actual volumetric gas flow at the actual operating pressure and temperature. The key point is that the MASS FLOW of the gas is fixed, but the reference volumetric flow can be reported differently based upon the standard reference condition used in the calculation.

Throughout the world, there are differences in terminology when describing reference conditions for gases. The words “normal conditions” and “standard conditions” are sometimes used interchangeably to describe the reference STP (Standard Temperature and Pressure) for gases. Further note that temperature and pressure values for standard or normal reference conditions vary in countries and industries worldwide. For example, the Semiconductor Equipment Manufacturing Industry (SEMI) defines standard temperature and pressure conditions as 273.15 K (0 °C) and 101,325 Pa (760 torr). The main concern is that no matter what words are used for descriptive purposes, a gas mass flow rate must have a defined standard pressure and temperature reference condition when performing a volumetric conversion.

1-5 Biotech Options Packages

The SLA58XX mass flow controllers and meters are available with two biotech options packages - Performance and Premium - that include a number of enhanced features designed for the biotech industry and for bioreactors/fermenters specifically. The specifications are shown in Table 1-2. Instructions for changing between the four available gases are included in Section 3 on page 33 of this manual.

1-6 PC-based Support Tools

Brooks Instrument offers a variety of PC-based process control and service tools to meet the needs of our customers. Smart Interface may be used with any unit supporting RS485 S-Protocol in a multidrop configuration, thus allowing users to control and monitor their Brooks devices. The Brooks Expert Support Tool (BEST) may be used to monitor, diagnose, tune and calibrate Brooks devices equipped with DeviceNet communications. The Brooks Expert Support Tool interfaces with Brooks products via a special service port.

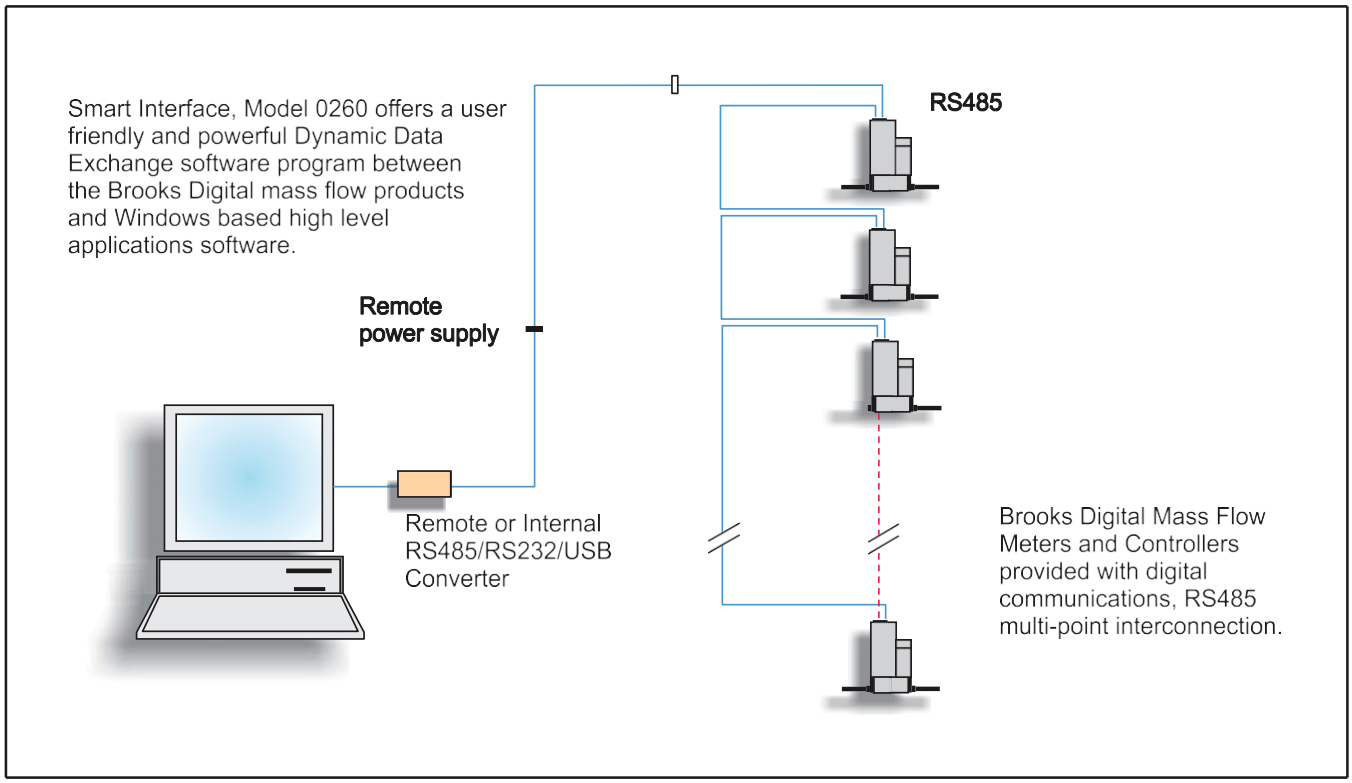

Figure 1-1 General Wiring

1-7 Fast Response Performance

The curves in Figure 1-2 depict the MFC output signal and actual transitional flow to steady-state when gas flow enters into process chamber, under a step response command condition.

Brooks devices also feature adaptive (optimized) PID control, including fast response and linear ramp-up and/or ramp-down control characteristics.

1-8 Calibration Selection

Select one of 6 calibrations via Brooks Expert Support Tool (BEST) or digital signal (See communications protocol for your digital coms). Analog devices can be switched via voltage signals to Pin 11 & 8 on Firmware Version 1.18 & newer.

1-9 Selectable Soft Start

Processes requiring injection of gases can be adversely affected by excessive initial gas flow. This abrupt injection of gas can result in process damage from explosion or initial pressure impact. These problems are virtually eliminated with the soft start feature.

Linear ramp-up or ramp-up/down (Figure 1-3) set by user via software tools or digital commands.

Linear ramp-up/ramp-down is adjustable at 200% per second down to 0.5% per second setpoint change.

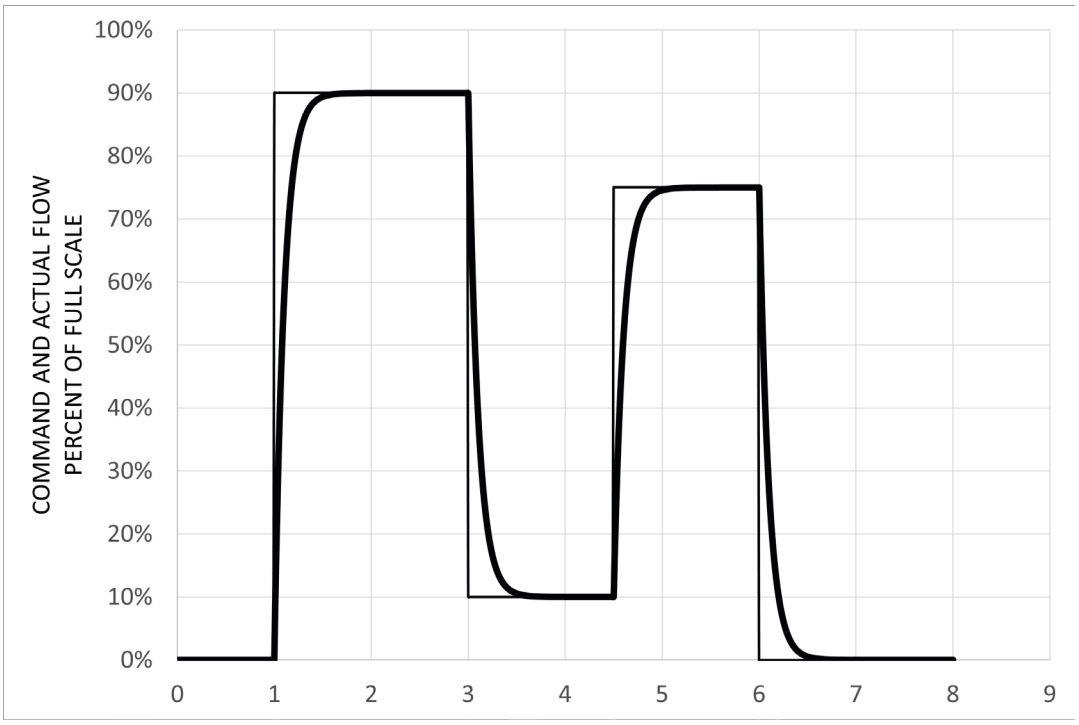

Figure 1-2 Response Performance of Brooks Digital MFC

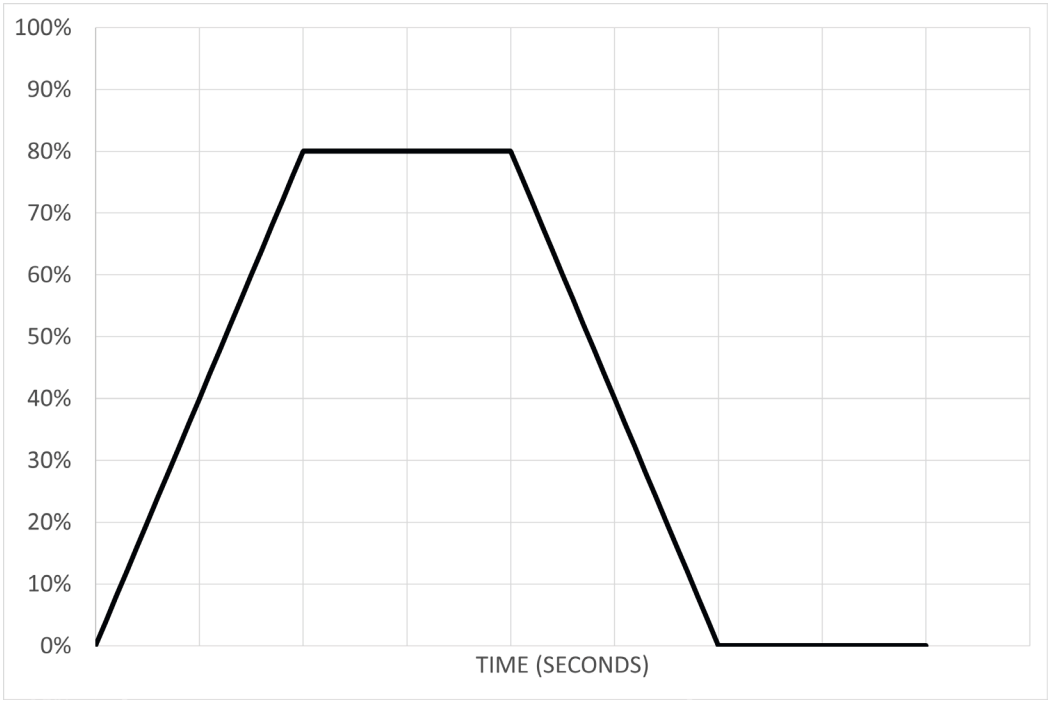

Figure 1-3 Linear Ramp-up or Ramp-up/down from 200% Per Second Down to 0.5 % Per Second Setpoint Change

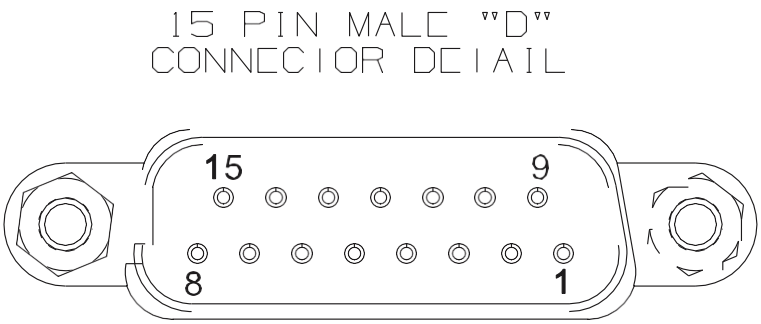

Function	PIN
Setpoint: Common Input (-)	1
Flow Signal: 0(1) -5 Vdc, 0-10 Vdc (Option), Output (+)	2
TTL Alarm: Open collector, Output (+)	3
Flow Signal: 0(4)-20 mA, Output (+)	4
Power Supply: +13.5 Vdc to +27 Vdc(+)	5
Not Connected	6
Setpoint: 0(4)-20 mA, Input (+)	7
Setpoint: 0(1)-5 Vdc, 0-10 Vdc, Input (+)	8
Power Supply: Common (-)	9
Flow Signal: Common, Output, (-)	10
Not Connected	11
Valve Override: Input	12
Auxilliary: RT Input, 0-5 Vdc, 0-10 Vdc, Input (+)	13
RS-485: Common B (-)	14
RS-485: Common A (+)	15

Note: Aux Input is used for Remote Transducer Pressure Controllers only.

Figure 1-4 SLA5800 Series RS485 15-Pin Analog Connector and Pinouts

RS485 Communications

The Brooks Digital Series is equipped with RS485 communication capability. Refer to Figure 1-4 (Analog I/O pin connections), that enables the device to communicate via a personal computer for process control.

Baud rate selections for the Brooks Digital Series related to RS485 are: 1200, 2400, 4800, 9600, 19200 and 38400 baud and can be selected via the Brooks Expert Support Tool (BEST).

The RS485 is essentially a multidrop connection. It allows a maximum of 32 devices to be connected to a computer system. Personal computers are not equipped with RS485 ports as standard. An RS232/USB to RS485 converter or RS485 interface board is therefore required to connect an RS485 network to a standard personal computer. The RS485 bus, a daisy chain network, meaning that the wires are connected at the units as in Figure 1-1.

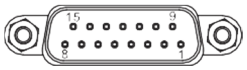

15-PIN SUB-D MALE CONNECTOR	
PIN #	FUNCTION
1	SETPOINT COMMON
2	FLOW OUTPUT (0-5V, 1-5V, 0-10V)
3	ALARM OUT
4	FLOW OUTPUT (0-20mA, 4-20mA)
5	POWER SUPPLY (13.5-27V)
6	NOT CONNECTED
7	SETPOINT INPUT (0-20mA, 4-20mA)
8	SETPOINT INPUT (0-5V, 1-5V, 0-10V)
9	POWER COMMON
10	FLOW OUT COMMON
11	NOT CONNECTED
12	VALVE OVERRIDE INPUT
13	AUX INPUT (0-5V, 0-10V)
14	NOT CONNECTED
15	NOT CONNECTED

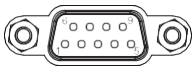

9-PIN SUB-D FEMALE CONNECTOR	
PIN #	FUNCTION
1	NOT CONNECTED
2	NOT CONNECTED
3	RXD/TXD - B - red wire
4	NOT CONNECTED
5	GROUND
6	+5Vdc
7	NOT CONNECTED
8	RXD/TXD - A - green wire
9	NOT CONNECTED

Note: Aux Input is used for Remote Transducer Pressure Controllers only.

Figure 1-5 SLA5800 Series Profibus Connections and Pinouts

Profibus Communications

The Brooks SLA5800 is now equipped to support the Profibus communication protocol. Profibus is a fieldbus-based automation standard of Profibus and Profinet International (PI). Via a single bus cable, Profibus links controller or control systems with decentralized field devices (sensors and actuators) on the field level and also enables consistent data exchange with higher ranking communication systems. A 9-pin sub-D connector is included on every device and is galvanic isolated from the main electronics as defined by the EN 50170 Profibus standard to allow easy network connection separate from the main connector. The main 15-pin sub-D connector or termination board is still needed for the power supply, but also allows for the standard analog I/O signals, analog valve override, and (open-collector) alarm signaling to be used separate from the network connection.

The communication electronics allows for automatic baud rate detection ranging from 9600 baud to 12 Mbaud, thus making the need for any hardware baud rate selection methods not required. For selecting the device address, which must be unique on the network, two rotary switches are provided. This allows a user to easily select any address number ranging from 0 to 126. This can provide fast device replacement without complex network configurations. The Profibus-DP piggyback board is equipped with a zero command pushbutton, allowing the user to give a manual command to the device to (re)balance the flow sensor electronics. This command can also be issued through the protocol.

The Profibus-DP communication option supports the following message types:

- Cyclic data exchange (Write/Read data).
- Read inputs (e.g. status, flow, temperature, totalizer, etc.).
- Read outputs (e.g. commands, setpoint).
- Global control commands (e.g. fail safe, sync).
- Get configuration (i.e. read number of I/O bytes and composition).
- Read diagnostics information (i.e. get error and alarm status).
- Set parameters (i.e. select gas number, engineering units, I/O configuration
- Set parameters (i.e. select gas number, engineering units, I/O configuration etc.).
- Check configuration (i.e. check I/O composition).

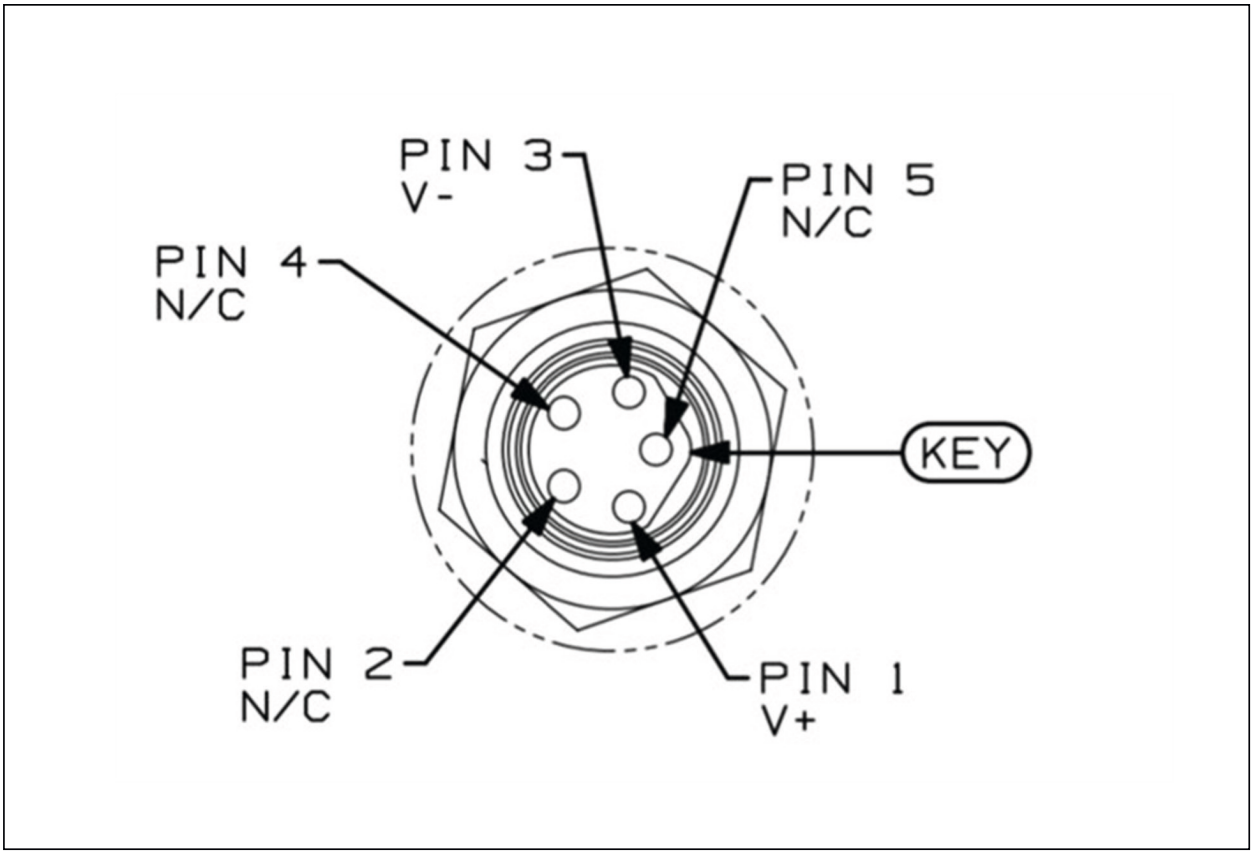

Figure 1-6 EtherNet/IP™& PROFINET M8 Power Connection and Pinouts

EtherNet/IP™ & PROFINET Communications

The SLA5800 Series is now available with the state-of-the-art EtherNet/IP™ communications interface. Please refer to the supplemental EtherNet/IP™ manual for more description of the benefits of Brooks' implementation of the communications platform.

The available physical interfaces on the EtherNet/IP™& PROFINET devices are listed below:

- 5 pin M8 threaded male connector for power and Analog I/O, indicated by pwr".
- In and Out ports with RJ-45 connectors with industry standard pin outs, labeled "1" and "2".
- 2.5mm female jack for RS485 diagnostic port indicated by "DIAG"

Embedded Browser Interface:

- Network address is 192.168.1.100 (EtherNET & PROFINET)
- EtherNET/IP: Network configuration is DHCP.
- PROFINET: The default name is "sla-mfc"

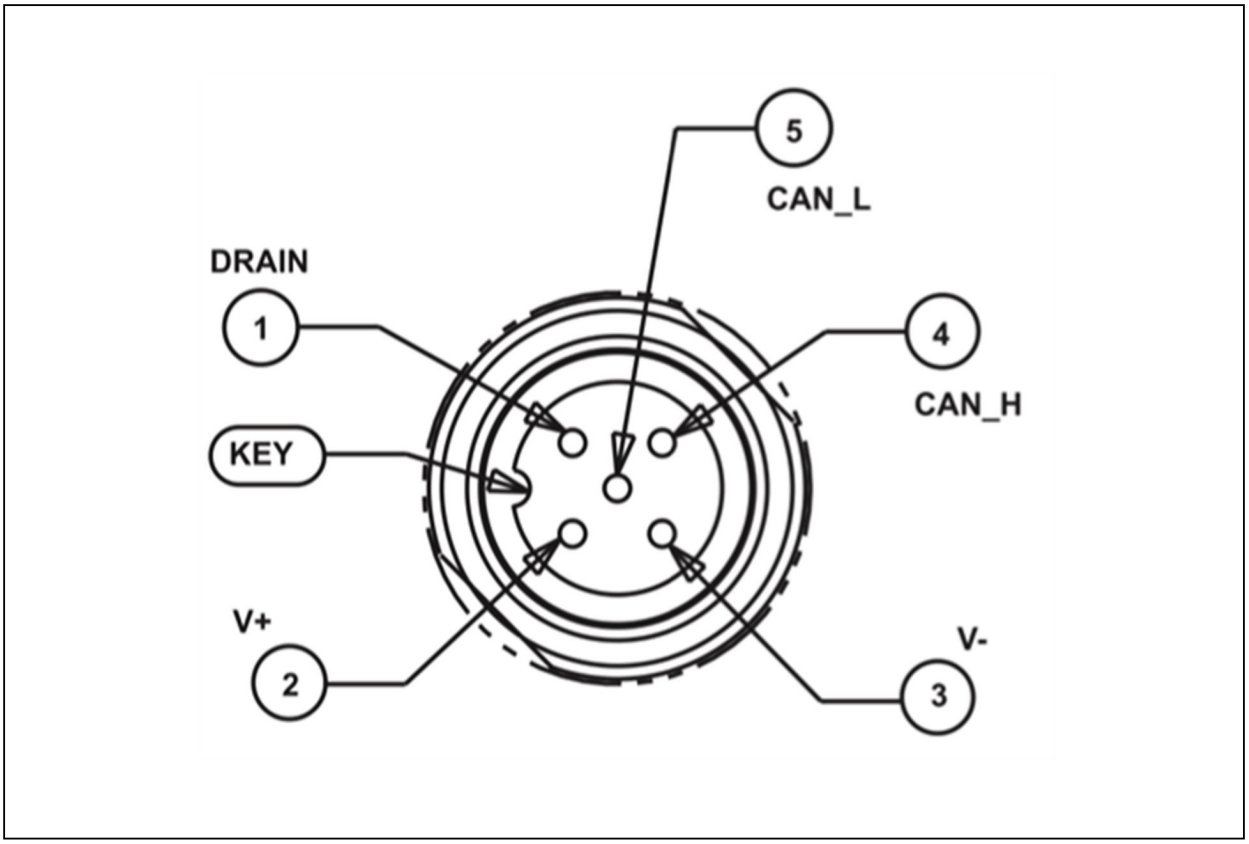

Figure 1-7 SLA5800 Series DeviceNet Connection and Pinouts

DEVICENET BUS 5 PIN MALE M12 CONNECTOR M12 X 1.0 OUTSIDE THREAD

DeviceNet Communications

The SLA5800 Series is also available with DeviceNet™ communication capability. DeviceNet is an open digital protocol capable of high speeds and easy system connectivity. Brooks Instrument has several of its devices available on this popular networking standard, and is a member of ODVA™ (Open DeviceNet Vendors Association), the governing standard body for DeviceNet.

DeviceNet is similar to the RS485 standard in that it is a multi-drop connection that allows a maximum of 64 devices to be connected on the same network. Baud rate selections for DeviceNet products are 125K, 250K and 500K and can be selected via a rate switch mounted on the device.

The DeviceNet communication link also provides access to many of the Brooks SLAMf Digital Series functions for “control and monitor” operations, including:

- Accurate setpoint adjustment and flow output measurement (including units of measure selection)
- PID Settings (controller only)
- Valve Override (controller only)
- Calibration Gas Select
- Soft Start Control (controller only)

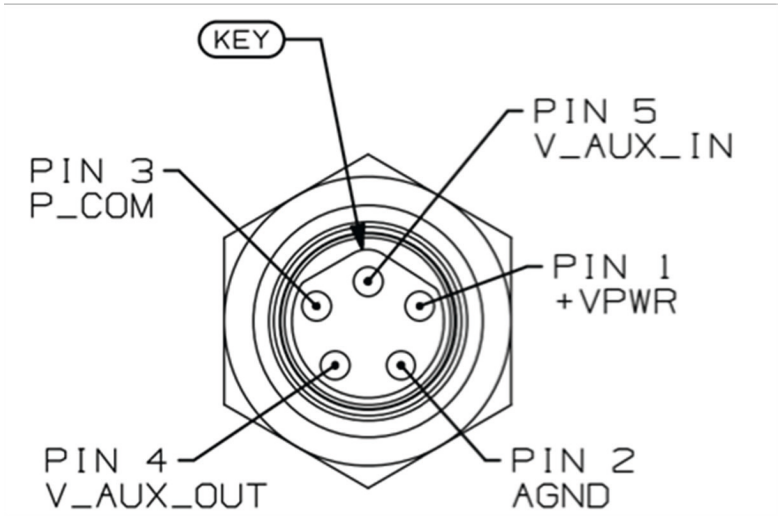

Figure 1-8 SLA5800 Series EtherCAT Connection and Pinout

EtherCAT Communications

The SLA5800 Series is also available with EtherCAT communication capability. Many applications of Flow Controllers/Meters are moving to increase the use of automation. Automation comes in many forms including Ethernet based field buses. Digital communications from these varied systems and the devices they measure and control, are a very effective means of not only accomplishing more effective and rapid system integration, but also providing greatly improved system diagnostics and maintainability.

The available physical interfaces on the EtherCAT device are listed below:

- 5 pin M8 threaded male connector for power and Analog I/O, indicated by “pwr”.
- In and Out ports with RJ-45 connectors.
- 2.5mm female jack for RS485 diagnostic port indicated by “DIAG” (refer to the SLA 5800 Series installation and operation manual for more details) The EtherCAT communication option supports the following message types:
- Cyclic data exchange (Read/Write data)
- Read Inputs (e.g. status, flow, temperature, actuator drive value, etc.)
- Read Outputs (e.g. commands, setpoint, actuator override, etc.)
- Read Diagnostics information (warning & alarm status)
- Check Device configuration
- Calibration due status
- Hardware/Software versions etc.

Figure 1-9 SLA5850/SLA5851/SLA5860/SLA5861 Dimensions

SLA5850/SLA5851/SLA5860/SLA5861

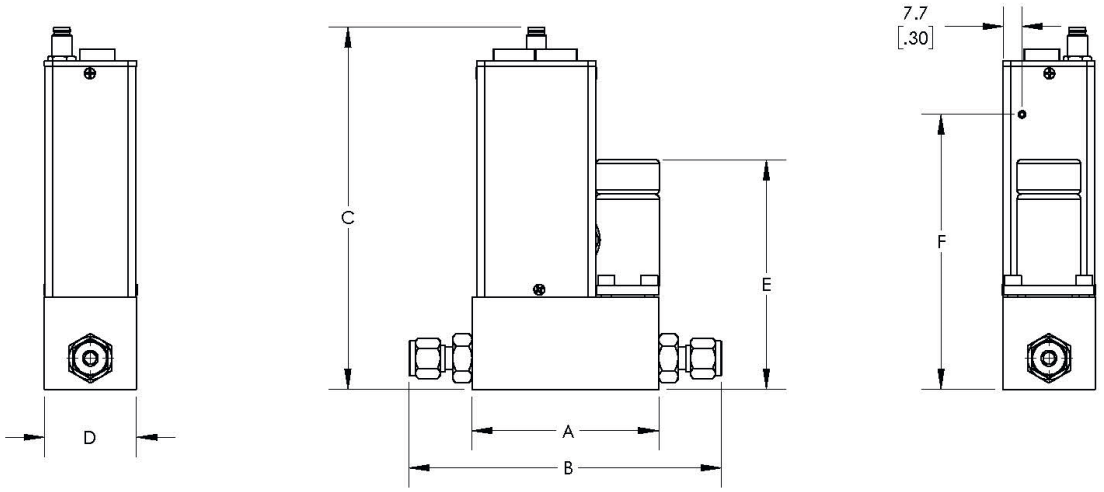

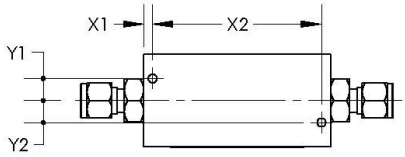

5850

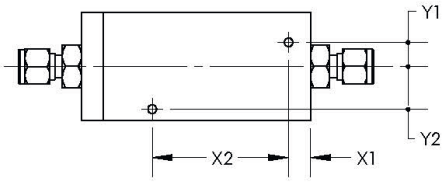

5851/5860/5861

FITTINGS - DIMENSION "B"				
FITTING	50	51**	60	61**
	mm / inch	mm / inch	mm / inch	mm / inch
9/16"-18 UNF	N/A	93.5 / 3.68	N/A	80.0 / 3.15
1/8" Tube COMP.	123.1 / 4.85	N/A	105.3 / 4.15	N/A
1/4" TUBE COMP.*	127.7 / 5.03	144.8 / 5.7	109.9 4.33	131.3 / 5.17
3/8" TUBE COMP.*	130.7 / 5.15	147.9 / 5.82	112.9 4.45	134.4 / 5.29
1/2" TUBE COMP.*	N/A	N/A	117 / 4.61	138.4 / 5.45
1/4" VCO	116 / 4.56	141.3 / 5.56	98.2 / 3.87	119.6 4.71
3/8"-1/2" VCO	127.2 / 5.01	144.3 / 5.68	N/A	N/A
1/4" NPT-F	118.5 / 4.67	133.2 5.24	98.8 / 3.89	122.2 / 4.81
3mm TUBE COMP.*	122.2 / 4.81	135.7 / 5.34	104.4 / 4.11	N/A
6mm TUBE COMP.*	127.8 / 5.03	144.9 / 5.71	110 / 4.33	131.3 / 5.17
10mm TUBE COMP.*	131.1 / 5.16	148.3 / 5.84	113.5 / 4.47	134.9 / 5.31
1/4" VCR	124.1 / 4.89	141.3/5.56	106.3 / 4.19	127.8 / 5.03
3/8"-1/2" VCR	131.7 / 5.19	148.9 / 5.86	113.9 / 4.48	N/A
1/4" RC (BSP)	116.6 / 4.59	133.7 / 5.27	98.8 / 3.89	120.2 / 4.73
1/2" SANITARY	140.5 / 5.53	157.5 / 6.2	122.7 / 4.83	144.0 / 5.67
3/4" SANITARY	140.5 / 5.53	157.5 / 6.2	122.7 / 4.83	144.0 / 5.67

*OVERALL LENGTH FINGER TIGHT
**DEVICES WITH 5848 INLET FILTER WILL BE 2" OR 1.42" LONGER

MOUNTING HOLES				
Model	X1	X2	Y1	Y2
	mm / inch	mm / inch	mm / inch	mm / inch
5850	3.7 / .14	69.0 / 2.72	9.0 / .35	9.0 / .35
5851	9.0/.35	55.7/2.19	9.9/.39	17.4/.68
5860	9.1/.36	40.4/1.59	10.2/.40	10.2/.40
5861	11.7/.46	39.4/1.55	17.3/.68	17.3/.68

ELECTRO/MECHANICAL DIMENSIONS												
Model	A	C						D	E			F
		Analog RS485	Profibus	DeviceNet	EtherCat	ProfiNet/ EtherNet	Foundation Fieldbus		N.C	N.O.	NO VALVE	
	mm / inch	mm / inch	mm / inch	mm / inch	mm / inch	mm / inch	mm / inch	mm / inch	mm / inch	mm / inch	mm / inch	mm / inch
5850	76.4/3.01	137.4/5.41	137.4/5.41	134.1/5.28	148.0/5.83	148.0/5.83	148.0/5.83	37.7/1.48	93.2/3.67	100.3/3.95	45.7/1.80	112.3/4.42
5851	93.5/3.68	143.9/5.66	143.9/5.66	140.5/5.53	154.4/6.08	154.4/6.08	154.4/6.08	44.2/1.74	100.3/3.95	107.8/4.24	52.1/2.05	118.8/4.68
5860	58.6/2.31	137.4/5.41	137.4/5.41	134.1/5.28	148.0/5.83	148.0/5.83	148.0/5.83	37.7/1.48	N/A	N/A	N/A	112.3/4.42
5861	80.0/3.15	143.9/5.66	143.9/5.66	140.5/5.53	154.4/6.08	154.4/6.08	154.4/6.08	44.2/1.74	N/A	N/A	N/A	118.8/4.68

Figure 1-10 SLA5853/SLA5863 Dimensions

SLA5853/SLA5863

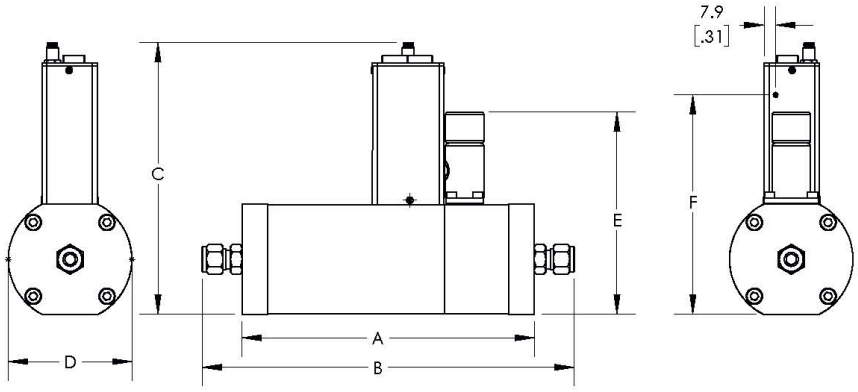

FITTING CONFIGURATIONS

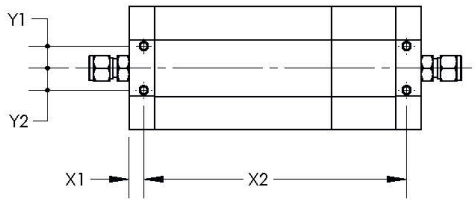

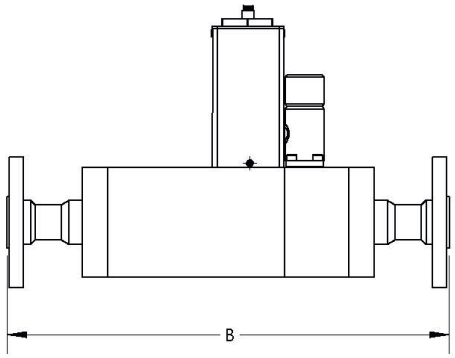

FLANGE CONFIGURATIONS

"B" Dimension		
FITTING	53	63
	mm / inch	mm / inch
9/16"-18 UNF	199/7.8	155/6.1
1-1/16" - 12 UN	199/7.8	155/6.1
1-5/16" - 12UN	199/7.8	155/6.1
3/8" TUBE COMP.*	253/10	209/8.2
1/2" TUBE COMP.*	267/10.5	223/8.8
3/4" TUBE COMP.*	267/10.5	223/8.8
1" TUBE COMP.*	274/10.8	232/9.1
3/8"-1/2" VCO	249/9.8	206/8.1
3/4" VCO	257/10.1	213/8.4
1" VCO	259/10.2	216/8.5
1/2" NPT	199/7.8	155/6.1
1" NPT	199/7.8	155/6.1
1-1/2" NPT	199/7.8	155/6.1
12mm TUBE COMP.*	N/A	219/8.62
3/8"-1/2" VCR	257/10.1	213/8.4
3/4" VCR	279/11	236/9.3
1" VCR	285/11.2	241/9.5
1/2" RC (BSP)	199/7.8	155/6.1
1" RC (BSP)	199/7.8	155/6.1
1/2" SANITARY	262.6/10.34	220/8.64
3/4" SANITARY	262.6/10.34	220/8.64
1" SANITARY	262.6/10.34	220/8.64
ANSI 1/2" 150#	299/11.8	256/10.1
ANSI 1/2" 300#	299/11.8	256/10.1
ANSI 1" 150#	299/11.8	256/10.1
ANSI 1" 300#	299/11.8	256/10.1
ANSI 1.5" 150#	299/11.8	256/10.1
ANSI 1.5" 300#	299/11.8	256/10.1
ANSI 2" 150#	299/11.8	256/10.1
ANSI 2" 300#	299/11.8	256/10.1
DIN DN15 PN40	299/11.8	256/10.1
DIN DN25 PN40	299/11.8	256/10.1
DIN DN40 PN40	299/11.8	256/10.1

*OVERALL LENGTH FINGER TIGHT

MOUNTING HOLES				
Model	X1	X2	Y1	Y2
	mm / inch	mm / inch	mm / inch	mm / inch
5853	10.0/.39	178.8/7.04	15.0/.59	15.0/.59
5863	10.0/.39	135.0/5.32	15.0/.59	15.0/.59

ELECTRO/MECHANICAL DIMENSIONS										
Model	A	C						D	E	F
		Analog RS485	Profibus	DeviceNet	EtherCat	ProfiNet/ EtherNet	Foundation Fieldbus			
	mm / inch	mm / inch	mm / inch	mm / inch	mm / inch	mm / inch	mm / inch	mm / inch	mm / inch	mm / inch
5853	199.0/7.8	174.3/6.86	174.3/6.86	171.0/6.73	184.9/7.28	184.9/7.28	184.9/7.28	84.0/3.31	137.0/5.4	149.2/5.87
5863	155.0/6.1	174.3/6.86	174.3/6.86	171.0/6.73	184.9/7.28	184.9/7.28	184.9/7.28	84.0/3.31	N/A	149.2/5.87

This section provides installation instructions for the Brooks® Digital MFC's and MFM's. Section 1, Figures 1-8 through 1-17 show the dimensions and electrical connections.

2-1 Receipt of Equipment

When the equipment is received, the outside packing case should be checked for damage incurred during shipment. If the packing case is damaged, the local carrier should be notified at once regarding his liability. A report should be submitted to the nearest Brooks Instrument location listed on the Global Service Network page on our website: BrooksInstrument.com/GlobalSupportCenters

Remove the envelope containing the packing list. Carefully remove the instrument from the packing case. Make sure spare parts are not discarded with the packing materials. Inspect for damaged or missing parts.

2-2 Recommended Storage Practice

If intermediate or long-term storage of equipment is required, it is recommended that the equipment be stored in accordance with the following:

a. Within the original shipping container.

b. Stored in a sheltered area, preferably a warm, dry, heated warehouse.

c. 32°C (90°F) maximum, 7°C (45°F) minimum.

d. Relative humidity 45% nominal, 60% maximum, 25% minimum. Upon removal from storage a visual inspection should be conducted to verify the condition of equipment is "as received".

2-3 Return Shipment

Prior to returning any instrument to the factory for any reason, visit our website for instructions on how to obtain a Return Materials Authorization Number (RMA #) and complete a Decontamination Statement to accompany it: BrooksInstrument.com/Service. All instruments returned to Brooks also require a Material Safety Data Sheet (MSDS) for the fluid(s) used in the instrument. Failure to provide this information will delay processing of the instrument.

Instrument must have been purged in accordance with the following:

⚠ WARNING

Before returning the device, purge thoroughly with a dry inert gas such as Nitrogen before disconnecting process connections. Failure to correctly purge the instrument could result in fire, explosion or death. Corrosion or contamination may occur upon exposure to air.

2-4 Transit Precautions

To safeguard against damage during transit, transport the instrument to the installation site in the same container used for transportation from the factory if circumstances permit.

2-5 Removal from Storage

Upon removal from storage, a visual inspection should be conducted to verify the condition of the equipment is “as received.” If the equipment has been in storage in conditions in excess of those recommended (See Section 2-3), the device should be subjected to a pneumatic pressure test in accordance with applicable vessel codes.

2-6 Gas Connections

Prior to installation ensure all piping is clean and free from obstructions. Install piping in such a manner that permits easy access to the instrument if removal becomes necessary.

2-7 In-Line Filter

Unless an integrated (internal) filter is already installed, it is recommended that an in-line filter be installed upstream from the mass flow controller or meter to prevent the possibility of any foreign material entering the flow sensor or control valve MFC. The filtering element should be replaced periodically or ultrasonically cleaned.

Table 2-1 Recommended Filter Size

Models	Maximum Flow Rate	Recommended Filter
SLA5850/60	100 ccm	2 micron
SLA5850/60	500 ccm	2 micron
SLA5850/60	1 to 5 lpm	10 micron
SLA5850/60	10 to 50 lpm	40 micron
SLA5851/61	15 to 100 lpm	40 micron
SLA5853/63	> 100 lpm	Consult factory

Note: Brooks provides many filter options. For those not listed here, please contact factory.

2-8 Installation

⚠ CAUTION

When installing the Mass Flow Controller or Meter, care should be taken that no foreign materials enter the inlet or outlet of the instrument. Do not remove the protective end caps until time of installation.

⚠ CAUTION

Any sudden change in system pressure may cause mechanical damage to elastomer materials. Damage can occur when there is a rapid expansion of fluid that has permeated elastomer materials. The user must take the necessary precautions to avoid such conditions.

Recommended installation procedures:

e. The Brooks Digital MFC or MFM should be located in a clean, dry atmosphere relatively free from shock and vibration.

f. Leave sufficient room for access to Self-zero function push-button.

g. Install in such a manner that permits easy removal if the instrument requires servicing.

⚠ CAUTION

When used with a reactive (sometimes toxic) gas, contamination or corrosion may occur as a result of plumbing leaks or improper purging. Plumbing should be checked carefully for leaks and the instrument purged with clean, dry N_2 before use.

h. The Brooks Digital MFC or MFM can be installed in any position. However, mounting in orientations other than the original factory calibration (see calibration data sheet supplied with the instrument) can result in a<±0.2% maximum full scale shift after re-zeroing.

i. When installing a mass flow controller or meter with full scale flow rates of 10 lpm or greater, be aware that sharp, abrupt angles in the system piping directly upstream of the controller may cause a small shift in accuracy. If possible, have at least ten pipe diameters of straight tubing upstream of the mass flow controller or meter. This is not required for meters with an integrated filter.

⚠ CAUTION

Since the Model SLA5800 control valve may not provide positive shut-off, a separate shut-off valve may be installed downstream for that purpose. It should be noted that a small amount of gas may be trapped between the downstream side of the mass flow controller and the shut-off valve which will result in a surge upon accuation of the shut-off valve. This surge can be reduced in magnitude either by locating the controller and the shut-off valve close together or by moving the shut-off valve upstream of the controller.

Special considerations for high pressure installations

The SLA-Series mass flow devices are capable of operation in high pressure applications. To ensure proper operation the user must be aware of the pressure conditions specified for the device. Inlet and outlet pressure conditions can be found on the device label and calibration sheet. The device was sized and tuned to operate at the specified pressure conditions. If the differential pressure during start up exceeds the specified differential pressure, hydraulic forces may keep the valve from opening and/or controlling properly. In these applications it is important to bring the pressure up in a controlled manner.

One method to assure successful startups is set a 100% setpoint command or valve override open command and then gently ramp the pressure up to operating (specified) conditions. This will allow you to bring your process pressure up to normal operating conditions where the SLA mass flow controller will function as specified.

Another method is to utilize a bypass valve to allow pressure around the device while ramping up the back pressure to normal operating conditions.

Special considerations to be taken when installing the SLA5853 MFC:

The Model SLA5853 has a valve design that is different from the standard low flow Brooks TMFC's. The SLA5853 consists of a dual stage, pilot operated valve. The pilot valve (located on the top of the MFC) controls a differential pressure across the main valve which, in turn controls the flow through the device. The main valve is a pressure operated valve that utilizes a bellows spring and diaphragm to control flow. This bellows and diaphragm assembly can be susceptible to damage by pressure spikes or surges. For this reason, it is recommended that process line startups are handled with care.

The bellows spring is offered in two levels. A low force for low differential pressures (Delta P < 30psig), and a high force (delta P >30 and <300 psig).

The selection of the bellows spring is mainly determined by the differential pressure as specified on the customer order. This should reflect your actual process conditions. The low force bellows consists of a softer bellows spring which is required to allow flow control at lower differential pressures.

During startup conditions, when a process line is being pressurized, the pressure and/or pressure differentials that the SLA5853 is exposed to may be different from the final process conditions. For higher pressure applications, and especially those with the low force bellows, it is important to bring the pressure up in a controlled manner in order to prevent a possible pressure spike to the bellows spring and main valve diaphragm. A pressure spike could deform the bellows, damage the diaphragm or blow out the bellows O-ring seal. This typically results in a failure to shutoff

(leakby at zero setpoint).

One method to assure successful startups is to set a 100% setpoint command or valve override open command and then gently ramp the pressure up to operating conditions. This will allow you to bring your process pressures up to normal process conditions and the SLA5853 will then function as specified.

Another method is to utilize a bypass valve to allow pressure around the device while ramping up pressure to proper operating conditions.

The main point is to not instantly open a ball valve and allow a high upstream pressure or high back pressure surge into the SLA5853 main valve.

Proper process line venting is also important. If operating at pressures greater than 50 psig, be sure to perform a controlled pressure release from inlet and back pressure simultaneously in order to prevent bellows damage from excessive back pressure.

Following careful startup and venting procedures will contribute to a long problem free life of your SLA5853 controller.

Stable Operating Conditions:

As stated above, the SLA5853 model utilizes a pressure operated main valve. Valve performance is dependent on stable system pressures. Oscillating or unstable upstream or downstream pressures are likely to cause the device flow control to become unstable. For the best performance, it is important to create a stable pressure environment by utilizing quality inlet and back pressure regulators in your process design. In many cases, the addition of a back pressure regulator will isolate the SLA5853 from the unstable downstream pressures inherent in many process designs.

All thermal mass flow controllers are factory tested with stable and equal ambient and process temperatures. If the process temperature does not equal the ambient temperature, the bypass ratio/accuracy will be affected. When a hot or cold process fluid is being measured, ensure that the piping system is designed to allow the gas temperature to equalize with the flow controller ambient temperature.

For more information, please contact the Brooks Technical Service group.

Special considerations to be taken when using Sanitary Fittings:

The maximum recommended product rating of 500 psi is based on published product specifications of commonly available sanitary clamps. Brooks does not supply sanitary clamps with the products. Customers shall select the appropriate sanitary clamps and follow the manufacturers installation instructions to achieve the needed pressure ratings

2-9 Electrical Interface

The setpoint signal is supplied as a 0(1) to 5 Vdc, 0 to 10 Vdc or 0(4)-20 mA analog signal. All signals are supplied via the 15-pin D-Connector. For an analog unit the minimum set of connections which must be made to the MFC and MFM includes +13.5 - 27 Vdc, supply common, and a setpoint signal.

The Brooks Digital electrical interface is designed to facilitate low-loss, quiet signal connections. Separate returns (commons) are supplied for the analog setpoint, analog flow signal, and the power supply. These commons are electrically connected together on the PC board.

Analog I/O Versions
- Signal Common
- Signal Output (Voltage or Current)
- +13.5 - 27 Vdc Supply
- Setpoint Input (Voltage or Current)
- Setpoint Common
- Supply Common
- Chassis Ground (via unit body)

Refer to Figures 2-1, 2-2, 2-3, 2-4 and 2-5 for pin connections and electrical I/O connections.

(The Brook's MFC acts as a current sink to a setpoint input signal. The 0/4-20 mA setpoint signal should be "driven" into the MFC input by a controlled current source. Reference Brook's device specifications for the setpoint input impedance.)

(The Brook's MFC acts as the current source when providing a 0/4-20 mA output signal to the load. The output signal is "driven" by the MFC into the customer load. Reference Brook's device specifications for maximum load capacity.)

15 PIN MALE "D"
CONNECTOR DETAIL

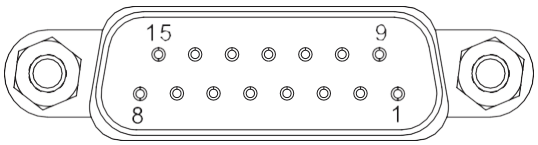

*BROOKS READ OUT SIDE SUB D (15 PIN)	MFC / MFM PIN	FUNCTION	WIRE COLOR
6	1	**Setpoint**, Common Input (-)	BLACK
10	2	**Flow Signal:** 0(1) -5 Vdc, 0-10 Vdc (Option), Output (+)	WHITE
9	3	**TTL Alarm**, Open Collector, Output (+)	RED
2	4	**Flow Signal**, 0(4)-20 mA, Output (+)	GREEN
13	5	**Power Supply**, +13.5 Vdc to +27 Vdc (+)	ORANGE
14	6	**Not Connected**	BLUE
3	7	**Setpoint**, 0(4)-20 mA, Input (+)	WHT/BLK
5	8	**Setpoint:** 0(1)-5 Vdc, 0-10 Vdc, Input (+)	RED/BLK
12	9	**Power Supply**, Common (-)	GRN/BLK
8	10	**Flow Signal**, Common, Output (-)	ORG/BLK
4	11	**Not Connected**	BLU/BLK
7	12	**Valve Override**, Input	BLK/WHT
1	13	**Auxilliary:** RT Input, 0-5 Vdc, 0-10 Vdc, Input (+)	RED/WHT
11	14	**RS-485**, Common B (-)	GRN/WHT
15	15	**RS-485**, Common A (+)	BLU/WHT

* Brooks Read Out Models 0151, 0152, 0154, 0254
See Table 3-1 for Resistor values

Figure 2-1 RS485 D-Connector Shielded Cable Hookup Diagram, Voltage I/O Version

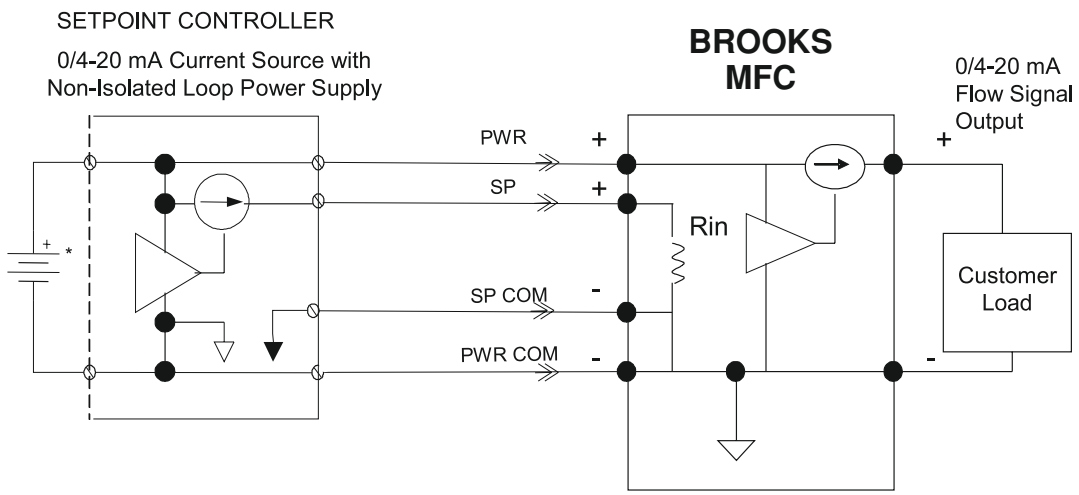

Note: Setpoint common, flow signal output common, and power supply common are connected internally in the MFC. Reference Brook's device specifications for power supply voltage and setpoint input impedance.
Input: The 4/20 mA setpoint signal is "driven" into the MFC input using a controlled source.
Output: The 4/20 mA output signal is "sourced" by the MFC into the customer load.

Figure 2-2 Recommended I/O Wiring Configuration for Current Signals (Non-Isolated Power Supply)

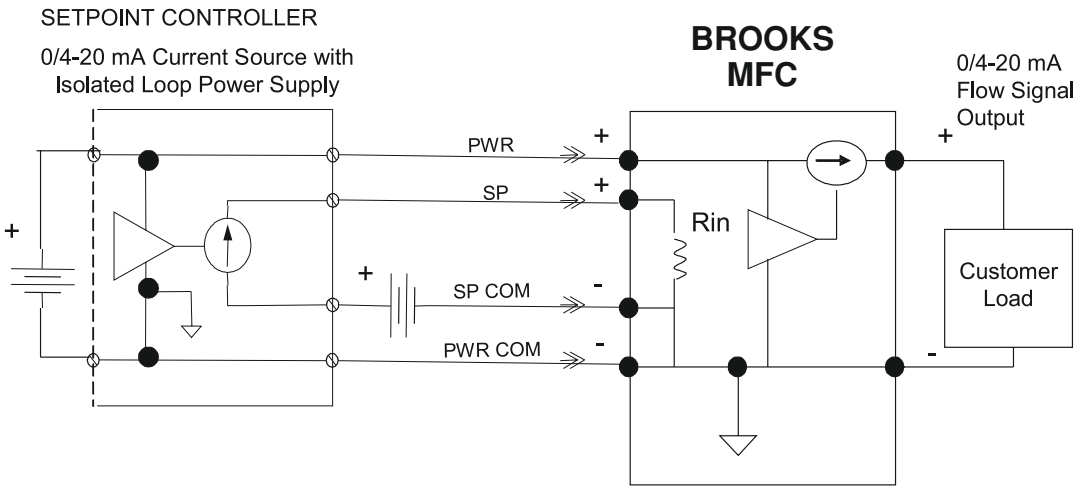

Note: Setpoint common, flow signal output common, and power supply common are connected internally in the MFC. Reference Brook's device specifications for power supply voltage and setpoint input impedance.
Input: The 4/20 mA setpoint signal is "driven" into the MFC input using a controlled source.
Output: The 4/20 mA output signal is "sourced" by the MFC into the customer load.

Figure 2-3 Recommended I/O Wiring Configuration for Current Signals (Isolated Power Supply)

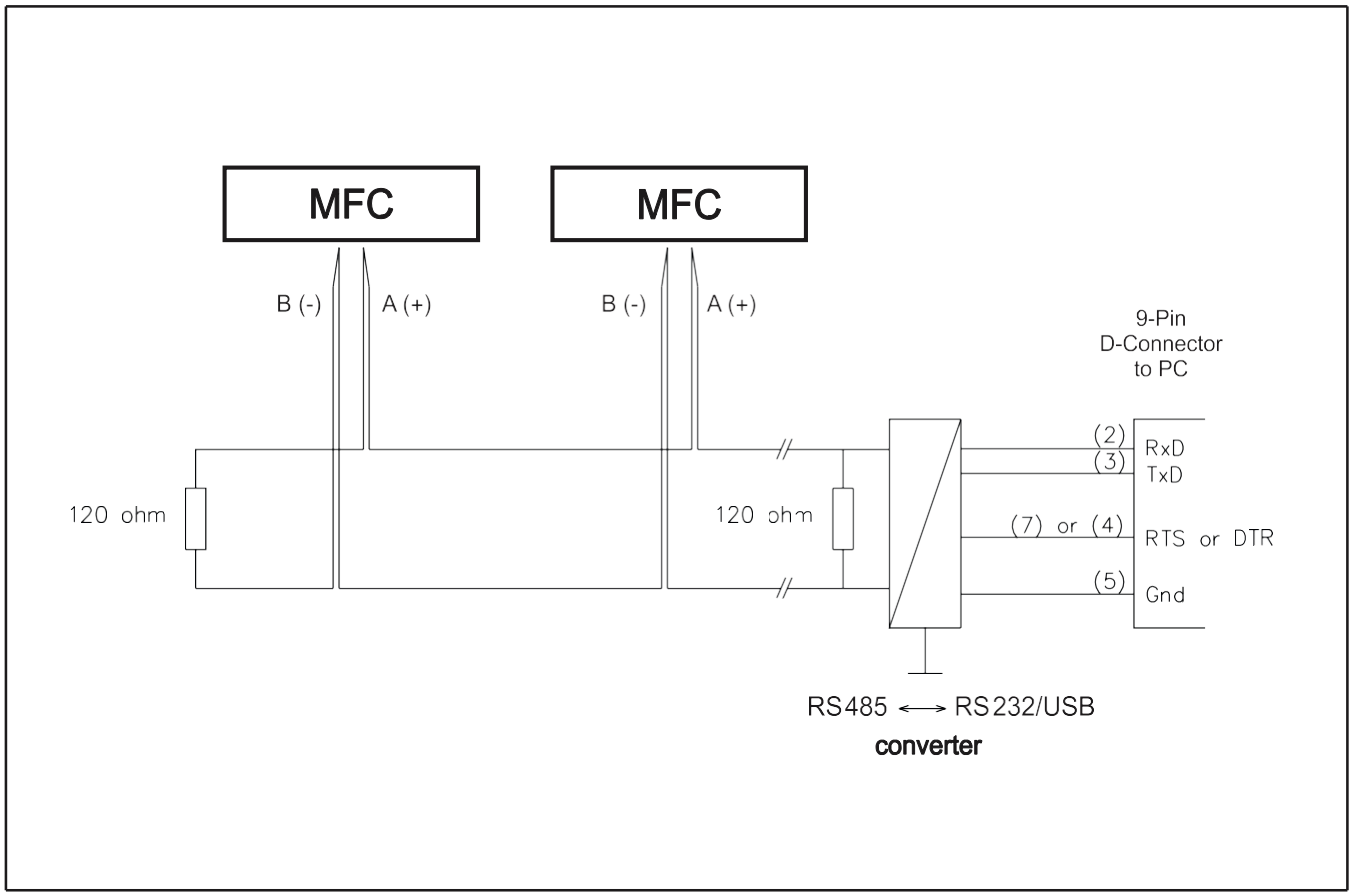

Figure 2-4 RS485 Multidrop Interconnection TMFs and PC

The RS485 is a multidrop connection and allows a maximum of 32 devices to be connected to a computer system. Personal computers are not equipped with RS485 ports as standard. An RS232 to RS485 converter or RS485 interface board is therefore required to connect an RS485 to a standard PC. Figure 2-4 is an interconnection diagram showing two TMFs linked to a PC, via RS485 and RS485 to RS232 converter. The RS485 bus, a daisy-chain network, meaning that the wires are connected at the units as in Figure 2-4.

Protective Earth (PE) Connections:

DeviceNet™: The shield of the cable does not directly short to the device chassis. In order to achieve proper EMC compliance, the device conductive chassis shall be connected to protective earth (PE). The connection can be made via the 8-32 threaded connection on the flow body of the meter/controller.

Ethernet/IP™& PROFINET: The shields of the RJ45 cables do not directly short to the device chassis, per Industry guidelines for an “active device.” The shield of the power cable does directly connect to the device chassis. In order to achieve proper EMC compliance, it is recommended to connect the device conductive to protective earth (PE). The connection can be made via the 8-32 threaded connection on the flow body of the meter/controller.

Other device types: The shields of the power and I/O cables directly connect to the device chassis. In order to achieve proper EMC compliance, it is recommended to connect the device conductive to protective earth (PE). The connection can be made via the 8-32 threaded connection on the flow body of the meter/controller.

2-10 Operation Check Procedure (Analog I/O)

j. Mount the MFC/MFM in its final orientation.

k. Apply power to the MFC/MFM and allow approximately 45 minutes for the instrument to completely warm up and stabilize its temperature.

l. Do NOT supply gas to the MFC/MFM. Ensure that the differential pressure across the MFC/MFM is zero.

m. Apply a setpoint of:

0.000 Vdc ± 10 mV (0 - 5 Vdc or 0 - 10 Vdc setpoint)

1.000 Vdc ± 10 mV (1 - 5 Vdc setpoint)

0.000 mA ± 100 μA (0 - 20 mA setpoint)

4.000 mA ± 100 μA (4 - 20 mA setpoint)

n. If the zero exceeds one of these limits, follow the re-zeroing procedure in Section 3-4. The analog output signal should be:

0.000 Vdc ± 10 mV (0 - 5 Vdc or 0 - 10 Vdc output)

1.000 Vdc ± 10 mV (1 - 5 Vdc output)

0.000 mA ± 40 μA (0 - 20 mA output)

4.000 mA ± 40 μA (4 - 20 mA output)

o. Turn on the gas supply. A positive flow signal may be present due to slight valve leak-thru (MFC only).

p. Supply a setpoint signal between:

0 to 5 Vdc (0 - 5 Vdc setpoint) or 0 to 10 Vdc (0 - 10 Vdc setpoint)

1 to 5 Vdc (1 - 5 Vdc setpoint)

0 to 20 mA (0 - 20 mA setpoint)

4 to 20 mA (4 - 20 mA setpoint)

q. Check the analog output signal. The output signal should match the setpoint signal in accordance with the accuracy specifications provided in Section 1-4 of this document.

r. If flow output signal does not match the setpoint, and pressure settings are correct, this could indicate a problem in the MFC. A secondary issue could be the gas type. When checking with a surrogate gas, ensure that there is enough pressure to the MFC in order to flow the correct amount of the surrogate gas.

Example:

Checking an MFC calibrated for 100 ccm SF6 (sulfur hexafluoride). The sensor factor N_2 (nitrogen) is 0.27, therefore the equivalent N_2 needed is 100/0.27 = 370.4 ccm. This may require a pressure increase to make this flow rate.

2-11 Operation Check Procedure (Digital I/O)

s. Mount the MFC/MFM in its final orientation.

t. Apply power to the MFC/MFM and allow approximately 45 minutes for the instrument to completely warm up and stabilize its temperature.

u. Turn on the gas supply. A positive flow signal may be present due to slight valve leak-thru (MFC only).

v. Provide the proper UOM setpoint between 20% and 100% FS to the MFC via the digital network controller.

w. Check the MFC Flow value. It should match the setpoint UOM. Value within ± 0.2% FS in less than 10 seconds after setpoint change.

x. If flow output signal does not match the setpoint, and pressure settings are correct, this could indicate a problem in the MFC. A secondary issue could be the gas type. When checking with a surrogate gas, ensure that there is enough pressure to the MFC in order to flow the correct amount of the surrogate gas.

Example:

Checking an MFC calibrated for 100 ccm SF6 (sulfur hexafluoride).

The sensor factor N2 (nitrogen) is 0.27, therefore the equivalent N2 needed is 100/0.27 = 370.4 ccm. This may require a pressure increase to make this flow rate.

2-12 Bus/Network (DeviceNet, Profibus, EtherCAT, EtherNET/IP™, PROFINET)

Other problems that may occur in an operational checkout of a Bus/Network MFC could be due to data mismatches of Input/Output I/O assemblies. For proper communication over the Bus/Network network, the MFC must be set up with the same I/O Assembly as the network master. The Bus/Network specification defines Input and Output relative to the network (i.e. the data being PRODUCED from the device (MFC) as an INPUT into the network or the data is being CONSUMED by the device (MFC) is an OUTPUT from the network).

NOTE: For additional EtherNET/IP™, PROFINET, DeviceNet, Profibus, or EtherCAT details, please see Brooks Supplemental Instruction Manuals.

3-1 Features (Standard and Biotech)

Note: Not all features are available on all instruments.

Brooks Instrument digital MFC/MFMs are full-featured devices that perform much like traditional analog MFCs, but with improved accuracy, step response and valve control. The analog interface matches that of Brooks' popular analog MFCs so it can be retrofitted into tools using analog MFCs. Other versions of the Delta Class can provide a variety of digital protocols.

SLA5800 Series Standard

A digital SLA5800 Series Standard MFC is capable of storing up to six different gas pages. Each page (also) includes a calibration curve, PID controller settings, valve performance data, and information about the calibration conditions. The device can contain calibrations for different gases or for the same gas at multiple conditions (pressures, full scale flow rates).

Calibrations will appear in the calibration table in the same order as they appeared on the order, unless otherwise specified. The first listed gas will appear as calibration #1, the second as calibration #2 and so on. Note that unless specified otherwise on the order any unit containing a single calibration will have that calibration stored s calibration #1.

The EtherNET/IP™, DeviceNet, Profibus, EtherCAT and RS485 supplemental manuals describe further details on specific communication features.

SLA5800 Series Biotech

The SLA5800 Series Biotech Devices ships standard with the 4 key BioPhamracuetical industry gases: Air, N2, CO2 and O2. These are included in the standard Performance Package option. The device is sized for the specific gas chosen by the user at time of order, that is the configuration gas. The calibration curves are obtained by use of N2 as a surrogate gas. If actual CO2 gas is chosen, as an extra cost option (for SLA58X0 and SLA58X1 only), then the device is calibrated on CO2 and N2 surrogate for the remaining gases.

Each gas has a "page" that includes a calibration curve, PID controller settings, valve performance data, and information about the calibration conditions. The active gas page will be the Configuration Gas, which will be listed on ordering documents, and the top label of the controller. The other three gas ranges will also be listed on the controller label.

The operator can change the active gas "page" either through the Brooks Expert Support Tool (BEST) software available at BrooksInstrument.com or through the digital communications protocols if the device is so equipped.

When using BEST, the pages will appear in the calibration table in the same order as noted above: Air will appear as calibration #1, N_2 as calibration #2 and so on. For more detailed instructions on how to activate gas pages using BEST, please see the Cal Pages and Flow Cal Pages section of the Installation and Operations manual for BEST, also available at BrooksInstrument.com.

The EtherNET/IP™, DeviceNet, Profibus, EtherCAT and RS485 supplemental manuals describe further details on how to change gases for specific communication features.

3-2 Analog I/O Mode of Operation

The following paragraphs describe the basic features of the Brooks Digital Series Mass Flow Meters/Controllers.

Functional Description

The analog interface may include any of the following I/O options as specified by the user:
0 - 5 Vdc setpoint, 0 - 5 Vdc flow output
1 - 5 Vdc setpoint, 1 - 5 Vdc flow Output
0 - 20 mA setpoint, 0 - 20 mA flow output
4 - 20 mA setpoint, 4 - 20 mA flow output
0 - 10 Vdc setpoint, 0 - 10 Vdc flow output

Also included is the Valve Override input pin. All analog signals available are on the 15 pin D-Connector. (See Fig. 2-1 for connections). The contents of the ten calibrations are determined from the customer order. Only those calibrations ordered will be available in the instrument. Unless otherwise specified, a Brooks Digital MFC/MFM ordered with only one calibration will have that calibration stored in calibration #1.

Before operating the MFC/MFM, apply power and warm-up the instrument for approximately 45 minutes. After warm-up, apply gas pressure then proceed by following the instructions in the following sections.

Analog I/O Setpoint (MFC Only)

This input allows the user to establish the MFC setpoint,. Several input types are available as follows:

Setpoint Signal Type	Full Scale	Minimum Signal	Maximum Signal
0 to 5 Vdc	5 Vdc	0 V	5.5 Vdc = 110%
1 to 5 Vdc	5 Vdc	1 V	5.5 Vdc = 111%
0 to 20 mA	20 mA	0 mA	22 mA = 110%
4 to 20 mA	20 mA	4 mA	22 mA = 111%
0 to 10 Vdc	10 Vdc	0 V	11 Vdc = 110%

Analog I/O Flow Signal

This output is used to indicate the flow signal. The minimum flow output is 0 flow. Several flow signal types are available:

Analog I/O Type	Full Scale	Minimum Signal	Maximum Signal
0 to 5 Vdc	5 Vdc	-0.5 V	5.5 Vdc = 110%
1 to 5 Vdc	5 Vdc	0.5 V	5.5 Vdc = 111%
0 to 20 mA	20 mA	0 mA	22 mA = 110%
4 to 20 mA	20 mA	3.8 mA	22 mA = 111%
0 to 10 Vdc	10 Vdc	0 V	11 Vdc = 110%

Valve Override (MFC Only)

Valve Override Input allows the valve to be forced to its most closed state or its most open state, regardless of setpoint. If this input is not electrically connected, the MFC will operate according to the current values of the other MFC inputs. If this input is held at 0 Vdc or -15 Vdc the valve will be forced to its most closed state. If this input is held at +5 Vdc or greater (max = 24 Vdc), the valve will be forced to its open state.

Zeroing the MFC

It may be desirable to re-zero the flow sensor if it is operated at its temperature extremes or if it is positioned in an attitude other than that specified on the customer order.

To zero the device's sensor:

1. Allow the device to be powered on for 45 minutes so that it achieves its operating temperature.
2. Close the downstream shutoff valve. The device should be full of process gas with no pressure differential.
3. Wait at least 30 seconds for the flow signal to drop to zero.
4. Using the device's Zero pushbutton, zero the device:
   press the pushbutton until the device's Status LED flashes red, then release the pushbutton. A successful zeroing operation is indicated by the Status LED being a steady green. On devices with EtherNET-based communications, there is no zeroing indication provided by the LEDs. The zeroing operation can take up to 10 seconds to complete.

Note: Before zeroing the instrument, zero pressure differential MUST be established across the device. If there is pressure across the instrument during the zero process, any detected flow through the sensor will be misinterpreted as the zero flow reading. This will result in calibration inaccuracy during normal operation. Once zero differential pressure is established and verified, press the recessed, momentary push-button (zero button) located on the side of the device (See Figure 3-2) to start the zero function.

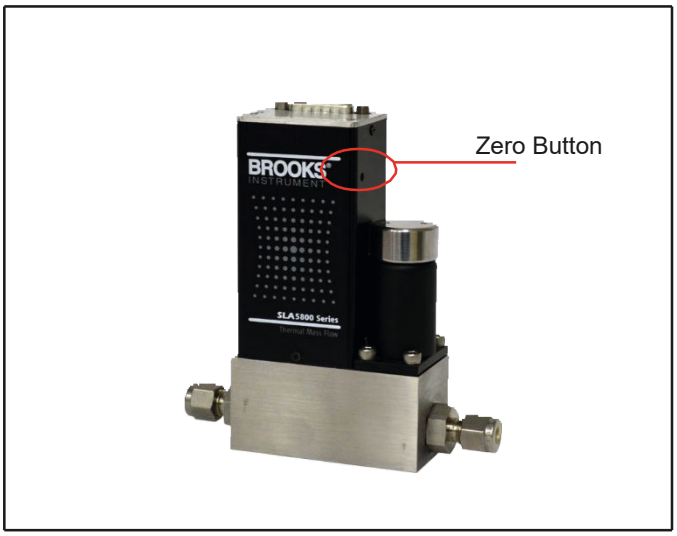

Figure 3-1 Externally Accessible Adjustment (Zero Button) for all Meters/Controllers.

3-3 RS485 Communications Features (Analog versions only)

Digital communication, designed to emulate the Brooks S-series "S-protocol" or pseudo-HART communications is available on the Brooks Digital Series via RS485. This form of multi-drop capable communication provides access to many of the Brooks Digital Series functions for "control and monitor" operations, including:

- Accurate setpoint adjustment flow output measurement (including units of measure selection)
- Valve Override (controller only)
- Flow Totalizer (note that the Current totalizer value is written to EEPROM every 2 hours. After power a power interruption within 2 hours, the totalizer will be restarted from previously stored value)
- Alarm status and settings
- Soft Start Control (controller only)

RS485 equipped units support the following baud rates. Please specify the desired baud rate when ordering (default is 19200 baud). Alternately, baud rate may be changed using the Brooks Expert Support Tool (BEST).

Baud Rates: 1200, 2400, 4800, 9600, 19200 and 38400

Reference the Brooks document "Supplemental Manual for RS485 Communications for Brooks® MFCs/MFMs, for SLA5800/SLAMf Revision B Series" (X-DPT-RS485-SLA5800-SLAMf-Series-RevB-MFC-eng) for more details regarding the capabilities of this communication interface.

3-4 EtherNet/IP™ & PROFINET Communication Features

Brooks Instrument now introduces the state-of-the-art EtherNet/IP™ & PROFINET communications interface on its SLA Series platform.

Please refer to the supplemental EtherNet/IP™ & PROFINET manuals for more description of the benefits of Brooks' implementation of the communications platform.

The available physical interfaces on the EtherNet/IP™ & PROFINET device are listed below:

- 5 pin M8 threaded male connector for power and Analog I/O, indicated by pwr.
- In and Out ports with RJ-45 connectors Labeled "1" and "2".
- 2.5mm female jack for RS485 diagnostic port indicated by 'DIAG'

Embedded Browser Interface:

- Network address is 192.168.1.100 (EtherNET & PROFINET)
- EtherNET/IP: Network configuration is DHCP.
- PROFINET: The default name is "sla-mfc"

3-5 DeviceNet Communications Features

The Brooks SLA5800 Digital Series is also available with DeviceNet™ communication capability. DeviceNet is an open digital protocol capable of high speeds and easy system connectivity. Brooks Instrument has several of its devices available on this popular networking standard, and is a member of ODVA™ (Open DeviceNet Vendors Association), the governing standard body for DeviceNet.

DeviceNet is similar to the RS485 standard in that it is a multi-drop connection that allows a maximum of 64 devices to be connected on the same network. Baud rate selections for DeviceNet products are 125K, 250K and 500K and can be selected via MAC ID switches mounted on the device.

The DeviceNet communication link also provides access to many of the Brooks SLA5800 Digital Series functions for “control and monitor” operations, including:

- Accurate setpoint adjustment and flow output measurement (including units of measure selection)
- PID Settings (controller only)
- Valve Override (controller only)
- Calibration Gas Select
- Soft Start Control (controller only)

3-6 Profibus Communications Features

The communication electronics allows for automatic baud rate detection ranging from 9600 baud to 12 Mbaud, thus making the need for any hardware baud rate selection methods not required. For selecting the device address, which must be unique on the network, two rotary switches are provided. This allows a user to easily select any address number ranging from 0 to 126. This can provide fast device replacement without complex network configurations.

The Profibus-DP communication option supports the following message types:

- Cyclic data exchange (Write/Read data).
- Read inputs (e.g. status, flow, temperature, totalizer, etc.).
- Read outputs (e.g. commands, setpoint).
- Global control commands (e.g. fail safe, sync).
- Get configuration (i.e. read number of I/O bytes and composition).
- Read diagnostics information (i.e. get error and alarm status).
- Set parameters (i.e. select gas number, engineering units, I/O configuration
- Set parameters (i.e. select gas number, engineering units, I/O configuration etc.).
- Check configuration (i.e. check I/O composition).

3-7 EtherCAT Communications Features

The SLA5800 Series is also available with the state-of-the-art EtherCAT communications interface. Many applications of Flow Controllers/Meters are moving to increase the use of automation. Automation comes in many forms including EtherNET based field buses. Digital communications from these varied systems and the devices they measure and control, are a very effective means of not only accomplishing more effective and rapid system integration, but also providing greatly improved system diagnostics and maintainability.

EtherCAT is an EtherNET based communication system and is known for its high cycle time and cost efficient cabling and master application solutions. The available physical interfaces on the EtherCAT device are listed below:

- 5 pin M8 threaded male connector for power and Analog I/O, indicated by “pwr”.
- In and Out ports with RJ-45 connectors.
- 2.5mm female jack for RS485 diagnostic port indicated by “DIAG” (refer to the SLA 5800 Series installation and operation manual for more details)

The EtherCAT communication option supports the following message types:

- Cyclic data exchange (Read/Write data)
- Read Inputs (e.g. status, flow, temperature, actuator drive value, etc.)
- Read Outputs (e.g. commands, setpoint, actuator override, etc.)
- Read Diagnostics information (warning & alarm status)
- Check Device configuration
- Calibration due status
- Hardware/Software versions etc.

Various companies provide EtherCAT master applications, (e.g. TwinCAT from Beckoff), or offer EtherCAT master stacks to develop a master application (e.g. Acontis, A P.C.) can be used to run most EtherCAT master applications but needs dedicated EtherCAT hardware to support the high cycle times and kernel mode operations of the master applications, see www.beckoff.com.

3-8 Alarms (Analog versions only)

This section outlines alarms associated with the Analog versions of the Brooks Digital Series.

For information describing alarms specifically for Brooks DeviceNet units, reference the following supplemental manual:

X-DPT-DeviceNet-SLA5800-SLAMf-Series-RevB-MFC-eng Part Number: 541B190AAG.

For information describing alarms specifically for Brooks Profibus units, reference the following supplemental manual:

X-DPT-Profibus-SLA5800-SLAMf-Series-RevB-MFC-PC-RT-eng Part Number: 541B191AAG.

3-9 Alarms (Analog versions only) - Configuration Attributes

Alarms are a user configurable feature. This feature may be adjusted via the Diagnostics Port using a special software application available from Brooks. Reference the Brooks Expert Support Tool (BEST) User Manual for more information about the Diagnostic Port and software application. Each alarm has the following common user configurable attributes:

Alarm Code - The alarm code specifies the code to be flashed on the LED to indicate that an alarm condition has occurred. When more than one alarm is active, then the LED will indicate the most severe alarm with the highest Alarm Code. Alarm Codes do not have to be unique, i.e., more than one alarm type can use the same alarm code.

Connector Pin 3, on the 15 pin D-Connector also provides an open collector TTL output that will close depending on the alarm situation and the alarm settings for remote monitoring of alarms.

Latching Enable - When an alarm is set to non-latching that means the alarm is indicated only when the monitored value exceeds the specified conditions. When the alarm is set to latching. This means that the alarm will be indicated when the monitored value first exceeds the specified conditions, and will be indicated until the user clears the alarm. If the user clears the alarm while the monitored value still exceeds the specified conditions, then the alarm will be re-latched and continue to be indicated.

Contact Enable - If the alarm condition is detected and the alarm contact is enabled, then the alarm contact (Pin 3) is “closed”.

Low Limit - The value of the monitored value below which is considered an alarm condition. (This attribute not valid for alarms that monitor a state condition of the device.)

High Limit - The value of the monitored value above which is considered an alarm condition. (This attribute not valid for alarms that monitor a state condition of the device.)

Alarm Summary - The following table summarizes the parameters for each alarm and the respective default values.

Alarm	Alarm Code	Low Limit (%)	High Limit (%)	Error	Hours
Diagnostic	12	N/A	N/A	N/A	N/A
High Flow	11	N/A	100	N/A	N/A
Low Flow	10	-1	N/A	N/A	N/A
No Flow Indication	9	N/A	N/A	2	N/A
Setpoint Deviation	8	N/A	N/A	10	N/A
Temperature Out of Limits	7	5	60	N/A	N/A
Totalizer Overflow	7	N/A	N/A	N/A	N/A
Internal Power Supply Failure	6	N/A	N/A	N/A	N/A
Valve Drive Out of Limits	3	0	99	N/A	N/A
Device Calibration Due	2	N/A	N/A	N/A	8760
Device Overhaul Due	1	N/A	N/A	N/A	8760

3-10 Diagnostic Alarms (Analog versions only)

A Diagnostic Alarm will be indicated when any of the diagnostics below detect a failure providing a visual indication via the red LED. The diagnostic test or tests that have detected a problem and caused the Diagnostic Alarm to occur can be determined only by reading alarm status via the Diagnostics Port.

Diagnostic	Failure Description
RAM Test Failure	Byte by byte test of RAM detects bad memory location
Program Memory Corrupt	Checksum failure
Non-Volatile Memory	Byte by byte test of Non-Volatile Memory; detects bad memory location

3-11 General Alarms (Analog versions only)

Several alarms are available to indicate unexpected process control events as follows:

Flow Alarms

Two flow alarms are provided. Each allows the user to set a minimum and maximum flow limit range. Whenever flow is not within the range, the alarm will occur. These two general flow alarms provide more flexibility than having specific low and high flow alarms. These two alarms may be used to create separate low and high flow alarms, or used to provide banding around a flowrate. If the device is a controller, then this alarm is disabled if the setpoint is not within the specified flow limits or if the valve override is active.

No Flow Indication Alarm

The No Flow Indication Alarm will occur when the measurement of flow indicates flow less than a value that can be configured to 0 - 2%. If the device is a controller, setpoint must exceed the configured limit and valve override must not be active for this alarm to occur.

Setpoint Deviation Alarm

The Setpoint Deviation Alarm monitors the difference between Setpoint and Flow and sets the alarm when the difference exceeds the specified limits for more than the specified delay period. The user specifies a minimum and maximum limit in percent of Setpoint. Note that when setpoint =0 and flow = 0, the deviation alarm will show. If this is not desired, the setting AweZeroSetpointDisable=1 disables the alarm. This alarm is also disabled if the valve override is active.

Temperature Out of Limits

The Temperature Out of Limits alarm will occur when the internal temperature is below the low limit or above the high limit.

Totalizer Overflow Alarm

The Totalizer Overflow Alarm will occur when the Flow Totalizer reaches its maximum value and resets to zero. This alarm is permanently configured as a latching type alarm which requires the user to reset the alarm via the Service Port or the RS485 interface.

Internal Power Supply Failure

This alarm will occur when any internally generated power supply voltage falls outside operational limits. Internal supply voltages must be within their nominal limits.

Valve Drive Out of Limits

The Valve Drive Out of Limits alarm will occur when the valve drive is below the low limit or above the high limit.

Device Calibration Due

The Device Calibration Due alarm occurs after the specified elapsed hours indicating that the device requires recalibration. The default setting is 8760 hours, equivalent to one year. The alarm will be cleared either by disabling it or changing the setting.

3-12 Calibration/Configuration Sets

All Flow Calibration parameters and some of the device configuration parameters are saved in the device Non-Volatile Memory as “sets”. Up to 6 sets of calibration/configuration sets can be saved in order to have a unit pre-configured for multiple gas calibration, different pressure conditions, multiple scalings of the same gas.

Calibration and configuration data sets may be adjusted by an advanced user via the Diagnostics Port using a special software application available from Brooks. Reference the Brooks Expert Support Tool User Manual (BEST) for more information about the Diagnostic Port and software application.

Flow Calibration Options

In addition to the factory calibration polynomial, the following calibration options are provided to modify the factory calibration:

- Gas Correction Factor
- Calibration Scaling
- User Calibration Polynomial

Configuration Options

The following configuration parameters are stored in the Calibration/Configuration Sets:

- P, I, and D
- Valve Offset, Span, and Leaktight Offset
- Pole Compensation and filtering

3-13 Special Features

Special Features may be adjusted by an advanced user via the

Diagnostics Port using a special software application available from

Brooks. Reference the Brooks Expert Support Tool User Manual (BEST) for more information about the Diagnostic Port and software application.

3-14 Setpoint Ramping

The following Setpoint Ramping Options are provided:

Off – The device responds immediately to Setpoint changes.

Time – The device will Ramp Flow from the old Setpoint to the new Setpoint in the time specified by the user in seconds.

3-15 Low Setpoint Command Cutoff

When the Setpoint is derived from analog input, the Low Setpoint Command Cutoff parameter sets the minimum valid value of Setpoint. If the Setpoint value reported by the analog input is below the Low Setpoint Command Cutoff parameter value, then the Setpoint will be set to zero.

3-16 Low Flow Output Cutoff

Whenever the measured flow is below the Low Flow Output Cutoff parameter, the Flow Output will be set to zero.

3-17 Adaptive Control

Adaptive Valve Control is a means of dynamically adjusting valve offset and span in response to changing process conditions. Options for Adaptive Control are: On/Off, Adjust Offset Only, Adjust Offset and Span.

3-18 Flow Totalizer

A Flow Totalizer will be provided and maintained in Non-Volatile Memory. The update rate of the totalizer in Volatile Memory will be 5 seconds. Current totalizer value is written to EEPROM every 2 hours. Note that after a power interruption the totalizer will be restarted from previously stored value. For example: if there is a power interruption 10 min before the next scheduled write to EEPROM, any changes made to the totalizer during the previous 1 hour and 50 min interval will be lost; and after power up, it will be reset to previously stored value.

3-19 PC-based Support Tools

Brooks Instrument offers a variety of PC-based process control and service tools to meet the needs of our customers. Smart Interface may be used with any unit supporting RS485 in a multidrop configuration, thus allowing users to control and monitor their Brooks devices. The Brooks Expert Support Tool (Analog I/O versions only) may be used to monitor, diagnose, tune and calibrate Brooks devices. The Brooks Expert Support Tool interfaces with Brooks products via a special diagnostics port.

⚠ WARNING

METER/CONTROLLER SEAL COMPATIBILITY

Products in this manual may contain metal or elastomeric seals, gaskets, O-rings or valve seats. It is the "user's" responsibility to select materials that are compatible with their process and process conditions. Using materials that are not compatible with the process or process conditions could result in the Meter or Controller leaking process fluid outside the pressure boundary of the device, resulting in personnel injury or death.

It is recommended that the user check the Meter or Controller on a regular schedule to ensure that it is leak free as both metal and elastomeric seals, gaskets, O-rings and valve seats may change with age, exposure to process fluid, temperature, and /or pressure.

No routine maintenance is required on the Brooks Digital MFC's and MFM's. If an in-line filter is used, the filtering elements should be periodically replaced or cleaned.

⚠ WARNING

If it becomes necessary to remove the MFC/MFM from the system after exposure to toxic, pyrophoric, flammable or corrosive gas, purge the MFC/MFM thoroughly with a dry inert gas such as Nitrogen before disconnecting the gas connections. Failure to correctly purge the MFC/MFM could result in fire, explosion or death. Corrosion or contamination of the MFC/MFM upon exposure to air, may also occur.

⚠ WARNING

If it becomes necessary to remove the instrument from the system, power to the device must be disconnected.

⚠ CAUTION

It is important that this MFC/MFM only be serviced by properly trained and qualified personnel.

4-1 Troubleshooting Analog or Digital

This section contains suggestions to help diagnose MFC related problems in the gas distribution system and answers commonly asked questions.

Failure of the flow rate or flow signal to achieve setpoint.

1. Insufficient pressure drop across the MFCs (low or no pressure). If there is not enough pressure differential across the MFC, it is impossible for the MFC's orifice to pass the full scale flow rate. To check for this condition, compare the actual inlet/outlet pressure drop with that specified on the order. Increase the pressure if necessary.

2. If pressure settings are correct and flow signal does not match setpoint, a secondary issue could be the gas type. If checking the MFC with a surrogate gas, ensure that there is enough pressure to the MFC in order to flow the correct amount of the surrogate gas. You may have to calculate the equivalent flow using the thermal correction factors. Ex.: a device built and sized for hydrogen will have a small orifice and will be unable to achieve higher flows of a heavier gas such as N_2.

3. Clogged sensor tube. If the MFC sensor tube is clogged, the flow signal will be very low or zero while the actual flow will be at the valve's maximum rate, also, the valve is likely to drive to max opening (100%).

4. Flow signal matched setpoint but, actual flow is not correct. Clogged restrictor. If the MFC's restrictor becomes clogged, a much larger flow stream will pass through the sensor rather than going straight through the restrictor. The symptom of this condition is a substantially reduced actual flow with a flow signal which matches the setpoint.

5. Flow rate in excess of 100% at zero setpoint. Valve Override pin set to open or sensor tube is clogged (see above). If Valve Override (VOR) pin is active, the valve will be forced open or closed. Set this pin to its normal level before setting a setpoint.

6. Flow/Flow signal 'Unstable' Model SLA5800 Series MFC performance is tuned during calibration at the conditions specified on the order. If the conditions in use (inlet and outlet pressure, temperature, attitude, gas or mixture type) are different or become different over time, the MFC may not perform as it did when it left the factory.

Bus System Devices Version Only

7. Failure of the flow rate or flow signal to achieve setpoint.

Specifically for a bus system device MFC, there may be problems associated with the network communication link. One common problem is due to data mismatches of the Input/Output (I/O) Assemblies. For proper communication over a bus system device network, the MFC must be set up with the same I/O assembly as the network master. Confirm these I/O settings are correct.

NOTE: This information and all other detailed DeviceNet information is available in the Brooks DeviceNet Supplement Instruction Manual.

Frequently Asked Questions (FAQ)

Q: What are the purposes of the LEDs on top of the MFC?

A: For EtherNET/IP, PROFINET and DeviceNet, there are two LEDs on top of the MFC. The LED labeled 'MOD' is used to indicate module status (please reference the Brooks DeviceNet, EtherNET/IP™ or PROFINET Supplement Instruction Manual for more detail). This LED should normally be lit steady GREEN: this signifies the MFC is in proper working mode. If the 'MOD' LED is lit steady RED, this signifies a critical fault has occurred in the MFC. Please contact the factory for instructions. The LED labeled 'NET' is used to indicate NETWORK status. Note the 'NET' LED can have 4 distinct operational states for DeviceNet, and 5 distinct states for EtherNET/IP. For more complete details on these LEDs, reference the Brooks DeviceNet, EtherNET/IP™ or PROFINET Supplement Instruction Manual.

Q: What is purpose of the Rotary Switches on top of the MFC?

A: Two of the rotary switches are labeled 'ADDRESS' (DeviceNET only). These two switches are used to configure the MAC ID of the MFC when used on the DeviceNet network. MAC ID stands for Media Access Control Identifier and is used to set the unique address of the device on the network. The possible range of addresses is 00 to 63. The out-of-box MAC ID setting is 63. The third rotary switch is labeled 'RATE'. This switch sets the baud rate of the MFC for communicating over the DeviceNet network. The out-of-box default setting is 125K baud. For more complete details on these switches, reference the Brooks DeviceNet Supplement Instruction Manual.

4-2 System Checks

The Brooks Digital Series Flowmeters and Controllers are generally used as a component in gas handling systems, which can be complex in nature. It can therefore be very difficult to isolate a malfunction in the system. An inaccurately diagnosed malfunction can cause many hours of unnecessary downtime. If possible, perform the following system checks before removing a suspect Mass Flow Meter or Controller for bench troubleshooting or return to the factory. (especially if the system is new):

1. Verify a low resistance common connection and that the correct power supply voltage and signals are present on the connector of the Smart TMF.

2. Verify that the process gas connections have been made correctly, and that they have been tested for leaks.

3. If the Mass Flow Controller appears to be functioning but cannot achieve setpoint, verify that there is sufficient inlet pressure and pressure drop at the controller to provide the required flow.

Bench Troubleshooting

1. Establish a proper connection between the Brooks Digital Series Mass Flow Meter or Controller (using Figure 4-1 as a reference) Switch on the power and allow the instrument to warm-up for 45 minutes. In case of a Controller model, adjust the Setpoint to zero. Do not connect the device to a gas source yet. Observe the output signal and, if necessary, perform the zero adjustment procedure (See Section 3-4 zeroing function). If the output signal does not zero properly, please contact Brooks Instrument.

2. Connect the instrument to a source of the same gas used for it's original calibration. Regulate the Setpoint to 100% flow and adjust the inlet and outlet pressures to calibration conditions. Verify that the output signal reaches its full scale value and stabilizes at that value. Vary the command voltage over the 1 to 100% range and verify that the output signal follows the Setpoint If possible, connect a flow measurement device to monitor the actual flow behavior and verify the accuracy of the mass flow instrument. If the mass instrument performs as described above, then it is functioning correctly and the problem may lie elsewhere.

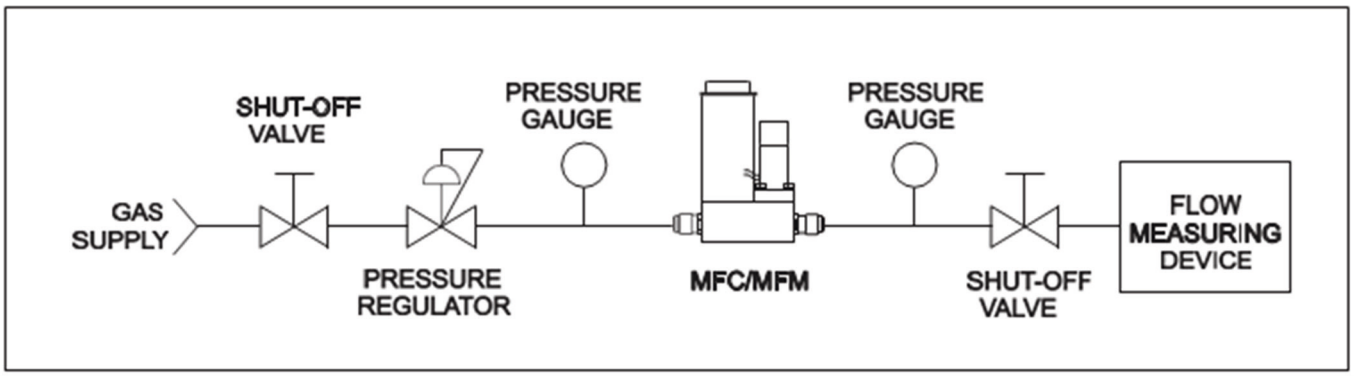

Figure 4-1 Bench Troubleshooting Circuit

Tables 4-1 and 4-2 list possible malfunctions which may be encountered during bench troubleshooting.

For Analog Controller Models Only: Apply +5 Vdc to the valve override pin (pin 12) and verify that the output exceeds 100%. Connect the valve override pin to the power supply common (pin 9) and verify that the output signal falls below 2%.

Table 4-1 Sensor Troubleshooting

SENSOR SCHEMATIC

PIN NO.	FUNCTION
1	Heater
2	Upstream Temperature Sensor (Su)
3	Downstream Temperature Sensor (Sd)
4	Sensor Common
5	Heater Common
6	Thermistor
7	Thermistor

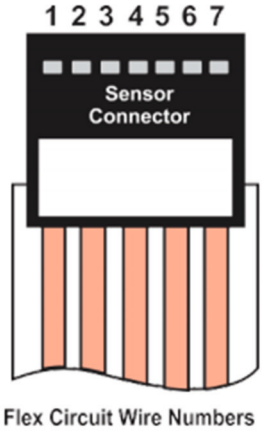

Remove the sensor connector from the PC Board for this procedure.

OHMMETER CONNECTION	RESULT IF ELECTRICALLY FUNCTIONAL
Pin 1 or 4 to meter body	Open circuit on ohmmeter. If either heater (1) or sensor common (4) are shorted, an ohmmeter reading will be obtained.
Pin 4 to Pin 2 Pin 4 to Pin 3	Nominal 1100 ohms reading, depending on temperature and ohmmeter current.
Pin 5 to Pin 1	Nominal 1000 ohm reading.
Pin 6 to Pin 7	Nominal 580 ohm reading.

Table 4-2 Troubleshooting

Trouble	**Possible cause**	**Check/Corrective Action**
Output stays at zero (regardless of Setpoint) and there is flow through the meter/controller	Clogged Sensor	Clean sensor. Refer to cleaning procedures on following pages
	Defective electronic board	Contact Brooks Instrument
Flow cannot be achieved regardless of Setpoint. (applicable to MFC)	Clogged Control Valve	Return the device to the factory
	Valve override input is grounded	Check the valve override input (Pin 12)
	Defective electronic board	Contact Brooks Instrument.
Output signal stays at approx. 5.5 Vdc or 22 mA (regardless of Setpoint) and there is flow through the meter/controller	Valve leaks or is stuck open (applicable to MFC)	Contact Brooks Instrument
	+15 V applied to the valve override input (applicable to MFC)	Check the valve override terminal (Pin 12)
	Defective PC board	Contact Brooks Instrument
Output signal follows Setpoint at higher Setpoints but will not go below 2%	Control valve leaks or is stuck open.	Return the device to the factory
Output signal follows Setpoint at lower Setpoints, but does not reach full scale	Insufficient inlet pressure or pressure drop	Adjust pressures, inspect in-line filters and clean/replace as necessary.
	Partially clogged sensor	Clean sensor, see cleaning procedures on following pages.
	Partially clogged valve (applicable to MFC)	Return the device to the factory, see cleaning procedures
	Valve out of adjustment (applicable to MFC)	Contact Brooks Instrument
	Valve guide spring failure (applicable to MFC)	Contact Brooks Instrument

Instrument grossly out of calibration. Flow is higher than desired.	Partially clogged sensor	Clean sensor, see cleaning procedures on following pages.
Instrument grossly out of calibration. Flow is lower than desired.	Partially clogged restrictor	Replace or clean restrictor
Controller oscillates (applicable to MFC)	Pressure drop or inlet pressure deviates from calibrated values	Adjust pressures to original specifications
	Valve out of adjustment	Contact Brooks Instrument
	Unstable inlet pressure	Check external pressure regulator
	Defective PC board	Contact Brooks Instrument

4-3 Cleaning Procedures

When deposition makes it necessary to clean the Brooks Digital Series Mass Flow Controller or Mass Flow Meter, use the following procedures:

⚠ WARNING

If it becomes necessary to remove the MFC/MFM from the system after exposure to toxic, pyrophoric, flammable or corrosive gas, purge the MFC/MFM thoroughly with a dry inert gas such as Nitrogen before disconnecting the gas connections. Failure to correctly purge the MFC/MFM could result in fire, explosion or death. Corrosion or contamination of the MFC/MFM upon exposure to air, may also occur.

1. Remove the unit from the system.

2. Purge with dry nitrogen gas, which removes virtually all particulate matter from the device. Should contamination persist, subject all wetted[1] components to ultrasonic cleaning. Following this, purge the device thoroughly with dry nitrogen gas once again.

3. If the sensor is contaminated, remove the sensor and use a hemostat or tweezers to push a 0.007” diameter piano wire through the flow-sensor tube to remove any contamination (end closest to the control valve). The sensor tube can then be flushed with a solvent that leaves no residue. This can be accomplished conveniently using a hypodermic needle filled with solvent.

NOTE: Do not soak the sensor assembly in a cleaning solvent. If solvent seeps into the sensor assembly, it will likely damage or significantly alter the sensor’s operating characteristics.

4-4 Calibration Procedure

The calibration of Brooks Digital Series Mass Flow devices is not described in this manual. Such calibration requires accurate and traceable calibration equipment in addition to digital communications.

If your device needs calibration Brooks Instrument can provide this service at one of its service locations. Visit www.BrooksInstrument.com to locate the service location nearest to you. However, if traceable calibration equipment is available at your facility, calibration software, along with training, is available for purchase.

LIMITED WARRANTY

Visit www.BrooksInstrument.com for the terms and conditions of our limited warranty.

BROOKS SERVICE AND SUPPORT

Brooks is committed to assuring all of our customers receive the ideal flow solution for their application, along with outstanding service and support to back it up. We operate first class repair facilities located around the world to provide rapid response and support. Each location utilizes primary standard calibration equipment to ensure accuracy and reliability for repairs and recalibration and is certified by our local Weights and Measures Authorities and traceable to the relevant International Standards.

Visit www.BrooksInstrument.com to locate the service location nearest to you.

START-UP SERVICE AND IN-SITU CALIBRATION

Brooks Instrument can provide start-up service prior to operation when required.
For some process applications, where ISO-9001 Quality Certification is important, it is mandatory to verify and/or (re)calibrate the products periodically. In many cases this service can be provided under in-situ conditions, and the results will be traceable to the relevant international quality standards.

SEMINARS AND TRAINING

Brooks Instrument can provide seminars and dedicated training to engineers, end users and maintenance persons.

Please contact your nearest sales representative for more details.

Due to Brooks Instrument's commitment to continuous improvement of our products, all specifications are subject to change without notice.

TRADEMARKS
Brooks is a trademark of Brooks Instrument, LLC
All other trademarks are the property of their respective owners.

Installation-Manual-SLA5800-EN/541B187AAG/2026-07

Global Headquarters
Brooks Instrument
407 West Vine Street
Hatfield, PA
19440-0903 USA

Toll-Free (USA): 888-554-FLOW
T: 215-362-3500
BrooksAM@BrooksInstrument.com

A list of all Brooks Instrument locations and contact details can be found at www.BrooksInstrument.com

©Copyright 2026 Brooks Instrument, LLC All rights reserved. Printed in U.S.A.

BROOKS® INSTRUMENT
Beyond Measure