Series 275

Mini-Convectron® Vacuum Gauge Module with DeviceNet™ Digital Interface

Instruction Manual

Instruction manual part number 275563

Revision J - January 2020

Series 275

Mini-Convectron® Vacuum Gauge Module with DeviceNet™ Digital Interface

This Instruction Manual is for use with MKS Series 275 Convectron Modules with DeviceNet, catalog numbers 275538 and 275553. A list of catalog numbers for the entire module and replacement gauges is provided on the following page.

Customer Service / Technical Support:

MKS Global Headquarters
2 Tech Drive, Suite 201
Andover MA, 01810 USA
Phone: +1-833-986-1686
Email: insidesales@mksinst.com
Visit our website at www.mksinst.com

Instruction Manual

© 2020 MKS Instruments, Inc. All rights reserved.
Granville-Phillips® and Convectron® are registered trademarks, and mksinst™ is a trademark of MKS Instruments, Inc. All other trademarks and registered trademarks are the properties of their respective owners.

Mini-Convectron® Module with DeviceNet™ Digital Interface

Catalog numbers for Series 275 Mini-Convectron Modules

Mini-Convectron Module with DeviceNet, 2 Digital Setpoints,
and 3-Digit Display. . . . . .**275538 - X X - X**
Mini-Convectron Module with DeviceNet, 2 Digital Setpoints,
and No Digital Display . . . . . .**275553 - X X - X**

Sensor Type:

Gold-Plated Tungsten	G
Platinum	P

Flange/Fitting:

1/8 NPT / 1/2 inch tubulation	P
1/4 inch VCR-type female fitting	Q
1/2 inch VCR-type female fitting	R
NW16KF flange	D
NW25KF flange	E
NW40KF flange	K
1.33 inch (NW16CF) ConFlat-type flange	F
2.75 inch (NW35CF) ConFlat-type flange	G

Measurement Units:

Torr	T
mbar	M
pascal	P

Complete Module

Replacement Convectron Gauges for the 2 modules listed above:

Gold-plated Tungsten Filament

1/8 NPT / 1/2 inch tubulation	275810
1/4 inch VCR-type female fitting	275811
1/2 inch VCR-type female fitting	275864
3/8 inch VCO-type male fitting	275812
1.33 inch (NW16CF) rotatable ConFlat-type flange	275813
2.75 inch (NW35CF) rotatable ConFlat-type flange	275814
NW16KF flange (welded)	275816
NW25KF flange (welded)	275817
NW40KF flange (welded)	275818

Platinum Filament

"X" represents a variable in the catalog number for the replacement gauges.

275572 - P X

1/8 NPT / 1/2 inch tubulation	P
1/4 inch VCR-type female fitting	Q
1/2 inch VCR-type female fitting	R
NW16KF flange	D
NW25KF flange	E
NW40KF flange	K
1.33 inch (NW16CF) ConFlat-type flange	F
2.75 inch (NW35CF) ConFlat-type flange	G
15 mm Tubulation	B

Replacement Gauges

ConFlat® is a registered trademark of Varian Associates.
VCR® is a registered trademark of Swagelok Marketing Co.
DeviceNet™ is a trademark of Open DeviceNet Vendor Association.

Table of Contents

Chapter 1 Safety Instructions 7
1.1 Safety Introduction 7
1.2 Damage Requiring Service 8
1.3 Overpressure Conditions 9
1.4 Warranty Information 10
1.5 Service Guidelines 11
1.6 FCC Verification 11
1.7 Canadian users 11

Chapter 2 Introduction/Specifications **13**
2.1 The Mini-Convectron Gauge Module 13
2.1.1 General Precautions 13
2.2 Module Dimensions 15
2.3 Convectron Gauge Tube Construction 16

Chapter 3 Installation **17**
3.1 Receiving Inspection 17
3.1.1 Damaged Material 17
3.2 Important Considerations for Installation of the Mini-Convectron Module 17
3.3 Mini-Convectron Module Installation 18
3.3.1 Environment 19
3.3.2 Location 19
3.3.3 Gauge Mounts 19
3.4 I/O Connector Wiring 19
3.4.1 Wiring the Process Control Connector 20
3.4.2 Grounding 21
3.5 Configure the Setpoint Relays for the Application 22
3.6 Calibration 22
3.6.1 Atmospheric Pressure Calibration 22
3.6.2 Vacuum Chamber Pressure Calibration 22

Chapter 4 Operation **23**
4.1 Theory of Operation 23
4.2 Panel Indicators and Adjustments 24
4.2.1 Module (MOD) LED Status 26
4.2.2 DeviceNet Network (NET) LED Status 26
4.2.3 Data Rate (Baud Rate) Switches 27
4.2.4 MAC ID Address Switches 27
4.3 Pre-operational Requirements 28
4.4 Preparing for Pressure Measurement 28
4.5 Gas Type 29
4.6 Preparing For Convectron Gauge Operation 29
4.7 Understanding Convectron Gauge Pressure Measurement In Gases Other Than Nitrogen or Air 29
4.7.1 Examples 31
4.8 Adjustment of Convectron Gauge Zero and Atmospheric Pressure Indications 38
4.8.1 Calibrate the Vacuum Reading 38
4.8.2 Calibrate the Atmosphere Reading 38
4.9 Special Considerations for Convectron Gauge Use Below 10^{-3} Torr 39

Chapter 5 DeviceNet Operation **41**
5.1 DeviceNet Digital Interface Setup 41
5.1.1 DeviceNet Protocol and Communication. 42
5.1.2 Configuring Polled I/O Data Format 43
5.1.3 Using Input Polled I/O 43
5.1.4 DeviceNet Error Codes 44
5.1.5 Check Module Status 45
5.2 Process Control Relays 45
5.2.1 Get Relay Trip Points. 48
5.2.2 Get Enable or Disable Status of Relays 48
5.2.3 Get Activation or Deactivation Status of Relays 48
5.2.4 Get Relay Hysteresis. 49
5.3 DeviceNet Protocol for the Mini-Convectron Module 49
5.3.1 Standard Objects 49
5.3.2 Identity Object. 49
5.3.3 DeviceNet Object. 50
5.3.4 Connection Object. 51
5.3.5 Analog Sensor Object 53
5.3.6 Resets 53
5.4 DeviceNet Troubleshooting Procedures 54
5.5 DeviceNet Error Codes 55

Chapter 6 Service and Maintenance **57**
6.1 Service Guidelines 57
6.2 Grounding Guidelines 57
6.3 Damage Requiring Service 58
6.4 Troubleshooting and Repair 59
6.4.1 Symptoms and Possible Causes. 59
6.4.2 Removing a Convectron Gauge from the Module 60
6.4.3 Open the Mini-Convectron Module for Repair 60
6.4.4 Convectron Gauge Test Procedure 61
6.4.5 Cleaning a Contaminated Convectron Gauge. 62
6.4.6 Replacing a Convectron Gauge Tube 63
6.4.7 Baking the Vacuum Chamber with the Mini-Convectron Gauge Attached 63

Chapter 1

Safety Instructions

1.1 Safety Introduction

BEGIN BY READING THESE IMPORTANT SAFETY INSTRUCTIONS AND NOTES collected here for your convenience and repeated with additional information at appropriate points in these instructions.

These safety alert symbols in this manual or on the Product rear panel mean possible danger of electric shock or caution – personal safety or property damage. Read these instructions carefully.

In these instructions the word "product" refers to the Mini-Convectron Module and all of its approved parts and accessories.

NOTE: These instructions do not and cannot provide for every contingency that may arise in connection with the installation, operation, or maintenance of this product. If you require further assistance, contact MKS.

This product is designed and tested to offer reasonably safe service provided it is installed, operated, and serviced in strict accordance with these safety instructions.

Failure to comply with these instructions may result in serious personal injury, including death, or property damage.

These safety precautions must be observed during all phases of operation, installation, and service of this product. Failure to comply with these precautions or with specific warnings elsewhere in this manual violates safety standards of design, manufacture, and intended use of the instrument. MKS Instruments, Inc. disclaims all liability for the customer's failure to comply with these requirements.

The service and repair information in this manual is for the use of Qualified Service Personnel. To avoid shock, do not perform any procedures in this manual or perform any servicing on this product unless you are qualified to do so.

- *Read Instructions* – Read all safety and operating instructions before operating the product.
- *Retain Instructions* – Retain the Safety and Operating Instructions for future reference.
- *Heed Warnings* – Adhere to all warnings on the product and in the operating instructions.
- *Follow Instructions* – Follow all operating and maintenance instructions.
- *Accessories – Do not* use accessories not recommended in this manual as they may be hazardous.

To reduce the risk of fire or electric shock, do not expose this product to rain or moisture.

Objects and Liquid Entry – Never push objects of any kind into this product through openings as they may touch dangerous voltage points or short out parts that could result in a fire or electric shock. Be careful not to spill liquid of any kind onto the products.

Do not substitute parts or modify instrument.

Because of the danger of introducing additional hazards, do not install substitute parts or perform any unauthorized modification to the product. Return the product to a service facility designated by MKS for service and repair to ensure that safety features are maintained. Do not use this product if it has unauthorized modifications.

Proper Grounding:

All components of a vacuum system used with this or any similar high voltage product must be maintained at Earth ground for safe operation. The power cord of this product shall be connected only to a properly grounded outlet. Be aware, however, that grounding this product does not guarantee that other components of the vacuum system are maintained at Earth ground.

Complying with the usual warning to connect the power cable only to a properly grounded outlet is necessary but not sufficient for safe operation of a vacuum system with this or any similar high voltage producing product.

Verify that the vacuum port to which the Mini–Convectron Gauge is mounted is electrically grounded. It is essential for personnel safety as well as proper operation that the envelope of the gauge be connected to a facility ground. Use a ground lug on a flange bolt if necessary.

1.2 Damage Requiring Service

Disconnect the product from all power sources and refer servicing to Qualified Service Personnel under the following conditions:

a. When any cable or plug is damaged.

b. If any liquid has been spilled onto, or objects have fallen into, the product.

c. If the product has been exposed to rain or water.

d. If the product does not operate normally even if you follow the operating instructions. Adjust only those controls that are covered by the operation instructions. Improper adjustment of other controls may result in damage and will often require extensive work by a qualified technician to restore the product to its normal operation.

e. If the product has been dropped or the enclosure has been damaged.

f. When the product exhibits a distinct change in performance. This indicates a need for service.

Replacement Parts – When replacement parts are required, be certain to use the replacement parts that are specified by MKS or that have the same characteristics as the original parts. Unauthorized substitutions may result in fire, electric shock or other hazards.

Safety Check – Upon completion of any service or repairs to this product, ask the Qualified Service Person to perform safety checks to determine that the product is in safe operating order.

Be aware that when high voltage is present in any vacuum system, a life threatening electrical shock hazard may exist unless all exposed conductors are maintained at Earth ground.

This hazard is not peculiar to this product.

Be aware that an electrical discharge through a gas may couple dangerous high voltage directly to an ungrounded conductor almost as effectively as would a copper wire connection. A person may be seriously injured or even killed by merely touching an exposed ungrounded conductor at high potential.

This hazard is not unique to this product.

Install suitable devices that will limit the pressure to the level that the vacuum system can safely withstand. In addition, install suitable pressure relief valves or rupture disks that will release pressure at a level considerably below the pressure that the system can safely withstand.

1.3 Overpressure Conditions

Series 275 Gauges should not be used above 1000 Torr (1333 mbar, 133 kPa, 19 psi) true pressure.

Series 275 instruments are furnished calibrated for N_2. They also measure the pressure of air correctly within the accuracy of the instrument. Do not attempt to use a Series 275 Gauge calibrated for N_2 to measure or control the pressure of other gases such as argon or CO_2, unless accurate conversion data for N_2 to the other gas is properly used.

If accurate conversion data is not used, or is improperly used, a potential overpressure explosion hazard can be created under certain conditions.

A pressure relief valve should be installed in the system if the possibility of exceeding 1000 Torr (1333 mbar, 133 kPa, 19 psi) exists.

Install suitable devices that will limit the pressure from external gas sources to the level that the vacuum system can safely withstand. In addition, install suitable pressure relief valves or rupture disks that will release pressure at a level considerably below that pressure which the system can safely withstand. Suppliers of pressure relief valves and pressure relief disks can be located via an on-line search. ***Confirm that these safety devices are properly installed before installing the product.***

In addition, ensure that:

a. The proper gas cylinders are installed,

b. Gas cylinder valve positions are correct on manual systems, and

c. The automation is correct on automated gas delivery systems. Vacuum gauges with compression fittings may be forcefully ejected if the vacuum system is pressurized.

Using the N_2 calibration to pressurize a vacuum system above about 1 Torr with certain other gases can cause dangerously high pressures which may cause explosion of the system. See Chapter 4, Operation, before using with other gases.

Warning – If used improperly, Mini–Convectron Gauges can supply misleading pressure indications that can result in dangerous overpressure conditions within the system.

Do not operate in an explosive atmosphere.

Do not operate the product in the presence of flammable gases or fumes.

Operation of any electrical instrument in such an environment constitutes a definite safety hazard.

Do not use the product to measure the pressure of explosive or combustible gases or gas mixtures. The sensor wire of the Mini–Convectron Gauge normally operates at only 125 ˚C, but it is possible that Controller malfunction can raise the sensor temperature above the ignition temperature of combustible mixtures.

Danger of explosion or inadvertent venting to atmosphere exists on all vacuum systems which incorporate gas sources or involve processes capable of pressurizing the system above safe limits.

It is the installer's responsibility to ensure that the automatic signals provided by the product are always used in a safe manner. Carefully check manual operation of the system and the set point programming before switching to automatic operation.

Where an equipment malfunction could cause a hazardous situation, always provide for fail-safe operation. As an example, in an automatic backfill operation where a malfunction might cause high internal pressures, provide an appropriate pressure relief device.

1.4 Warranty Information

MKS Instruments, Inc. provides an eighteen (18) month warranty from the date of shipment for new MKS products. The MKS General Terms and Conditions of Sale provides the complete and exclusive warranty for MKS products. This document may be located on our web site at *www.mksinst.com*, or may be obtained by contacting an MKS Customer Service Representative.

1.5 Service Guidelines

Some minor problems are readily corrected on site. If the product requires service, contact the MKS Technical Support Department at +1-833-986-1686. If the product must be returned to the factory for service, request a Return Material Authorization (RMA) from MKS. Do not return products without first obtaining an RMA. In some cases a hazardous materials disclosure form may be required. The MKS Customer Service Representative will advise you if the hazardous materials document is required.

When returning products to MKS, be sure to package the products to prevent shipping damage. Shipping damage on returned products as a result of inadequate packaging is the Buyer's responsibility.

For Customer Service / Technical Support:

MKS Global Headquarters
2 Tech Drive, Suite 201
Andover MA, 01810 USA
Phone: +1-833-986-1686
Email: insidesales@mksinst.com
Visit our website at www.mksinst.com

1.6 FCC Verification

This equipment has been tested and found to comply with the limits for a Class A digital device, pursuant to Part 15 of the FCC Rules. These limits are designed to provide reasonable protection against harmful interference when the equipment is operated in a commercial environment. This equipment generates, uses, and can radiate radio frequency energy and, if not installed and used in accordance with this instruction manual, may cause harmful interference to radio communications. However, there is no guarantee that interference will not occur in a particular installation. Operation of this equipment in a residential area is likely to cause harmful interference in which case the user will be required to correct the interference at his own expense. If this equipment does cause harmful interference to radio or television reception, which can be determined by turning the equipment off and on, the user is encouraged to try to correct the interference by one or more of the following measures:

- Reorient or relocate the receiving antenna.
- Increase the separation between the equipment and the receiver.
- Connect the equipment into an outlet on a circuit different from that to which the receiver is connected.
- Consult the dealer or an experienced radio or television technician for help.

1.7 Canadian users

This Class B digital apparatus meets all requirements of the Canadian Interference-Causing Equipment Regulations.

Cet appareil numerique de la classe B respecte toutes les exigences du Reglement sur le material broilleur du Canada.

2.1 The Mini-Convectron Gauge Module

Unlike traditional thermocouple and Pirani gauges, Convectron gauges take advantage of heat loss due to convection cooling at higher pressures. This extends the range of accurate, repeatable vacuum measurements from less than 1 x 10^{-4} Torr to 1000 Torr (atmosphere) N_2 or air.

The Mini-Convectron module is a self-contained measurement device incorporating Convectron gauge technology and electronics in a compact modular design. The electronics and gauge are packaged in an all-metal package that provides a rugged enclosure and a high level of immunity to electrical noise. The Convectron gauge used in the module is field-replaceable.

The Mini-Convectron module is available in a variety of output configurations. This instruction manual is for use with a Mini-Convectron Module with DeviceNet interface and two pressure-threshold setpoint relays. The adjustable setpoints allow control of valves, switches, alarm signals, or other controls.

This instruction manual covers Mini-Convectron Modules with, and without, digital displays. (275538 = module with digital display; 275553 = module without digital display.)

Within this manual:

- The term “Module” refers to the entire Mini-Convectron Module.
- The term “Gauge” refers to the replaceable Convectron Gauge inside the module.

Figure 2-1 Mini-Convectron Module with DeviceNet Interface

2.1.1 General Precautions

- Do not use the Mini-Convectron Module in an area of high vibration or extreme shock.
- Do not use the Mini-Convectron Module to measure pressures of explosive gases.
- Always be sure that the Mini-Convectron Module and all components of the vacuum system are properly grounded.

Table 2-1 Specifications

Function	Description
Measuring range for Air or N_2 (See Chapter 6 of this instruction manual for correction curves for other gases.)	1 x $1x10^{-4}$ to 1000 Torr Operation in the range of $1x10^{-4}$ to $1x10^{-3}$ Torr will require periodic verification of the zero by reducing system pressure to below 1 x 10^{-5} Torr 1 x 10^{-4} to 1300 mBar 1 x 10^{-2} to 130 KPa
Resolution	1 x 10^{-4} Torr; 1 x 10^{-4} mBar; 1 x 10^{-2} pascal
Mounting position	Horizontal preferred
Power required	+11.5 Vdc to 26.5 Vdc 5.5 watts maximum Protected against reversals, transients or over-voltages
Compliance	CE
IP Rating	IP20
Digital interface	DeviceNet
Baud rate	125K, 250K, or 500K, switch selectable
Setpoint Relays	Single pole, double throw relay, silver alloy - gold clad contacts UL rating: 1 A at 30 Vdc, resistive load or AC non-inductive
Connectors	5-pin Micro 9-pin D male
Ambient operating temperature range	0 °C to +40 °C (non-condensing)
Non-operating temperature range	-40 °C to +70 °C
Bakeout temperature range with electronics module attached (non-operating)	85 °C max.
Package	Aluminum extrusion design with aluminum end plates 4.5″ long x 1.7″ wide x 2.5″ high plus gauge port and fitting
Weight	340gm (12 oz) with 1/8 NPT fitting
Gauge tube internal volume	40 cc (2.5 cu in.)
Sensor wire	Platinum or Gold-plated Tungsten
Gauge tube replacement	Field replaceable using a Phillips screwdriver and a 3/16" nut driver or socket

Table 2-2 Gauge Powered by DeviceNet

Input Voltage	Surge Current	Operating Current	Pin Connection
26 Vdc	1.5 A, 8 ms	0.2 A	Pin 2 = +Vdc Pin 3 = -Vdc
11 Vdc	2.5 A, 8 ms	0.5 A	Pin 2 = +Vdc Pin 3 = -Vdc

2.2 Module Dimensions

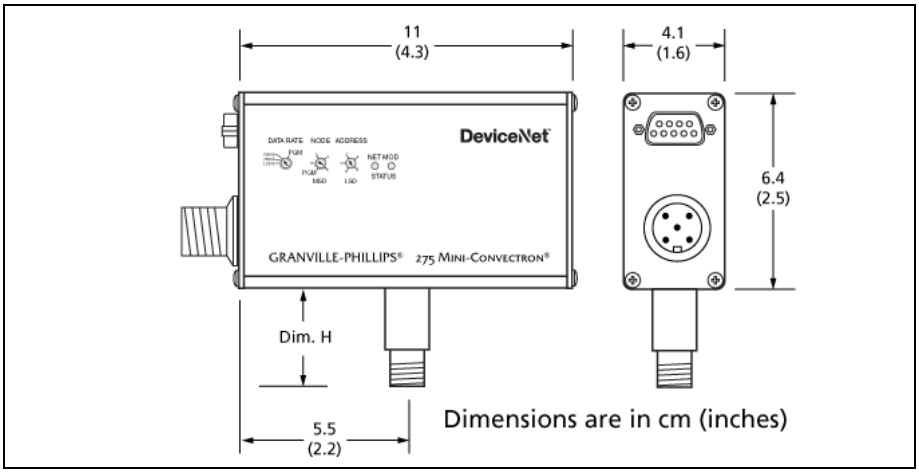

Figure 2-2 DeviceNet Mini-Convectron Module Dimensions

Table 2-3 Fitting/Flange Dimensions

Fitting		Description	Dimension H
	1/8 NPT pipe thread 1/2 inch compression fitting	1/8 NPT pipe thread / 1/2 inch tubulation	2.2 cm (0.9 in.)
	VCR-type female fitting	1/4 inch VCR-type female fitting (standard) 1/2 inch VCR-type female fitting	3.0 cm (1.2 in.) 3.9 cm (1.5 in.)
	ConFlat-type flange	1.33 inch (NW16CF) ConFlat-type 2.75 inch (NW35CF) ConFlat-type	3.9 cm (1.5 in.) 3.9 cm (1.5 in.)
	KF flange	NW16KF flange NW25KF flange NW40KF flange	3.1 cm (1.2 in.) 3.1 cm (1.2 in.) 3.9 cm (1.5 in.)

2.3 Convectron Gauge Tube Construction

The transducer is a convection enhanced Pirani gauge providing rapid response, six-decades of pressure transduction, stable calibration, and good accuracy. The Pirani sensing element, R1 of the schematic of Figure 2-3, is one leg of a Wheatstone Bridge. A temperature compensating network, R2, forms the second leg of the bridge. The temperature sensitive component of this network is mounted inside the gauge tube envelope with the sensor. All other resistors of the bridge are mounted upon the exterior electrical feed through pins of the gauge tube. Pin 4 serves as an electrical terminal for construction of the compensating network, R2, but no connection is made from the controller.

All materials are compatible for ultra high vacuum service, corrosion resistance and bakeability to 150 °C. The gauge tube envelope is type 304 stainless steel. All metallic joints in the envelope are welded. No solder is used within the envelope. The following materials are exposed to the vacuum: Type 304 stainless steel, Carpenter Alloy 52, Kovar, Kapton®, gold-plated Tungsten (or Platinum) and borosilicate glass.

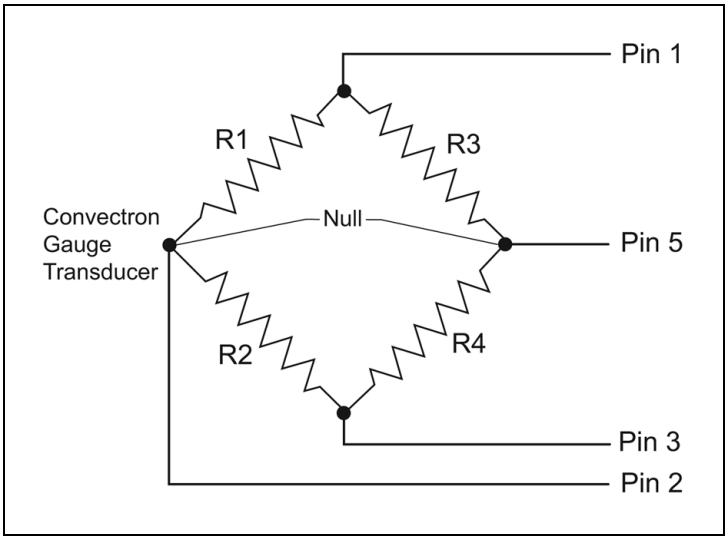

Figure 2-3 Convectron Gauge Tube Schematic

Installation

3.1 Receiving Inspection

Inspect all material received for shipping damage. Confirm that the shipment includes all material and options ordered. If materials are missing or damaged, the carrier that made the delivery must be notified within 15 days of delivery in accordance with Interstate Commerce regulations to file a valid claim with the carrier. Any damaged material including all containers and packing should be held for carrier inspection. Contact MKS Customer Service Department if the shipment is not correct for reasons other than shipping damage.

3.1.1 Damaged Material

Any damaged material, including all containers and packaging, should be held for carrier inspection. If the shipment is not correct for reasons other than shipping damage, contact MKS Customer Service Department.

3.1.1.1 International Shipments

If an airfreight forwarder handles the shipment and their agent delivers the shipment to customs the claim must be filed with the airfreight forwarder.

If an airfreight forwarder delivers the shipment to a specific airline and the airline delivers the shipment to customs the claim must be filed with the airline, *not* the freight forwarder.

3.2 Important Considerations for Installation of the Mini-Convectron Module

- It is recommended that the Mini-Convectron be installed with the port oriented vertically downward to ensure that no system condensates or other liquids collect in the gauge tube. The gauge tube axis must be horizontal if it is to be used at pressures above 1 Torr. Although the gauge tube will read correctly below 1 Torr when mounted in any position, erroneous readings will result at pressures above 1 Torr if the gauge tube axis is not horizontal.
- Do not use a compression mount (quick connect) for attaching the Mini-Convectron to the system in applications resulting in positive pressures in the gauge tube. Positive pressures might blow the gauge tube out of a compression fitting and damage equipment and injure personnel. Pipe thread or flange mounting systems should be used for positive pressure applications. In any case, the absolute pressure in the gauge tube should not exceed 1000 Torr.
- Do not perform electrical continuity tests on the Mini-Convectron gauge tube with instruments applying voltages in excess of 1 volt when the gauge tube is at vacuum, or 5 volts when at atmospheric pressure. Exceeding these voltages will damage the sensing element.
- Keep the gauge tube clean. Do not remove the mounting port cover until you are ready to install the gauge tube.
- Do not mount the Mini-Convectron in a manner that allows deposition of process vapors onto the internal surfaces of the gauge tube through line-of-sight access to the interior of the gauge tube.
- Do not install the Mini-Convectron where high amplitudes of vibration are present. Excessive vibration will cause forced convection at high pressure giving erroneous readings.
- Do not bake the Mini-Convectron Module at temperatures exceeding 85 °C.

- Do not install the Mini-Convectron where it will be subject to corrosive gases such as mercury vapor or fluorine which will attack the gold plated sensor.
- Do not use the Mini-Convectron to measure pressures of explosive gases.
- For greatest accuracy and repeatability the Mini-Convectron should be located in a stable room temperature environment.
- All connections to the unit are to be made with shielded cable or cables. The shield or shields are to be connected to the connector shell.

3.3 Mini-Convectron Module Installation

Before installing the Mini-Convectron Module, install appropriate pressure relief devices in the vacuum system that will limit the pressure from external gas sources to the level that the vacuum system can safely withstand. Suppliers of pressure relief valves and pressure relief disks can be located via an on-line search. ***Confirm that these safety devices are properly installed before installing the product.***

Operating the module above 1000 Torr (1333 mbar, 133 kPa) true pressure could cause pressure measurement error or product failure. Install suitable devices that will limit the pressure to the level that the vacuum system can safely withstand. In addition, install suitable pressure relief valves or rupture disks that will release pressure at a level considerably below the pressure that the system can safely withstand.

Dimensions of the Mini-Convectron Module are given in Figure 2-2 on page 15.

Cleanliness pays. Keep the port cover in place until moments before installation.

For proper operation above about 1 Torr, install Mini-Convectron Modules with the gauge axis horizontal. See Figure 3-1. Although the gauge will read correctly below 1 Torr when mounted in any position, erroneous readings will result at pressures above 1 Torr if the gauge axis is not horizontal.

Orient the gauge to prevent condensation of process vapors on the internal surfaces through line-of-sight access to its interior. If vapor condensation is likely, orient the port downward to help liquids drain out of the gauge.

Vibration causes convection cooling of the sensor and will result in high pressure readings. Mount Mini-Convectron Module where it will not vibrate excessively.

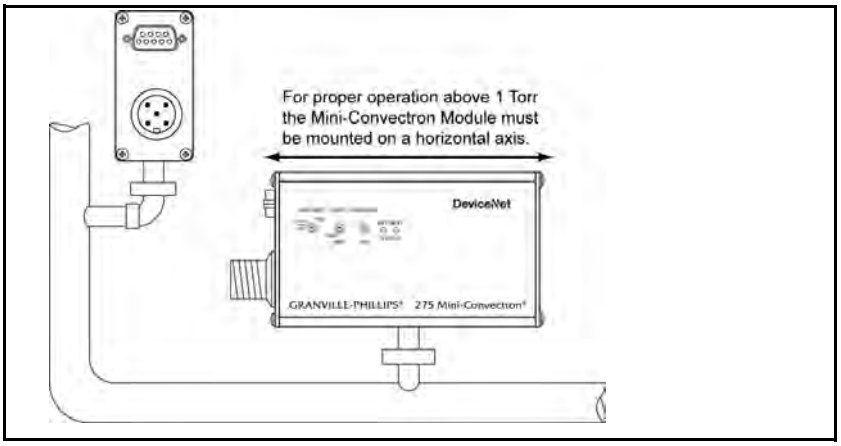

Figure 3-1 Recommended Convectron Gauge Orientation

3.3.1 Environment

To minimize temperature effects, locate pressure gauges away from internal and external heat sources, in an area where the ambient temperature is reasonably constant.

3.3.2 Location

Where you mount the Mini-Convectron Module is critical to obtaining reliable pressure measurements. Long tubing or other constrictions can cause large errors in pressure readings. If the gauge is mounted near the pump, the pressure in the gauge may be considerably lower than in the rest of the system. If the gauge is mounted near a gas inlet or other source of contamination, the pressure in the gauge may be much higher than in the rest of the system.

3.3.3 Gauge Mounts

Dimensions of the Mini-Convectron Module and the flange fittings are given in Section 2.2 on page 15.

3.3.3.1 Compression Mount/Quick Connect

Do not use for positive pressure applications. The gauge may be forcefully ejected. The gauge port is designed to fit a standard 1/2 in. compression/quick connect mounting such as an Ultra-Torr fitting. Insert the gauge tube port into the compression fitting and finger-tighten the press ring. A light film of vacuum grease, such as Apiezon®, will ensure sealing.

3.3.3.2 1/8 NPT Mount

Fits standard 1/8 NPT female fitting. Wrap the threads of the gauge port with thread seal tape and hand tighten. Do not use a wrench or tool. Tighten only enough to achieve a seal.

3.3.3.3 NW or Flange Mount

The KF mounting system requires O-rings and centering rings between mating flanges. Tightening the wing nut will hold the flanges and the aluminum flange clamp together. Maximum pressure for this style of mounting system is 1000 Torr absolute.

3.3.3.4 ConFlat Flange

To minimize the possibility of leaks with ConFlat® flanges, use high strength stainless steel bolts and a new, clean OFHC copper gasket. Avoid scratching the seal surfaces. To avoid contamination, do not use nonmetal gaskets.

Finger tighten all bolts. Use a wrench to continue tightening $^1/_8$ turn at a time in crisscross order, e.g., 1, 4, 2, 5, 3, 6, 4 until all flanges are in contact. After contact, further tighten each bolt about $^1/_{16}$ turn.

3.4 I/O Connector Wiring

Cables for connecting the Mini-Convectron to the vacuum system are user supplied. Power to the module is provided through the DeviceNet connector - see Figure 3-2. The DeviceNet interface requires a 121 ohm terminating resistor to be installed at each end of the trunk as specified in the DeviceNet Volume 1, Release 1.2, Section 9.3.4.

Do not connect or disconnect any electrical connectors while power is applied to the equipment (hot swapping). Doing so may cause damage to the equipment or severe electrical shock to personnel.

Connect the required wiring from the vacuum system to the Mini-Convectron Module.

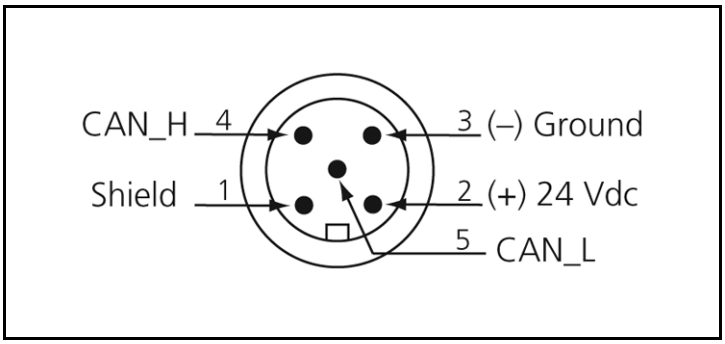

Figure 3-2 DeviceNet Micro Connector

Table 3-1 DeviceNet Micro Connector Power Requirements

Input Voltage	Surge Current	Operating Current	Pin Connection
26 Vdc	1.5 A, 8 ms	0.2 A	Pin 2 = +Vdc Pin 3 = -Vdc
11.5 Vdc	2.5 A, 8 ms	0.5 A	Pin 2 = +Vdc Pin 3 = -Vdc

3.4.1 Wiring the Process Control Connector

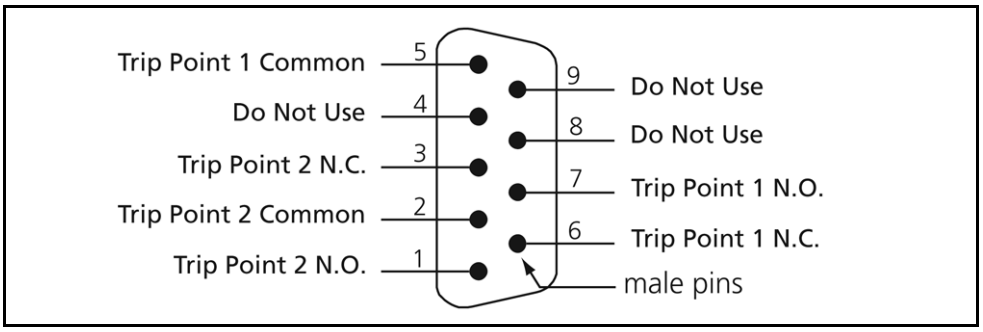

Figure 3-3 Series 275 DeviceNet Mini-Convectron Process Control Relay Connector

Table 3-2 Maximum Cable Length Relative to Baud Rate Switch Settings

Maximum Cable Length	Baud Rate Setting
500 meters	125 K
250 meters	250 K
100 meters	500 K (default)

3.4.2 Grounding

When high voltage is present, all exposed conductors of a vacuum system must be maintained at Earth ground. Improper grounding could cause product failure, property damage, or serious personal injury.

To reduce the risk of product failure, property damage, or serious personal injury, follow ground network requirements for the facility.

- Maintain all exposed conductors at earth ground.
- Ground the module housing to the vacuum chamber as instructed below.
- Make sure the vacuum port to which the module is mounted is properly grounded.

Under certain conditions, dangerously high voltage can be conducted through a gas directly to an ungrounded conductor almost as effectively as through a copper wire. The ability of an electric current to flow through a gas under certain circumstances poses a serious risk. Do not touch the exposed pins on any gauge installed on a vacuum system when high voltage is present.

If the fitting allows continuous metal-to-metal contact between the housing base and the vacuum chamber, the module is properly grounded via the fitting. If the fitting requires a rubber gasket, rubber O-ring, Teflon tape, or other material that prevents metal-to-metal contact between the housing base and the vacuum chamber, refer to Figure 3-4 and follow these instructions to ground the module to the vacuum chamber:

- Use a metal hose clamp on the gauge connected by a #12 AWG (minimum size) copper wire to the grounded vacuum chamber.

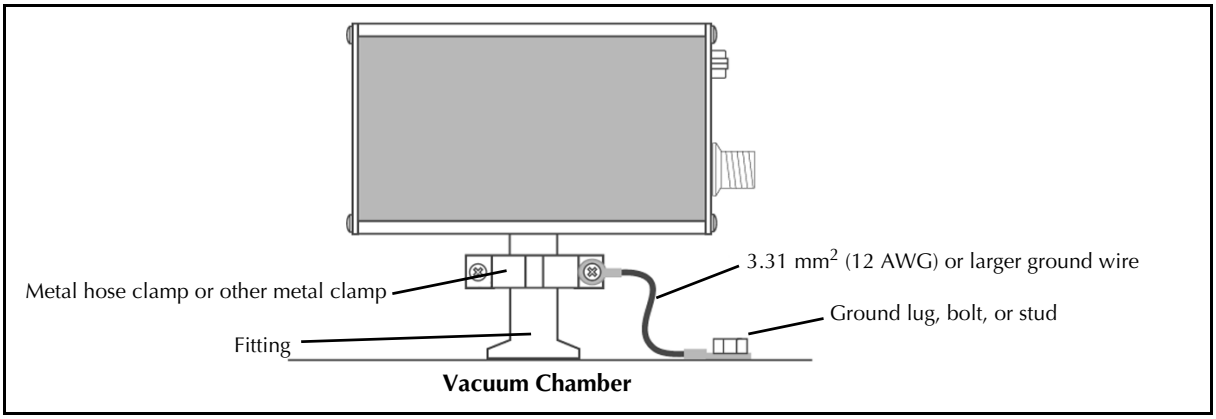

Figure 3-4 Ground Connection to the Vacuum Chamber

3.5 Configure the Setpoint Relays for the Application

To configure setpoint relays for the module, see Section 5.2, Process Control Relays in the DeviceNet Chapter.

If the module will measure the pressure of a gas other than N_2 or air, you *must* adjust relay setpoints for the process gas. The true pressure of a gas other than N_2 or air may be substantially different from the pressure that the output indicates. For example, outputs might indicate a pressure of 10 Torr (1.33 kPa, 13.3 mbar) for argon, although the true pressure of the argon is 250 Torr (33.3 kPa, 333.3 mbar). Such a substantial difference between indicated pressure and true pressure can cause over pressurization resulting in an explosion.

Failure to use accurate pressure conversion data for N_2 or air to other gases can cause an explosion due to over pressurization.
If the module will measure any gas other than N_2 or air, before connecting relays to system control devices, adjust setpoints for the process gas that will be used.

3.6 Calibration

Calibration improves the accuracy and repeatability of the Convectron gauge. To calibrate the Convectron gauge, see Section 4.8 in the Operation Chapter.

3.6.1 Atmospheric Pressure Calibration

An atmospheric calibration is performed on the Convectron gauge, using N_2, at the factory before the module is shipped. The factory calibration sets the atmospheric calibration point to 760 Torr (101.3 kPa, 1013 mbar) of N_2.

Because performance varies depending on the process gas, you may wish to reset the atmospheric calibration point if a gas other than N_2 or air is being used. Periodic resets of the atmospheric calibration point also improve the accuracy and repeatability of the Convectron gauge near atmospheric pressure, even if the process gas is N_2 or air.

3.6.2 Vacuum Chamber Pressure Calibration

Periodic resets of the vacuum pressure calibration point improve the accuracy and repeatability of the Convectron gauge.

4.1 Theory of Operation

The module measures gas pressures from 1 x 10^{-4} Torr to 1000 Torr. Vacuum chamber pressure is measured by a convection-enhanced Pirani heat-loss gauge.

The Convectron gauge operates like a standard Pirani gauge, which employs the principle of a Wheatstone bridge to convert pressure to voltage, but uses convection cooling to enable accurate pressure measurement, when properly calibrated, from 10^{-4} to 1000 Torr.

The sensing wire is an ultra-fine strand of gold-plated tungsten or solid platinum. The heated sensing wire loses more heat as the ambient gas pressure increases. The more molecules contact the sensing wire, the more power is required to keep the sensing wire at a constant temperature. As pressure increases, the voltage across the Wheatstone bridge also increases.

The Convectron gauge has a temperature compensator, which causes bridge voltage to remain unaffected by changes in ambient temperature. The sensing wire is designated R_1 in the Wheatstone bridge circuit. The temperature compensator is designated R_2. At bridge null, the following equation applies:

$$R_1 = \frac{R_2 + R_3}{R_4}$$

Bridge voltage is a non-linear function of pressure. This relationship is illustrated in Figure 4-1. If the ambient temperature does not change, R_1 remains constant.

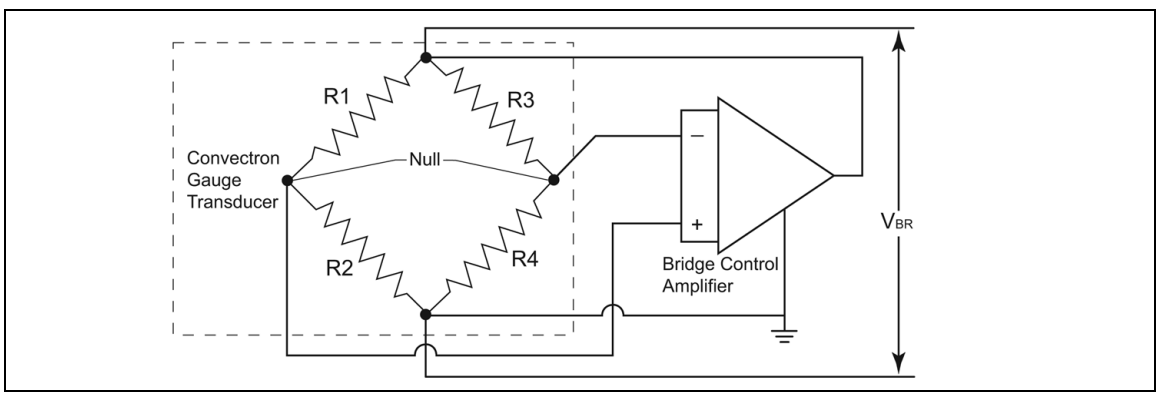

Figure 4-1 Convectron Gauge Circuit

As vacuum chamber pressure decreases, the number of molecules in the vacuum chamber and the resulting heat loss from the sensing wire also decrease. Temperature and R_1 resistance therefore increase.

The increased resistance through R_1 causes the bridge to become unbalanced and a voltage to develop across the null terminals. The bridge controller senses the null voltage and decreases the voltage across the bridge until the null voltage again equals zero. When the bridge voltage decreases, the power dissipation in the sensing wire decreases, causing R_1 resistance to decrease to its previous value.

A pressure increase causes an opposing series of occurrences, during which the bridge controller increases the bridge voltage to maintain a zero null voltage.

Using the module to measure the pressure of flammable or explosive gases can cause a fire or explosion resulting in severe property damage or personal injury.
Do not use the module to measure the pressure of flammable or explosive gases.

4.2 Panel Indicators and Adjustments

The two LEDs on the Display panel of the Mini-Convectron Module indicate whether the setpoint relays are actuated, and two LEDs indicate whether the digital pressure display is in Torr or milliTorr. See Table 4-1.

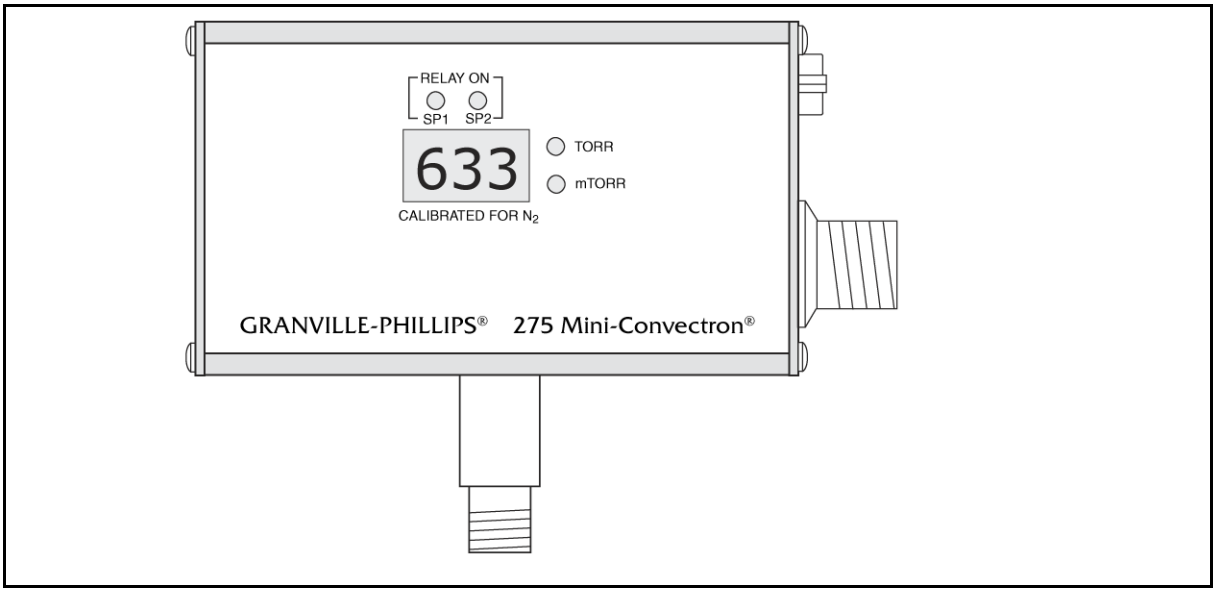

Figure 4-2 Digital Display Panel on the Mini-Convectron Module

NOTE: The Series 275538 and 275553 Mini-Convectron Modules are available to read/display Torr/mTorr, mbar/10^{-3} mbar, or KPa/Pa. See page 4 of this instruction manual.

Table 4-1 Digital Display Panel on the Mini-Convectron Module

Feature	Description
Relay ON	The LEDs illuminate green when the programmed setpoint is activated.
Pressure value display	Provides 3-digit indication of measured pressure.
Torr and mTorr LEDs *(See the NOTE, above.)*	Torr is illuminated green when the 3-digit display indicates pressure in Torr. mTorr is illuminated green when the 3-digit display indicates pressure in mTorr.

The two LEDs on the DeviceNet setup panel indicate the current status of the Mini-Convectron Module and the DeviceNet network. Three switches provide adjustments for Data Rate and Node Address settings. The two LED status indicators are explained in Section 4.2.1and Section 4.2.2; the three switches are explained in Section 4.2.3 and Section 4.2.4.

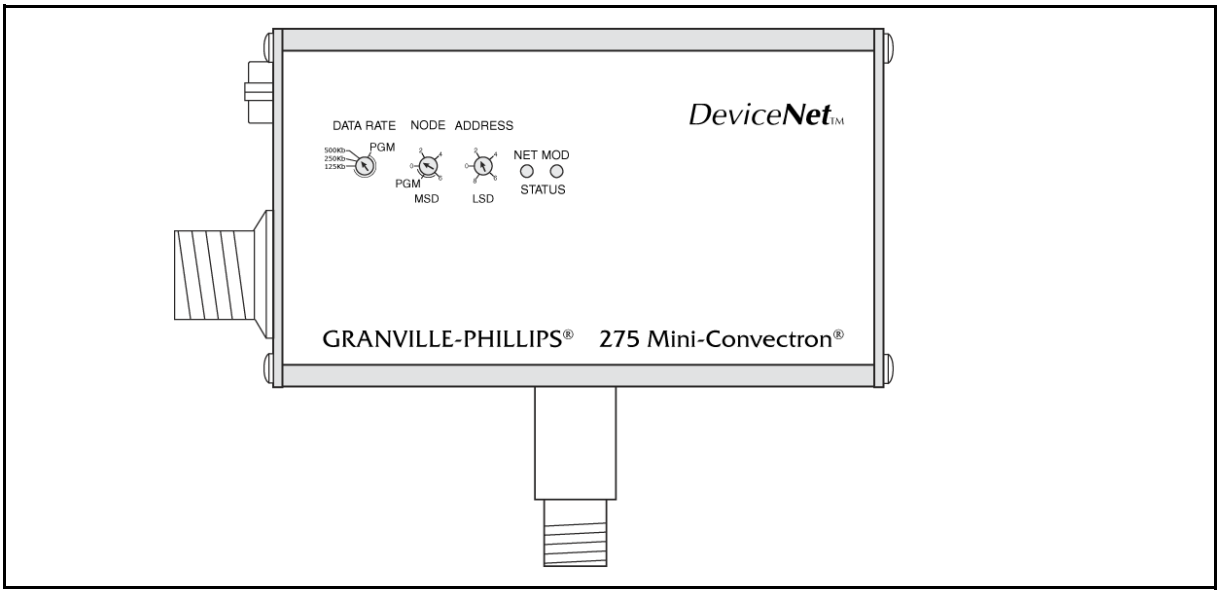

Figure 4-3 DeviceNet Setup Panel on the Mini-Convectron Module

Table 4-2 DeviceNet Setup Panel on the Mini-Convectron Module

Feature	Description
Switches	
Data Rate	See Section 4.2.3
Baud Rate (adjustable)	125Kb, 250Kb, 500Kb (default). See Table 4-5.
PGM (program)	Allows a programmed communication rate over the DeviceNet interface.
Node Address (0 - 63)	See Section 4.2.4
PGM	Allows a programmed address setting over the DeviceNet interface.
LSD	Least Significant Digit
MSD	Most Significant Digit
LEDs	
NET	Status of the DeviceNet network. See Table 4-4.
MOD	Status of the Mini-Convectron Module. See Table 4-3.

4.2.1 Module (MOD) LED Status

Table 4-3 Series 275 DeviceNet Mini-Convectron Module LED Status

LED	Status
Off	No Power to the module.
Green	Operating normally.
Orange	The module has an unrecoverable fault, and may need to be replaced.
Flashing Orange-Green	The module is in self test. Refer to the Identity Object in Volume II of the ODVA DeviceNet specification.

4.2.2 DeviceNet Network (NET) LED Status

Table 4-4 Series 275 DeviceNet Mini-Convectron DeviceNet Network Status

LED	Status
Off	The module is not online. The module has not completed the Dup_MAC_ID test yet. No power to the module.
Solid Green	The module is on-line with connections in the established state. For a Group 2 Only device, the module is allocated to a Master.
Blinking Green	The module is on-line with no connections in the established state. The module has passed the Dup_MAC_ID test, is on-line, but has not established connections to other nodes. For a Group 2 Only device, the module is not allocated to a Master.
Blinking Orange	One or more I/O connections are in the Timed-Out state.
Orange	The module has detected an error that has rendered it incapable of communicating on the network (Duplicate MAC ID or Buss-Off).

4.2.3 Data Rate (Baud Rate) Switches

Set the Baud Rate switch taking into account the limits due to the length of the cable between the DeviceNet controller and the Mini-Convectron Module. See Table 4-5.

Table 4-5 Baud Rate Switch Settings

Maximum Cable Length	Baud Rate Setting
500 meters	125 K
250 meters	250 K
100 meters	500 K (default)

4.2.4 MAC ID Address Switches

Use the address switches to set the media access control identifier (MAC ID), which the network master uses to address the module. When the device powers up or is reset by the network, the device firmware will read the address switch settings.

Specific address values range from 0 to 63.

- Set the switch labeled “MSD,” to a value of 0 to 6 for the most significant (first) digit.
- Set the switch labeled “LSD,” to a value of 0 to 9 for the least significant (second) digit.

If a valid address between 0 and 63 is set, and it differs from the current address stored in non-volatile RAM (NVRAM), the new address will be saved in memory. If the data rate switch is set to the PGM setting, the firmware will use the data rate that is stored in NVRAM.

Upon connection to the DeviceNet network, the module requests a duplicate address check.

- If another device on the network has the same address as the module, the module will not join the network.
- If the address is unique, the module will join the network and the net status indicator will blink green until a connection to the master node is established. The net status indicator will be solid green when the connection is established.

4.3 Pre-operational Requirements

Before operating the Mini-Convectron Module, the following procedures must be performed:

1. Install the module in accordance with the instructions given in Chapter 3, Installation.
2. Develop a logic diagram of the process control function.
3. Use Table 4-6 to record the proposed setpoint pressure and activation direction for each relay. See Section 5.2, Process Control Relays in the DeviceNet chapter for detailed information regarding the relay settings.

Table 4-6 Proposed Relay Settings

Relay	Activation Setpoint	Deactivation Setpoint
Relay 1		
Relay 2		

4. Draw a circuit schematic that specifies exactly how each piece of system hardware will connect to the module relays.
5. Attach a copy of the process control circuit diagram to this manual for future reference and troubleshooting.
6. If the module will measure the pressure of a gas other than N_2 or air, you *must* adjust the setpoint relays for the process gas that will be used. See Section 4.4 through Section 4.7.

If you need application assistance, contact an MKS application engineer at +1-833-986-1686.

4.4 Preparing for Pressure Measurement

The steps in this chapter assume:

- The 275 Mini-Convectron was properly set up and installed per the instructions in Chapter 3.
- The gas in your vacuum system is air or N_2. If you are using other gases you must follow the instructions in Section 4.7.
- You are reasonably familiar with the general theory of operation of thermal conductivity gauges.

It is recommended that you consult a good textbook if you are unfamiliar with vacuum technology or if you require more information on the general theory behind operating a thermal conductivity gauge. The following books are useful reference volumes.

- Dushman, S., Lafferty, J. M., *Scientific Foundations Of Vacuum Technique,* John Wiley & Sons, Inc., Second Edition, New York, 1962.
- Redhead, P. A., et al., *Ultrahigh Vacuum,* Chapman and Hall, London, 1968.
- O'Hanlon, J. F., *A User's Guide To Vacuum Technology,* John Wiley & Sons, New York, 1980.

4.5 Gas Type

The Convectron gauge in the Mini-Convectron Module is calibrated for N_2 unless otherwise labeled for custom applications.

Warning - If used improperly, Convectron Gauges can supply misleading pressure indications that can result in dangerous overpressure conditions within the system. For use with gases other than air, or N_2 consult the gas type correction charts in Section 4.7.

4.6 Preparing For Convectron Gauge Operation

Install pressure limiting devices calibrated to a level that the vacuum system can safely withstand. In addition, install pressure relief valves or rupture disks that will release pressure at a level considerably below the maximum safe pressure level of the system.

Using the N_2 calibration to pressurize a vacuum system above about 1 Torr with certain other gases can cause dangerously high pressures which may cause explosion of the system. See Section 4.7 before using with other gases.

Suppliers of pressure relief valves and pressure relief disks can be located via an internet search. Confirm that these safety devices are properly installed before operating the Series 275 Mini-Convectron Module. In addition, check that (1) the proper gas cylinders are installed, (2) gas cylinder valve positions are correct on manual systems, and (3) the automation settings are correct on automated gas delivery systems.

NOTE: Vacuum gauges with compression fittings may be forcefully ejected if the vacuum system is pressurized.

4.7 Understanding Convectron Gauge Pressure Measurement In Gases Other Than Nitrogen or Air

Convectron Gauges are Pirani type thermal conductivity gauges. These gauges measure the heat loss from a heated sensor wire maintained at constant temperature. The controller converts this measurement into gas pressure readings. For gases other than nitrogen or air the heat loss varies at any given true pressure and can result in inaccurate pressure readings.

It is important to understand that the pressure indicated by a Convectron Gauge depends on the type of gas, the orientation of the gauge axis, and on the gas density in the gauge. Convectron Gauges are normally factory calibrated for N_2 (air has approximately the same calibration). With proper precautions, the Convectron Gauge may be used for pressure measurement of certain other gases.

NOTE: The information in this section applies only when the Convectron Gauge is calibrated for N_2 and the Convectron Gauge is mounted with its axis horizontal.

At pressures below a few Torr, there is no danger in measuring pressure of gases other than N_2 and air, merely inaccurate readings. A danger arises if the N_2 calibration is used without correction to measure higher pressure levels of some other gases. For example, N_2 at 24 Torr causes the same heat loss from the Convectron sensor as argon will at atmospheric pressure. If the pressure indication of the Convectron Gauge is not properly corrected for argon, an operator attempting to fill a vacuum system with 1/2 atmosphere of argon would observe a pressure reading of only 12 Torr when the actual pressure had risen to the desired 380 Torr. Continuing to fill the system with argon to 760 Torr

would result in a 24 Torr pressure reading.

Depending on the pressure of the argon gas source, the chamber could be dangerously pressurized while the display continued to read about 30 Torr of N_2 equivalent pressure.

> *NOTE: This type of danger is not unique to the Convectron Gauge and likely exists with other thermal conductivity gauges using convection to extend the range to high pressures.*

To measure the pressure of gases other than air, or N_2 with a Convectron Gauge calibrated for N_2, you must use the conversion curves listed specifically for Convectron Gauges to translate between indicated pressure and true pressure. Do not use other data. ***Never*** use the conversion curves designed for Convectron Gauges to translate pressure readings for gauges made by other manufacturers. Their geometry is very likely different and dangerously high pressures may be produced even at relatively low pressure indications.

> *NOTE: You must ensure that the atmosphere adjustments for the Convectron Gauge are correctly set.*

Figures 4-4 through 4-6 show the true pressure vs. the indicated pressure for eleven commonly used gases. Table 4-7 will help to locate the proper graph.

Table 4-7 Pressure vs. Indicated N_2 Pressure Curve.

Fig. No.	Pressure Range and Units	Gases
4-4	10^{-4} to 10^{-1} Torr	All
4-5	10^{-1} to 1000 Torr	Ar, $C0_2$, CH_4, Freon 12, He
4-6	10^{-1} to 1000 Torr	D_2, Freon 22, Kr, Ne, 0_2
4-7	10^{-4} to 10^{-1} mbar	All
4-8	10^{-1} to 1000 mbar	Ar, $C0_2$, CH_4, Freon 12, He
4-9	10^{-1} to 1000 mbar	D_2, Freon 22, Kr, Ne, 0_2

1 mbar = 100 Pa = 1.33 Torr, so the charts can be used for pascal and mbar units.

A useful interpretation of these curves is, for example, that at a true pressure of 2×10^{-2} Torr for CH_4 the heat loss from the sensor is the same as at a true pressure of 3×10^{-2} for N_2 (see Figure 4-4). The curves at higher pressure vary widely from gas to gas because thermal losses at higher pressures are greatly different for different gases.

If you must measure the pressure of gases other than N_2 or air, use Figure 4-4 through Figure 4-9 to determine the maximum safe indicated pressure for the other gas as explained in the examples that follow.

4.7.1 Examples

Example 1 – *Maximum safe indicated pressure.*

Assume a given vacuum system will withstand an internal pressure of 2000 Torr or 38.7 psia. For safety, you wish to limit the maximum internal pressure to 760 Torr during the backfilling process. Assume you wish to measure the pressure of Freon 22. On Figure 4-6, locate 760 Torr on the left hand scale, travel to the right to the intersection with the Freon 22 curve, and then down to an indicated pressure of 11 Torr (N_2 equivalent). In this hypothetical situation, the maximum safe indicated pressure for Freon 22 is 11 Torr.

For the sake of safety, it is prudent to place a warning label on the instrument face stating “DO NOT EXCEED 11 TORR FOR FREON 22" for this example.

Example 2 – *Indicated to true pressure conversion.*

Assume you wish to determine the true pressure of helium in a system when the Convectron is indicating 10 Torr. On Figure 4-5, follow the vertical graph line up from the 10 Torr (N_2 equivalent) indicated pressure to the Helium curve and then move horizontally to the left to reveal a true pressure of 4.5 Torr. Thus 4.5 Torr Helium pressure produces an indication of 10 Torr (N_2 equivalent).

Example 3 – *True to indicated pressure conversion.*

Assume you wish to set a process control setpoint at a true pressure of 20 Torr of $C0_2$. On Figure 4-5, locate 20 Torr on the true pressure scale, travel horizontally to the right to the $C0_2$ curve and then down to an indicated pressure of 6.4 Torr (N_2 equivalent). The correct process control setting for 20 Torr of $C0_2$ is 6.4 Torr (N_2 equivalent).

Example 4 – *True to indicated pressure conversion.*

Assume you wish to obtain a helium pressure of 100 Torr in the system. On Figure 4-5, locate 100 Torr on the left hand scale, travel horizontally to the right to attempt to intersect the He curve. Because the intersection is off scale, it is apparent that this true pressure measurement requirement for helium exceeds the capability of the instrument.

> *NOTE: For gases other than those listed, the user must provide accurate conversion data for safe operation. The Convectron Gauge is not intended for use above approximately 1000 Torr true pressure.*

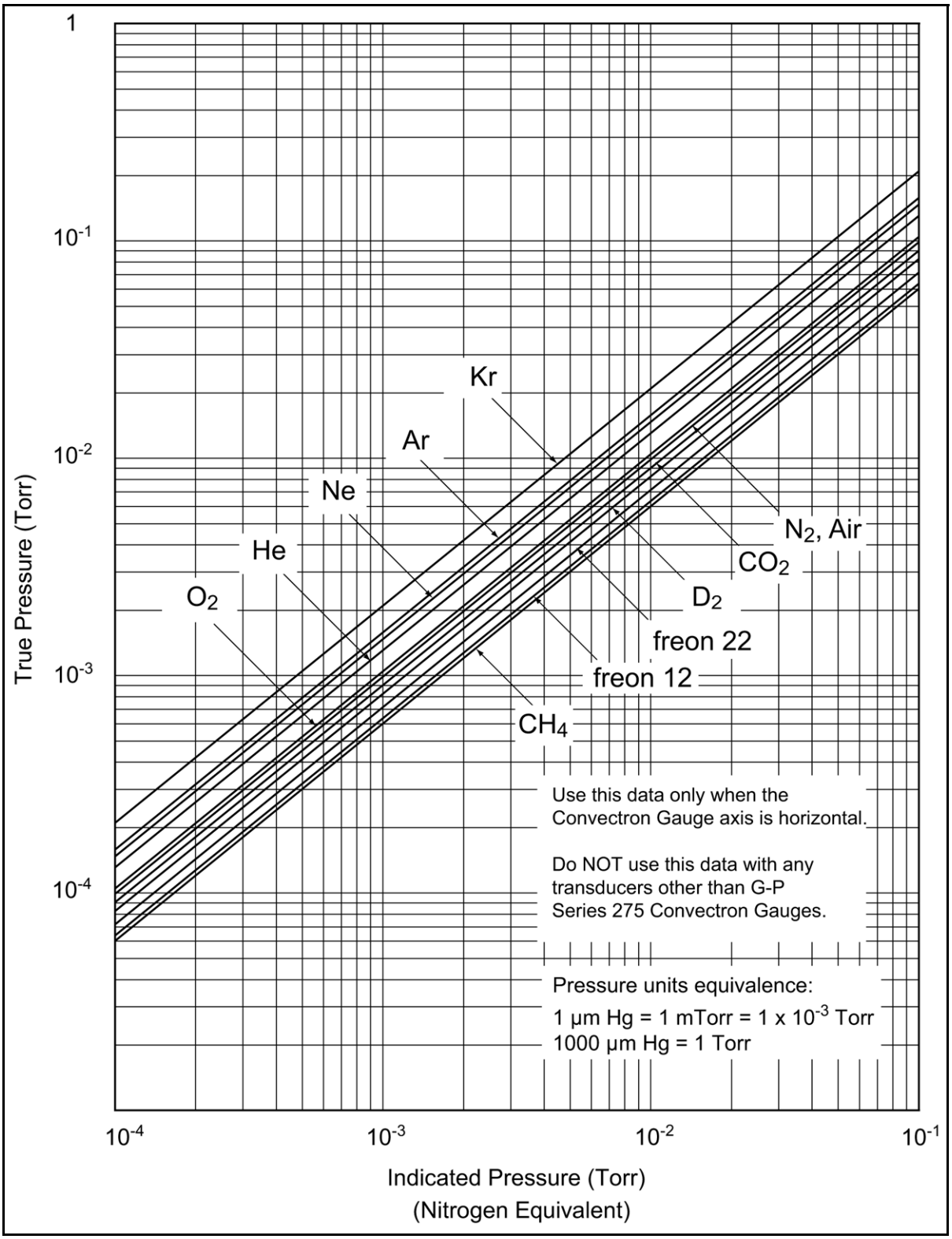

Figure 4-4 Convectron Gauge Indicated vs. True Pressure Curve; 10^{-4} to 10^{-1} Torr.

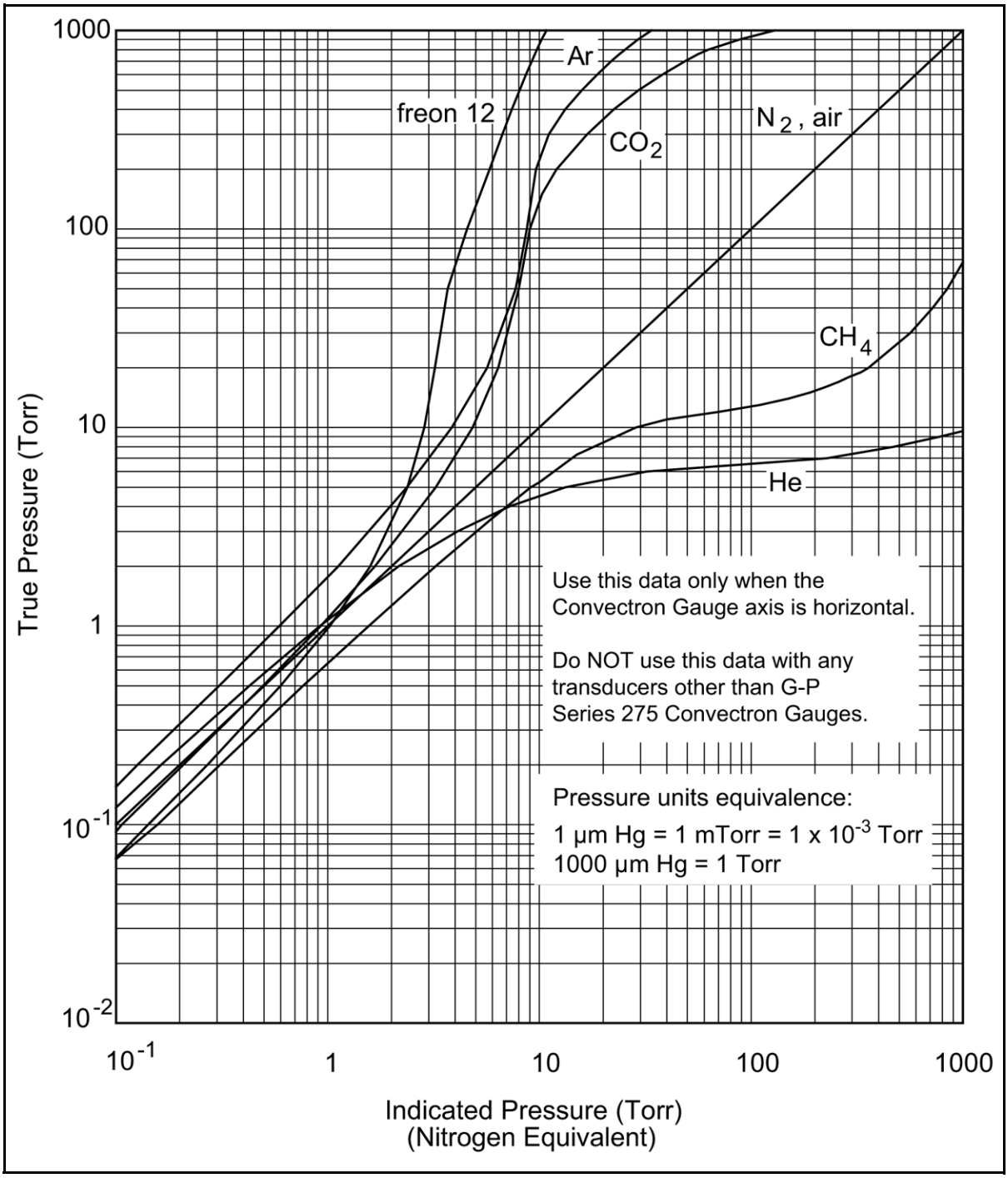

Figure 4-5 Convectron Gauge Indicated vs. True Pressure Curve; 10^{-1} to 1000 Torr.

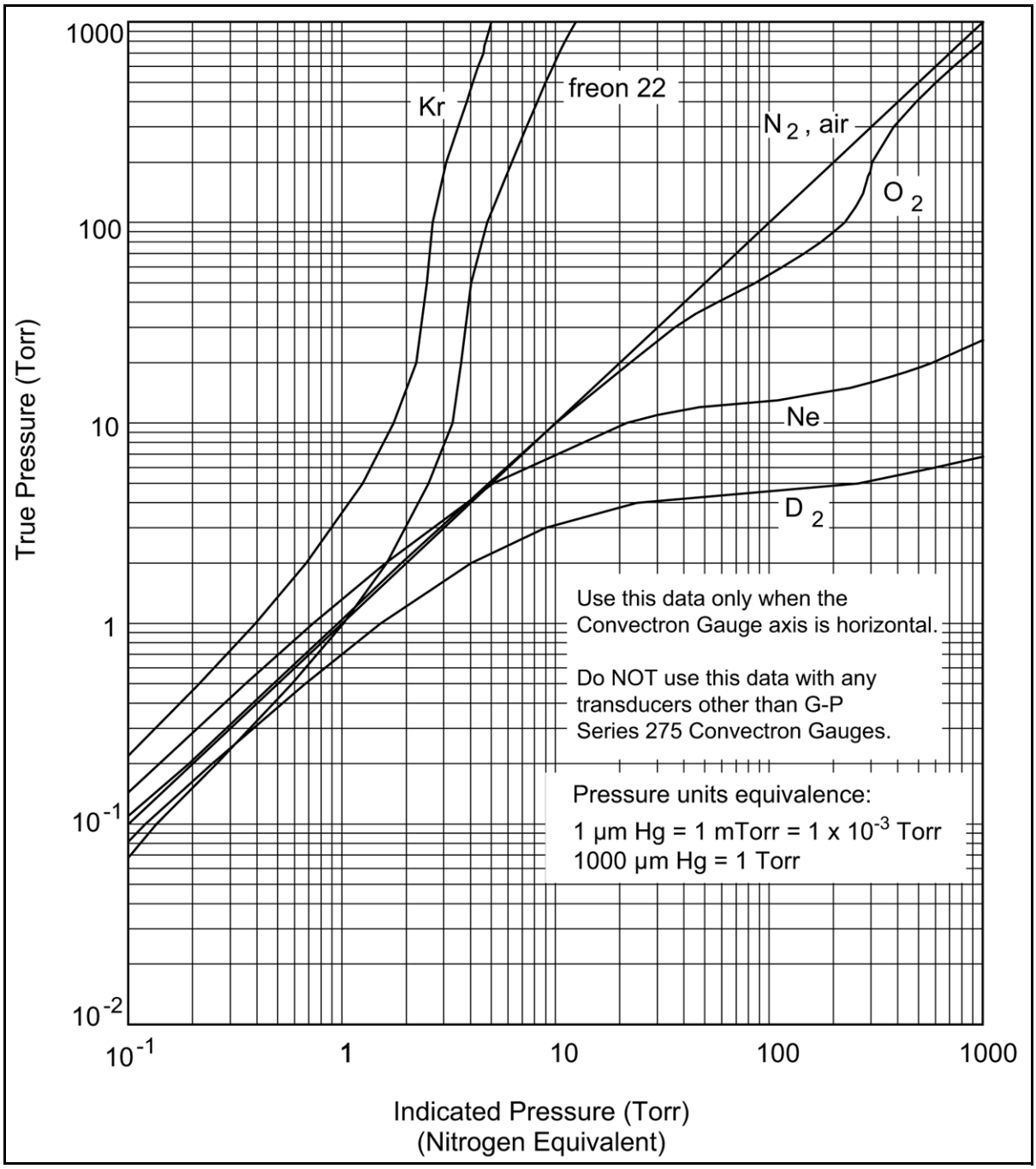

Figure 4-6 Convectron Gauge Indicated vs. True Pressure Curve; 10^{-1} to 1000 Torr.

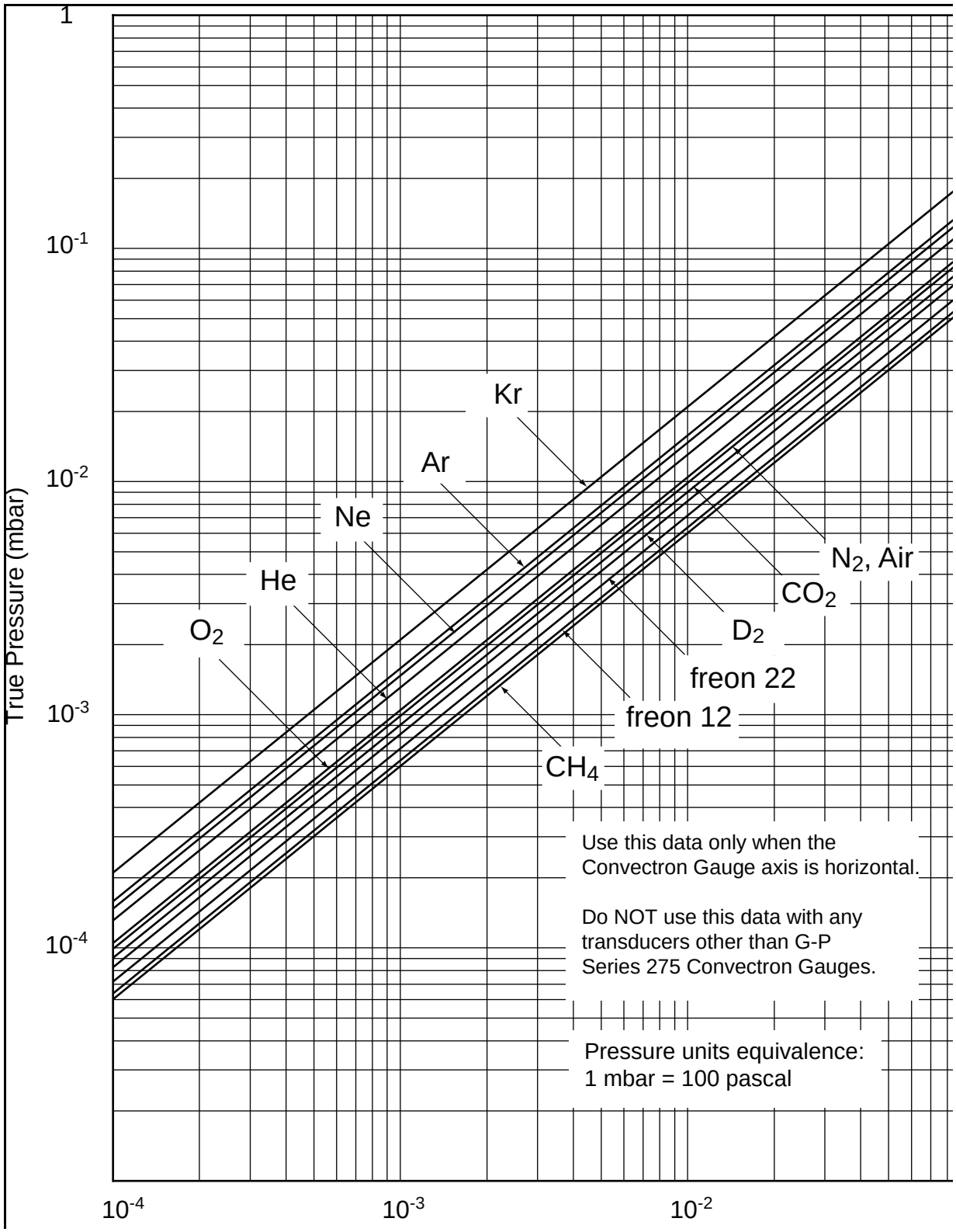

Figure 4-7 Convectron Gauge Indicated vs. True Pressure Curve; *10^{-4} to 10^{-1} mbar.*

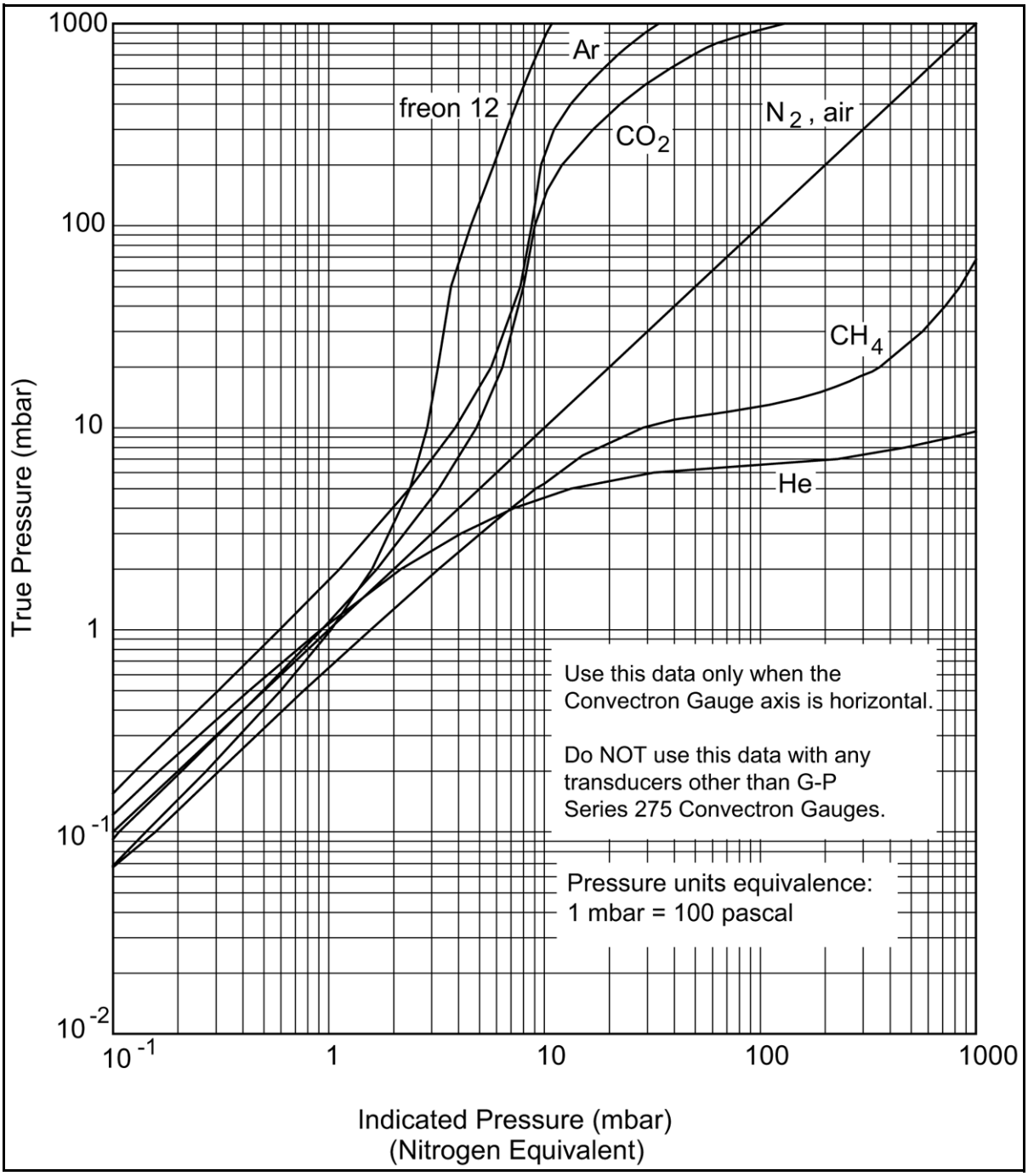

Figure 4-8 Convectron Gauge Indicated vs. True Pressure Curve; *10^{-1} to 1000 mbar.*

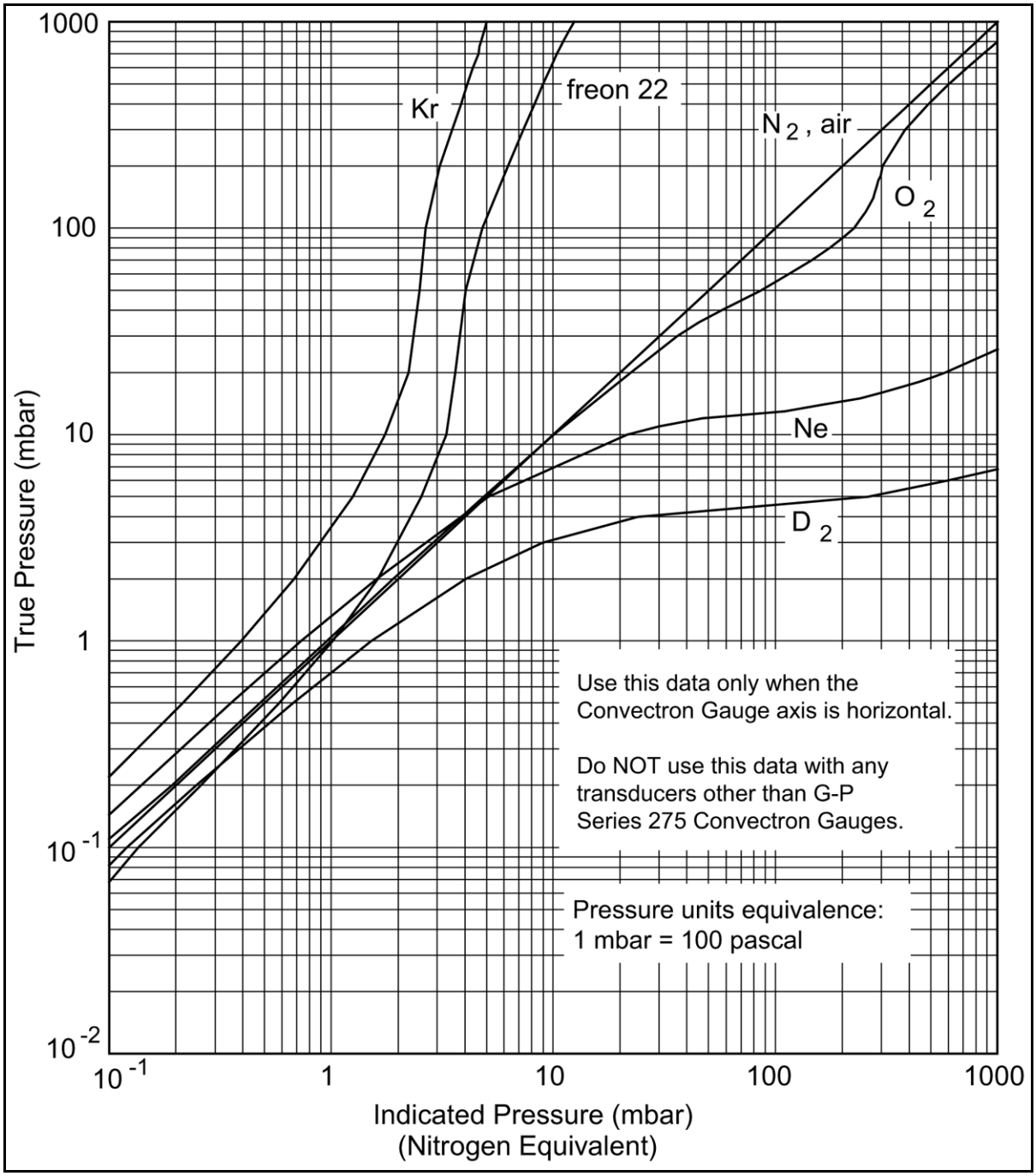

Figure 4-9 Convectron Gauge Indicated vs. True Pressure Curve; *10^{-1} to 1000 mbar.*

4.8 Adjustment of Convectron Gauge Zero and Atmospheric Pressure Indications

Using the N_2 calibration to pressurize a vacuum system above about 1 Torr with certain other gases can cause dangerously high pressures which may cause explosion of the system. See Section 4.7 before using with other gases.

Each Convectron Gauge has a stable, temperature compensated design and is individually computer calibrated for N_2. Zero adjustment of the gauge should not be necessary unless readout accuracy is required below 1×10^{-3} Torr or the gauge has been contaminated. Adjustment of the atmospheric indication should not be necessary unless compensating for variations in mounting orientation, or contamination.

For accurate readout, the adjustments must be made at vacuum, followed by adjustment at atmosphere. Atmosphere adjustment will not effect the vacuum setting, but vacuum adjustment will effect the atmosphere setting. The REAL data is an unassigned 32 bit floating point number.

4.8.1 Calibrate the Vacuum Reading

1. Evacuate the Convectron Gauge to a pressure known to be less than 1×10^{-4} Torr of N_2 for at least 15 minutes.
2. If the pressure less than 1×10^{-4} send the data listed in Table 4-8 to adjust Zero.

Table 4-8 $<1 \times 10^{-4}$ Vacuum Adjust Example

Parameter	Service	Class	Instance	REAL Data
Zero Adjust	$4B_{hex}$	31_{hex}	1	None

The example in Table 4-9 sets the pressure to a value of 1×10^{-2} Torr.

Table 4-9 1×10^{-2} Vacuum Adjust Example

Parameter	Service	Class	Instance	REAL Data
Zero Adjust	$4B_{hex}$	31_{hex}	1	0A D7 23 3C $_{hex}$

4.8.2 Calibrate the Atmosphere Reading

1. Allow the system pressure to increase to atmospheric pressure.
2. Use Table 4-10 to determine the atmospheric pressure (Torr) and data for your altitude and enter the data value for the atmospheric adjust service.

NOTE: For units of measure other than Torr, or for other atmospheric pressures, use decimal to floating point Hex conversion to find the REAL float format.

Table 4-10 Data Values for Atmosphere Calibration

Altitude in Feet	Altitude in Meters	Pressure in Torr for N_2 or Air	Pressure in mbar for N_2 or Air	Pressure in Pacal for N_2 or Air	Pressure in Inches of Mercury	* Data in REAL Float Format
10000	3048	523	695	69502	20.58	00 C0 02 44
9000	2743	543	724	72394	21.37	00 C0 07 44
8000	2438	564	752	75193	22.20	00 00 0D 44
7000	2134	586	781	78126	23.07	00 80 12 44
6000	1829	609	812	81193	23.97	00 40 18 44
5000	1524	632	842	84259	24.88	00 00 1E 44
4000	1219	656	874	87459	25.82	00 00 24 44
3000	914	681	908	90792	26.81	00 40 2A 44
2000	610	707	942	94258	27.83	00 C0 30 44
1000	305	733	977	97725	28.85	00 40 37 44
Sea Level	0	760	1013	101325	29.92	00 00 3E 44
** The numbers shown in this column (i.e. 00 C0 02 44) are shown in reverse order.*						

Table 4-11 760 Torr Example

Parameter	Service	Class	Instance	REAL Data
Gain Adjust	$4C_{hex}$	31_{hex}	1	00 00 3E 44 (760 Torr)

4.9 Special Considerations for Convectron Gauge Use Below 10^{-3} Torr

During a fast pumpdown from atmosphere, thermal effects will prevent the Convectron Gauge from tracking pressure accurately below 10^{-3} Torr. After waiting about 15 minutes, indications in the 10^{-4} range will be valid and response will be rapid. Zero adjustment at vacuum may be performed at this time (or sooner if readings in the 10^{-4} range are not needed). In the 10^{-4} Torr range, the indication is resolved to about 0.1 milliTorr provided the instrument has been carefully zeroed at vacuum. For accurate use in the 10^{-4} range, zeroing should be repeated frequently.

NOTES

5.1 DeviceNet Digital Interface Setup

Use the following procedure to configure the DeviceNet digital interface on the vacuum system and obtain a vacuum chamber pressure.

1. Turn OFF power to the Mini-Convectron Gauge Module.
2. Set the MAC ID switches on the Mini-Convectron Module to the correct address position (0 - 63) for the network on which it is installed.
3. Set the data rate switch to the appropriate baud rate setting. See Table 4-5.
4. Connect the DeviceNet network cable to the connector *275 Mini-Convectron* Vacuum Gauge Module.
5. Turn ON power to the DeviceNet connector on the Mini-Convectron Module.
6. See Table 5-1 and Table 5-2 to allocate a connection for the module to the network master. Set the bit contents to 1 for a Polled connection, and 0 to enable Explicit Messages.

   An explicit message connection must be allocated to allow a polled connection to be allocated. They may be allocated simultaneously as shown in Table 5-1 and Table 5-2.
7. Allocate a connection for the Mini-Convectron Module to the network master as listed in Table 5-2.

Table 5-1 Network Master Connection

Parameter	Service	Class	Instance	Data Type	Allocation Choice	Master ID
Connection	$4B_{hex}$	3	1	STRUCT	3*	0 to 63

*Allocation Choice: 3 allocates a polled and explicit message connection.

Table 5-2 Allocation Choice Byte Contents

7*	6*	5*	4*	3*	2*	1	0
Reserved	Acknowledge Suppression	Cyclic	Change of State	Reserved	Bit Strobed	Polled	Explicit Message

* Not Supported, Value = 0 only.

The DeviceNet protocol conveys two types of messages, as defined in Table. Once the Mini-Convectron Module is operating, use the polled I/O or explicit messages to perform the tasks listed in Table 5-3.

Table 5-3 Network Master Connection

Message Type	Message Purpose
Polled I/O messages	• Used for time-critical, control-oriented data. • Provides a dedicated, special purpose communication path between a producing application and one or more consuming applications.
Explicit messages	Provides multipurpose, point-to-point communication paths between two devices. Provides typical request/response oriented network communications used for performing node configuration and problem diagnosis.

8. Configure the expected packet rate for the explicit and polled connections, as listed in Table 5-4. The default explicit message expected packet rate is 2.5 seconds. If data is requested as a slower rate, this must change to prevent the connection from expiring. See Table 5-4 to disable the expected packet rate.

Table 5-4 Disabling the Expected Packet Rate

Parameter	Service	Class	Instance	Attribute	Data
Service	10_{hex}	5	1*	9	0
*Instance: 1 = Explicit connection, 2 = Polled Connection					

5.1.1 DeviceNet Protocol and Communication

The DeviceNet protocol used for the Mini-Convectron Module is based on the Open DeviceNet Vendors Association (ODVA) and S-Analog Sensor Object Class Subclass 01 (Instance Selector) standards. The command set includes public and vendor-specific classes, services, and attributes.

DeviceNet communication requires identifier fields for the data. The use of identifier fields provides the means for multiple priority levels, efficient transfer of I/O data, and multiple consumers. As a node in the network, the module produces data on the network with a unique address. All devices on the network that need the data listen for messages. When other devices on the network recognize the module's unique address, they use the data.

Table 5-5 Polled I/O Messaging Summary

Instance	Master data	Device data	Data type	Description	Type
1	None	00 00	UINT	UINT vacuum pressure	Open

Note: Unsigned binary is used to represent the pressure.

5.1.2 Configuring Polled I/O Data Format

The *275* Mini-Convectron Vacuum Gauge Module can input data to the network in two data types and status information can be included. The default format inputs one byte of status data and floating point pressure. See Table 5-6 and Table 5-7 for additional information for the returned pressure formats.

Table 5-6 Configuring Polled I/O Data Format

Parameter	Service	Class	Instance	Attribute	Data
2 Bytes Integer Pressure	10_{hex}	4	0	65_{hex}	1
1 Byte Status and 2 Bytes Integer Pressure	10_{hex}	4	0	65_{hex}	2
4 Bytes Floating Point Pressure	10_{hex}	4	0	65_{hex}	4
1 Byte Status and 4 Bytes Floating Point Pressure	10_{hex}	4	0	65_{hex}	5 (Default)

These parameters are non-volatile; the setting will remain after power is cycled.

5.1.3 Using Input Polled I/O

When a master polls the module for measured pressure, the format of the returned pressure value depends on the data type.

To configure the data format for input polled I/O, see Table 5-7.

Table 5-7 Input Polled I/O for Pressure Values

Instance	Typical device data	Data type	Description
1	09 79_{hex}	UINT	UINT vacuum pressure (760 Torr)
2	00 09 79_{hex}	STRUCT	BYTE exception status UINT vacuum pressure
4	00 00 3E 44_{hex}	REAL	REAL vacuum pressure
5 (default)	00 00 00 3E 44_{hex}	STRUCT	BYTE exception status REAL vacuum pressure (760 Torr)
Pressure values are transmitted in low byte to high byte order.			

5.1.4 DeviceNet Error Codes

You may use DeviceNet explicit messages or polled I/O to find out if an alarm or warning has been reported.

An alarm or warning is indicated by the status byte in the input assembly, instance 2 or instance 5. An alarm is bit weight 1, and a warning is bit weight 5.

Table 5-8 Module Alarm and Warning Status for Polled I/O

Instance	BYTE Data: One Byte Format							
2 or 5	Bit 7 0	Bit 6 0	Bit 5 Warning	Bit 4 0	Bit 3 0	Bit 2 0	Bit 1 Alarm	Bit 0 0

Use Table 5-9 to convert UINT counts to pressure. The counts are proportional to voltage and non-linear with respect to pressure.

Table 5-9 UINT Counts vs. Pressure

Pressure	UINT Count	Pressure	UINT Count
0.0001	453	6.5	5490
0.001	464	10	5986
0.01	566	15	6246
0.015	613	20	6523
0.02	660	30	6736
0.05	885	50	6912
0.075	1031	65	6995
0.1	1157	100	7060
0.2	1558	150	7118
0.35	1935	200	7172
0.5	2306	300	7311
0.65	2573	400	7473
0.85	2888	500	7622
1	3086	600	7747
2	4007	700	7851
3	4552	760	7909
5	5204	900	8019
		1000	8086

5.1.5 Check Module Status

Check the status if the Mini-Convectron Module will not read pressure due to a fault (alarm).

Table 5-10 Checking the Mini-Convectron Module Status

Parameter	Service	Class	Instance	Attribute	Data
Check Status	$0E_{hex}$	31_{hex}	1	07_{hex}	Unassigned integer, 1 byte

5.2 Process Control Relays

The module has two single-pole double-throw (normally open/normally closed) relays. Each relay has a programmable activation direction and trip point. The trip point is a value representing pressure at which the relay activates.

- When the module is shipped from the factory, relay trip points are out of range, disabled, and will not operate.
- You must configure relays to make them operable.

  In default mode, trip point relays activate with decreasing pressure and deactivate at a higher pressure than the activation pressure, as illustrated in Figure 5-2.

  You can reverse the relay polarity, so trip point relays activate with increasing pressure and deactivate at a lower pressure than the activation pressure, as illustrated in Figure 5-3.
- You may change the deactivation pressure by entering REAL data that represents hysteresis as a percentage of the activation pressure.
- Valid hysteresis values are any activation pressure percentage, from 5% to 100%, that is divisible by 5.

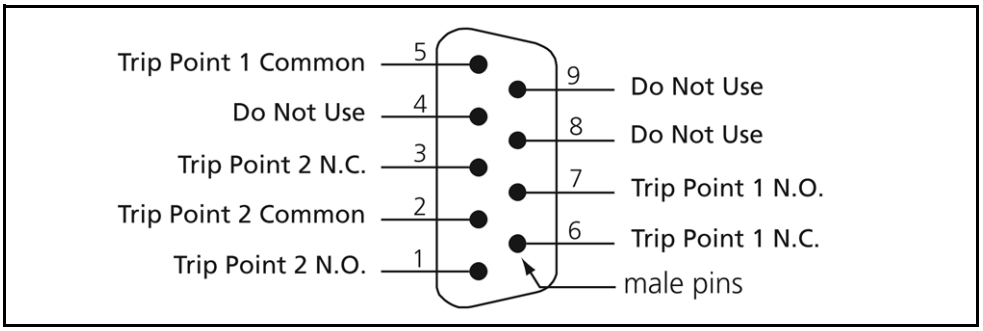

Figure 5-1 Series 275 DeviceNet Mini-Convectron Process Control Relay Connector

See Figure 5-2, Figure 5-3, and Table 5-11 to configure the trip point relays.

You may use explicit messages to perform the following tasks:

- Setting or getting relay trip points
- Setting or getting relay activation direction (polarity)
- Setting or getting relay hysteresis
- Setting or getting disabled/enabled state of relays

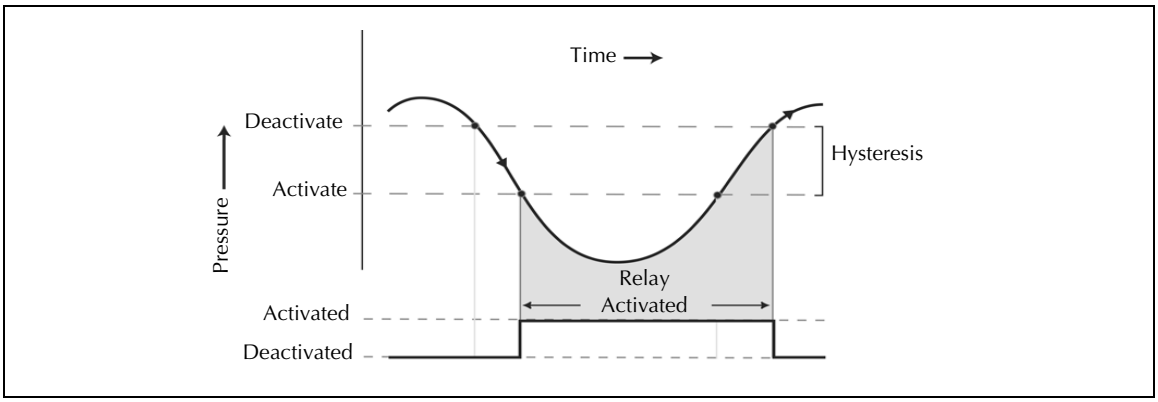

Figure 5-2 Default Behavior of Relays Activating with Decreasing Pressure

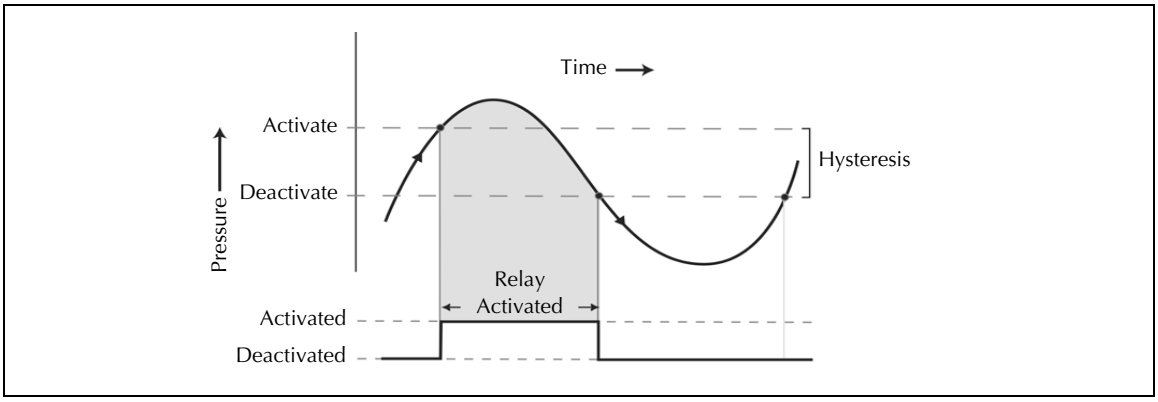

Figure 5-3 Default Behavior of Relays Activating with Increasing Pressure

Table 5-11 Configuring Trip Point Relays

Parameter	Service	Class	Instance	Attribute	Data
Disable Trip Point Relay 1	10_{hex}	$C7_{hex}$	01_{hex}	06_{hex}	0 (default)
Enable Trip Point Relay 1	10_{hex}	$C7_{hex}$	01_{hex}	06_{hex}	1
Normal Polarity Trip Point 1	10_{hex}	$C7_{hex}$	01_{hex}	08_{hex}	0 (default)
Reversed Polarity Trip Point 1	10_{hex}	$C7_{hex}$	01_{hex}	08_{hex}	1
Trip Point Pressure Trip Point 1 350 Torr	10_{hex}	$C7_{hex}$	01_{hex}	05_{hex}	00 00 AF 43 $_{hex}$ (350 Torr)
Set Trip Point 1 Hysteresis	10_{hex}	$C7_{hex}$	01_{hex}	$0A_{hex}$	00 00 A0 41_{hex} (default = 20%)
Disable Trip Point Relay 2	10_{hex}	$C7_{hex}$	02_{hex}	06_{hex}	0 (default)
Enable Trip Point Relay 2	10_{hex}	$C7_{hex}$	02_{hex}	06_{hex}	1
Normal Polarity Trip Point 2	10_{hex}	$C7_{hex}$	02_{hex}	08_{hex}	0 (default)
Reversed Polarity Trip Point 2	10_{hex}	$C7_{hex}$	02_{hex}	08_{hex}	1
Trip Point Pressure Trip Point 2 1.00 e-2 Torr	10_{hex}	$C7_{hex}$	02_{hex}	05_{hex}	0A D7 23 3C $_{hex}$ (1 x 10^{-2} Torr)
Set Trip Point 2 Hysteresis	10_{hex}	$C7_{hex}$	02_{hex}	$0A_{hex}$	00 00 A0 41 $_{hex}$ (default = 20%)
These parameters are non-volatile, the setting will remain after power is cycled.					

5.2.1 Get Relay Trip Points

Use the explicit messages listed in Table 5-14 to get the pressure value at which a relay activates.

Table 5-12 Get Relay Trip Points

Service	Class	Instance	Attribute	Typical Device Data	Data Type	Description
$0E_{hex}$	$C7_{hex}$	1	5	00 00 AF 43_{hex} (350 Torr)	REAL	Get pressure at which relay 1 activates
$0E_{hex}$	$C7_{hex}$	2	5	0A D7 23 $3C_{hex}$ (1×10^{-2} Torr)	REAL	Get pressure at which relay 2 activates

5.2.2 Get Enable or Disable Status of Relays

Use the explicit messages listed in Table 5-13 to get the enabled or disabled status of a relay.

After relays have been made operable, you may use explicit messages to disable any specified relay. If you disable a relay, you must re-enable it to make it operable.

Table 5-13 Relay Enabled/Disabled Status

Service	Class	Instance	Attribute	Typical Device Data	Data Type	Description
$0E_{hex}$	$C7_{hex}$	1	6	00_{hex}	BOOL	0 = Relay 1 is disabled 1 = Relay 1 is enabled
$0E_{hex}$	$C7_{hex}$	2	6	00_{hex}	BOOL	0 = Relay 2 is disabled 1 = Relay 2 is enabled

5.2.3 Get Activation or Deactivation Status of Relays

Use the explicit messages listed in Table 5-14 to get the activation or deactivation state of a relay.

Table 5-14 Relay Activation/Deactivation Status

Service	Class	Instance	Attribute	Typical Device Data	Data Type	Description
$0E_{hex}$	$C7_{hex}$	1	7	00_{hex}	BOOL	0 = Relay 1 is deactivated 1 = Relay 1 is activated
$0E_{hex}$	$C7_{hex}$	2	7	00_{hex}	BOOL	0 = Relay 2 is deactivated 1 = Relay 2 is activated

5.2.4 Get Relay Hysteresis

Use the explicit messages listed in Table 5-15 to get the hysteresis for a relay.

- The returned value is a percentage of activation pressure.

Table 5-15 Relay Hysteresis

Service	Class	Instance	Attribute	Typical Device Data	Data Type	Description
$0E_{hex}$	$C7_{hex}$	1	$0A_{hex}$	00 00 70 41_{hex} (15%)	REAL	Percentage of activation pressure of relay 1
$0E_{hex}$	$C7_{hex}$	2	$0A_{hex}$	00 00 70 41_{hex} (15%)	REAL	Percentage of activation pressure of relay 2

5.3 DeviceNet Protocol for the Mini-Convectron Module

5.3.1 Standard Objects

There is a single instance of the Identity Object for the Mini-Convectron Module. No class attributes are supported. All of the instance attributes are contained in ROM or EEPROM.

5.3.2 Identity Object

Table 5-16 Explicit Message Summary - Identity Object

Service	Class	Instance	Attribute	Master data	Device data	Data type	Description	Type
$0E_{hex}$	1	1	1	None	00 $5C_{hex}$	UINT	Vendor identification	Open
$0E_{hex}$	1	1	2	None	00 51_{hex}	UINT	Product type	Open
$0E_{hex}$	1	1	3	None	00 02	UINT	275 product ID	Open
$0E_{hex}$	1	1	4	None	01 01	STRUCT	Firmware revision	Open
$0E_{hex}$	1	1	5	None	00 00	WORD	Status and fault information	Open
$0E_{hex}$	1	1	6	None	00 00 00 00	UDINT	Serial number	Open
$0E_{hex}$	1	1	7	None	“GP275”	S_STRING	Identification	Open
05_{hex}	1	1	None	None	None		Reset module to power-up state	Open

5.3.3 DeviceNet Object

There is a single instance of the DeviceNet Object for the Mini-Convectron Module. No class attributes are supported.

Table 5-17 Explicit Message Summary - DeviceNet Object

Service	Class	Instance	Attribute	Master data	Device data	Data type	Description	Type
$0E_{hex}$	3	1	1	None	3F	USINT	Get node address, range 0–63	Open
$0E_{hex}$	3	1	2	None	02	USINT	Get baud rate, range 0–2	Open
$0E_{hex}$	3	1	3	None	01	BOOL	Get bus-off interrupt, range 0–1	Open
$0E_{hex}$	3	1	4	None	00	USINT	Get bus-off counter, range 0–255	Open
10_{hex}	3	1	4	0	Success		Set bus-off counter	Open
$0E_{hex}$	3	1	5	None	00 01	STRUCT	Get allocation choice, range 0–3	Open
$4B_{hex}$	3	1	None	0B 02	Success	STRUCT	Set allocation choice, range 0–3	Open
$4C_{hex}$	3	1	None	03	Success	BYTE	Release allocation, range 0–3	Open

5.3.4 Connection Object

There are two instances of the Connection Object in the Mini-Convectron Module. Instance #1 is assigned to the Explicit Message Connection. Instance #2 is assigned to the Polled I/O Connection. Table 5-18 and Table 5-19 show the attributes and the predefined values of each.

Table 5-18 Connection Object - Explicit Message Connection

Service	Class	Instance	Attribute	Master data	Device data	Data type	Description	Type
$0E_{hex}$	5	1	1	None	03	USINT	Get state of the object, range 0–5	Open
$0E_{hex}$	5	1	2	None	00	USINT	Get instance type, explicit	Open
$0E_{hex}$	5	1	3	None	83_{hex}	BYTE	Get transport class trigger	Open
$0E_{hex}$	5	1	4	None	FB 05	UINT	Get produced connection ID	Open
$0E_{hex}$	5	1	5	None	FC 05	UINT	Get consumed connection ID	Open
$0E_{hex}$	5	1	6	None	21_{hex}	BYTE	Get initial communication characteristics	Open
$0E_{hex}$	5	1	7	None	16 00	UINT	Get produced connection size	Open
$0E_{hex}$	5	1	8	None	16 00	UINT	Get consumed connection size	Open
0Ehex	5	1	9	None	$C4_{hex}$ 09	UINT	Get expected packet rate, range 0–65535	Open
10_{hex}	5	1	9	00 00	Success	UINT	Set expected packet rate	Open
$0E_{hex}$	5	1	$0C_{hex}$	None	01	USINT	Get watchdog timeout action, 1 or 3	Open
$0E_{hex}$	5	1	$0D_{hex}$	None	00 00	UINT	Get produced connection path length	Open
$0E_{hex}$	5	1	$0E_{hex}$	None	00	EPATH	Get produced connection path	Open
$0E_{hex}$	5	1	$0F_{hex}$	None	00 00	UINT	Get consumed connection path length	Open
$0E_{hex}$	5	1	10_{hex}	None	04	EPATH	Get consumed connection path	Open

Table 5-19 Connection Object - Polled I/O Connection

Service	Class	Instance	Attribute	Master data	Device data	Data type	Description	Type
$0E_{hex}$	5	2	1	None	3	USINT	Get state of the object, range 0–5	Open
$0E_{hex}$	5	2	2	None	1	USINT	Get instance type, I/O	Open
$0E_{hex}$	5	2	3	None	82_{hex}	BYTE	Get transport class trigger	Open
$0E_{hex}$	5	2	4	None	FF 03	UINT	Get produced connection ID	Open
$0E_{hex}$	5	2	5	None	FD 05	UINT	Get consumed connection ID	Open
$0E_{hex}$	5	2	6	None	01_{hex}	BYTE	Get initial communication characteristics	Open
$0E_{hex}$	5	2	7	None	05	UINT	Get produced connection size	Open
$0E_{hex}$	5	2	8	None	00	UINT	Get consumed connection size	Open
$0E_{hex}$	5	2	9	None	D0 07	UINT	Get expected packet rate, range 0–65535	Open
10_{hex}	5	2	9	01 02	Success	UINT	Set expected packet rate	Open
$0E_{hex}$	5	2	$0C_{hex}$	None	00	USINT	Get watchdog timeout action	Open
$0E_{hex}$	5	2	$0D_{hex}$	None	06	UINT	Get produced connection path length	Open
$0E_{hex}$	5	2	$0E_{hex}$	None	20 04 24 05 30 03	EPATH	Get produced connection path	Open
$0E_{hex}$	5	2	$0F_{hex}$	None	00	UINT	Get consumed connection path length	Open
$0E_{hex}$	5	2	10_{hex}	None	00	EPATH	Get consumed connection path	Open

5.3.5 Analog Sensor Object

Table 5-20 Analog Sensor Object

Service	Class	Instance	Attribute	Master Data	Device Data	Description
$0E_{hex}$	31	1	3	None	CA	Get Data Type
$0E_{hex}$	31	1	6	None	5D FE CE 3D	Get pressure reading
$0E_{hex}$	31	1	7	None	0	Get status, alarm, or warning

5.3.6 Resets

Table 5-21 Resets

Service	Class	Instance	Attribute	Master Data	Description
43_{hex}	C4	1	None	None	Reset factory defaults
32_{hex}	31	1	None	None	Reset factory calibration

5.4 DeviceNet Troubleshooting Procedures

Table 5-22 DeviceNet Interface Troubleshooting

Symptom	Possible Causes	Solutions
The readout cannot be calibrated to the specified value using Zero_Adjust or Gain_Adjust service.	1. The gauge is incorrectly calibrated out of operating range. 2. The gauge tube contaminated with material from vacuum system. 3. The gold plating on sensor has been attacked by a gas such as flourine or mercury vapor.	1. Use restore factory calibration command (Service 32_{hex}, Class 31_{hex}, Instance 01_{hex}) to restore factory calibration. User calibration values can re-calibrated if desired. 2. Refer to Section 6.4.5 and clean gauge tube. If not effective, replace gauge tube. 3. Refer to Section 6.4.6 and replace gauge tube. Cleaning will not solve this problem.
The readout indicating a pressure in the system that is very different than being observed by supporting gauges.	1. The gas composition in the system is not what the user believes it to be. This can be caused by selective gas pumping, process in use, outgassing of product, etc. 2. Gauge calibration incorrect.	1. Determine gas composition and refer to Section 4.8 to calibrate the Mini-Convectron Gauge Module accordingly. 2. Use restore factory calibration command (Service 32_{hex}, Class 31_{hex}, Instance 01_{hex}) to restore calibration. User calibration values can be re-calibrated if desired.

Table 5-23 Analog Sensor Status, Class 31_{hex} Instance 1, Attribute 7

Bit	Definition
0	High alarm - none
1	Low alarm - bridge volts <200 mV, sensor failure
2	High warning - none
3	Low warning - bridge volts <300 mV, calibration required

Table 5-24 Analog Sensor Reading Valid, Class 31_{hex} Attribute 5

Bit	Definition
0	Reading valid - indicate valid reading

Table 5-25 Identity Object Status, Class 1, Instance 1, Attribute 5

Bit	Definition
0	An object is allocated - unrelated to error condtion
2	Configured - unrelated to error condtion
8	Minor recoverable fault, same as bit 3, analog sensor status
11	Minor unrecoverable fault, same as bit 1, analog sensor status

Table 5-26 I/O Status Byte and Device Supervisor Exception Status, Class 30_{hex} Instance 1, Attribute $0C_{hex}$

Bit	Definition
1	Alarm - same as bit 1, analog sensor status
5	Warning - same as bit 3, analog sensor status

5.5 DeviceNet Error Codes

You may use DeviceNet explicit messages or polled I/O to find out if an alarm or warning has been reported.

An alarm or warning is indicated by the status byte in the input assembly, instance 2 or instance 5. An alarm is bit weight 1, and a warning is bit weight 5.

Table 5-27 Module Alarm and Warning Status for Polled I/O

Instance	BYTE Data: One Byte Format							
2 or 5	Bit 7 0	Bit 6 0	Bit 5 Warning	Bit 4 0	Bit 3 0	Bit 2 0	Bit 1 Alarm	Bit 0 0

NOTES

Chapter 6

Service and Maintenance

6.1 Service Guidelines

Some minor problems are readily corrected on site. If the product requires service, contact the MKS Technical Support Department at +1-833-986-1686. If the product must be returned to the factory for service, request a Return Material Authorization (RMA) from MKS. Do not return products without first obtaining an RMA. In some cases a hazardous materials disclosure form may be required. The MKS Customer Service Representative will advise you if the hazardous materials document is required.

When returning products to MKS, be sure to package the products to prevent shipping damage. Shipping damage on returned products as a result of inadequate packaging is the Buyer's responsibility.

For Customer Service / Technical Support:

MKS Global Headquarters
2 Tech Drive, Suite 201
Andover MA, 01810 USA
Phone: +1-833-986-1686
Email: insidesales@mksinst.com
Visit our website at www.mksinst.com

6.2 Grounding Guidelines

Because the 275 Mini-Convectron Module contains static-sensitive electronic parts, the following precautions must be followed when troubleshooting:

- Use a grounded, conductive work surface. Wear a high impedance ground strap for personal protection.
- Use conductive or static dissipative envelopes to store or ship static sensitive devices or printed circuit boards.
- Do not operate the product with static sensitive devices or other components removed from the product.
- Do not handle static sensitive devices more than absolutely necessary, and only when wearing a ground strap.
- Do not use an ohmmeter for troubleshooting MOS circuits. Rely on voltage measurements.
- Use a grounded, electrostatic discharge safe soldering iron.

6.3 Damage Requiring Service

Disconnect this product from the power source and refer servicing to Qualified Service Personnel if any the following conditions exist:

- The gauge cable, power-supply cord, or plug is damaged.
- Liquid has been spilled onto, or objects have fallen into, the product.
- The product does not operate normally even if you have followed the Operation Instructions. Adjust only those controls that are covered in the instruction manual.
- The product has been dropped or the enclosure has been damaged.

Replacement Parts - When replacement parts are required, be certain to use the replacement parts that are specified by MKS, or that have the same characteristics as the original parts. Do not substitute parts or modify the product. Unauthorized substitutions may result in fire, electric shock or other hazards.

Safety Check - Upon completion of any service or repairs to this product, ask the Qualified Service Person to perform safety checks to determine that the product is in safe operating order.

The service and repair information in this manual is for the use of Qualified Service Personnel. To avoid shock, do not perform any procedures in this manual or perform any servicing on this product unless you are qualified to do so.

6.4 Troubleshooting and Repair

6.4.1 Symptoms and Possible Causes

Table 6-1 General Symptoms/Possible Causes.

Symptom	Possible Causes
The Mini-Convectron Module will not power-up.	Check for +11 Vdc to +24 Vdc power across pins 2 and 3 of the DeviceNet connector. See Section 3.4 in the Installation chapter.
The Bridge analog output voltage reads less than +0.22 Vdc or greater than +10 Vdc.	Gauge tube failure. See Section 6.4.2 through Section 6.4.5 to check the gauge tube. Bridge amplifier failure. Replace the Module.
The Module does not respond to DeviceNet communication from a Master but the MOD Indicator is illuminated solid green.	Address rotary switches set to incorrect address positions. Set the address rotary switches to the correct address positions. Incorrect baud rate. Set the baud rate switch in the correct position.
The MOD indicator does not illuminate.	The DeviceNet power supply is disconnected, off, or inadequate for the load. A switching supply may shut down from the current surge upon power up. If a switching power supply is used, size the current limit to two times working load.
The Module always reads 9.99e+09 via DeviceNet or the MOD light turns red.	Fault condition indicated by reading response to status attribute. See Section 5.1.5 for the DeviceNet command to check the status of the Module, and to Section 5.4 for status bit definitions.
Pressure readout cannot be calibrated using the specified calibration commands.	The Convectron gauge tube is contaminated with material from the vacuum chamber. Clean the gauge tube (see Section 6.4.5) or replace the gauge tube. If the gold plating on the sensor wire has been attacked by a gas such as fluorine or mercury vapor, which has changed the emissivity or resistance, cleaning the gauge tube will not solve the problem - the gauge tube must be replaced.
The pressure readout from the Mini-Convectron is vastly different from that which is observed by supporting gauges on the vacuum system.	The gas composition in the vacuum chamber may not be what the user believes it to be. Determine the actual type of gas in the chamber, and calibrate the Mini-Convectron Module accordingly. See Section 3.6 in the Operation chapter. Unexpected gas sources can also be caused by the process within the chamber or outgassing of the product in the process chamber.
Pressure reading grossly in error.	The Module out of calibration. Unknown gas type. Section 4.7. The Module (gauge) is not mounted horizontally. See Section 3.3. The Sensor is damaged (e.g., by reactive gas) or dirty. See Section 6.4.4 and Section 6.4.5. Extremes of temperature or mechanical vibration.

6.4.2 Removing a Convectron Gauge from the Module

The Convectron Gauge can be removed from the module for testing, cleaning, or replacement. The following sections provide the information required to perform those functions.

Removing or replacing the Convectron gauge in a high–voltage environment can cause an electrical discharge through a gas or plasma, resulting in serious property damage or personal injury due to electrical shock.

1. Turn OFF power to the Mini-Convectron Module and vent the vacuum chamber to atmospheric pressure.
2. Use the fitting to detach the module from the vacuum chamber.

6.4.3 Open the Mini-Convectron Module for Repair

Note: To avoid contaminating the Convectron gauge, wear sterile gloves during the removal and replacement procedure.

1. Use a 3/16-inch nut driver or socket to remove the two hex head screws that connect the 9-pin connector to the connector plate. See Figure 6-1.
2. Use a #1 Phillips screwdriver to remove the four Phillips-head screws from the connector end plate. See Figure 6-1.

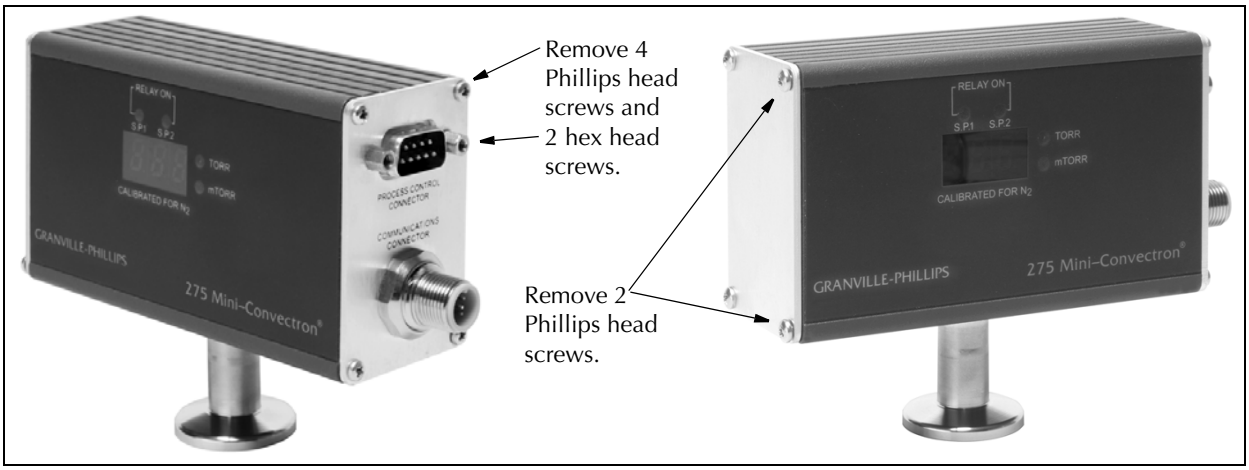

Figure 6-1 Remove Screws to Open the Mini-Convectron Module

3. Use a #1 Phillips screwdriver to remove only two of the four Phillips-head screws from the end plate without connectors. See Figure 6-1.
4. Remove the blue faceplate of the module.
5. Carefully pull the connector plate away from the module, being careful not to damage the wires that connect to the DeviceNet connector. See Figure 6-2.

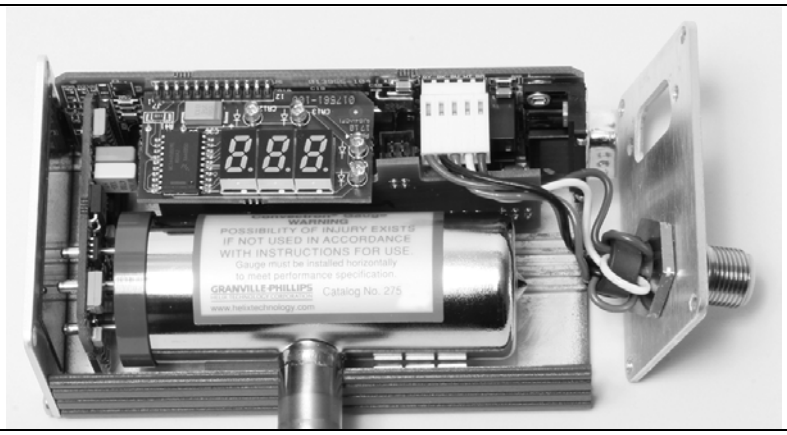

Figure 6-2 Mini-Convectron Module with Face Plate Removed

6. Carefully unplug the Convectron gauge from the spring-loaded sockets in the printed circuit board.

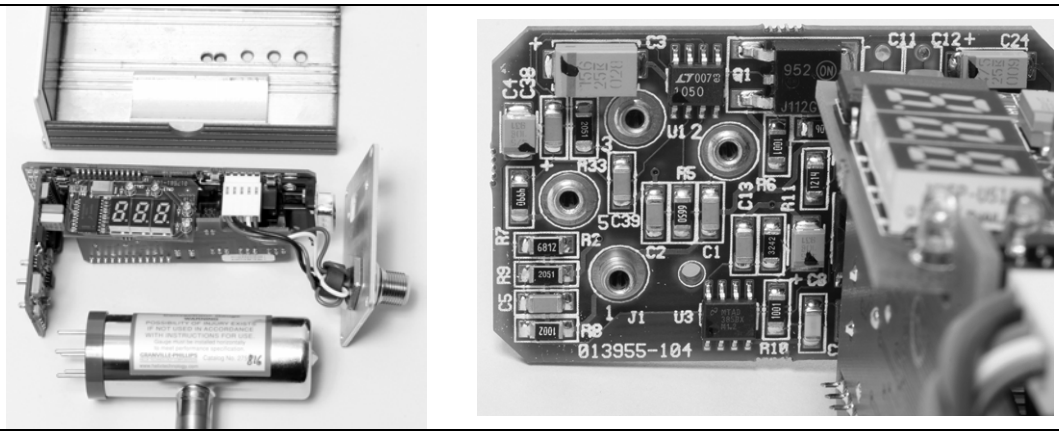

Figure 6-3 Convectron Gauge and PC Board Assembly

6.4.4 Convectron Gauge Test Procedure

The small diameter sensor wire inside the gauge tube can be damaged by even small voltages. Do not perform electrical continuity tests with instruments applying in excess of 0.1 volt when the gauge is at vacuum, or 2 volts when at atmospheric pressure.

1. Remove the Convectron gauge tube as instructed above.

2. Use a *low-voltage (maximum 0.1 V) ohmmeter* to check resistance values across the pins on the base of the gauge. Pin numbers are embossed on the base. Figure 6-4 illustrates the base of the gauge.

The Convectron Gauge should show the resistances listed in Figure 6-4. Pin numbers are embossed on the blue plastic pin feed-through of the gauge. Measure the resistance across the pins with the gauge at atmospheric pressure, using an ohmmeter that will not apply more than 10 mA.

3. Replace the gauge tube if required. Install the gauge tube and reassemble the module.

4. Install the module onto the vacuum chamber and check it for proper operation.

- Pins 1 to 2: 19 to 22 ohms
- Pins 2 to 3: 50 to 60 ohms
- Pins 1 to 5: 180 to 185 ohms

If the resistance from pins 1 to 2 reads about 800 ohms, the sensor wire in the gauge is broken. Replace the gauge tube.

If the resistance values shown here are correct, but you still think the gauge is not reading correctly, the gold plating on the sensor wire may be eroded and the gauge will have to be replaced.

Figure 6-4 Convectron Gauge Connector and Resistance in Ohms

6.4.5 Cleaning a Contaminated Convectron Gauge

The fumes from solvents such as trichloroethylene, perchloroethylene, toluene, and acetone can be dangerous to health if inhaled. Only use these solvents in well ventilated areas exhausted to the outdoors. Acetone and toluene are highly flammable and should not be used near an open flame or energized electrical equipment.

The Convectron Gauge may be baked to 150 °C nonoperating while under vacuum with the Module removed.

All materials are compatible for ultra high vacuum service, corrosion resistance, and bakeability. The envelope is type 304 stainless steel. All metallic joints in the envelope are welded. No solder is used within the envelope. The following materials are exposed to the vacuum: Type 304 stainless steel, Carpenter Alloy 52, Kovar, Kapton, gold-plated Tungsten or Platinum (for the sensor), borosilicate glass, and Dow-Corning 9015 glass. The blue trim cover is rated at 150 °C.

When the small sensor wire is contaminated with oil or other films, its emissivity or its diameter may be appreciably altered and a change of calibration will result. Cleaning with trichloroethylene, perchloroethylene, toluene, or acetone is possible but it must be done very carefully so as not to damage the sensor.

1. Hold the gauge with the main body horizontal and the port projecting upward at an angle of 45 degrees. Slowly fill it with solvent using a standard wash bottle with the spout inserted in the port to the point where it touches the screen. Let the solvent stand in the gauge for at least ten minutes. **Do not shake the gauge.** Shaking the gauge with liquid inside can damage the sensor wire. To drain the gauge, position it horizontally with the port facing downward. Slightly warming the gauge will help dry the gauge.
2. Allow the gauge to dry overnight with the port vertically downward and uncapped. Before re-installing the gauge on the system, be certain no solvent odor remains.
3. Install the gauge tube and reassemble the module.
4. Install the module onto the vacuum chamber and check it for proper operation.

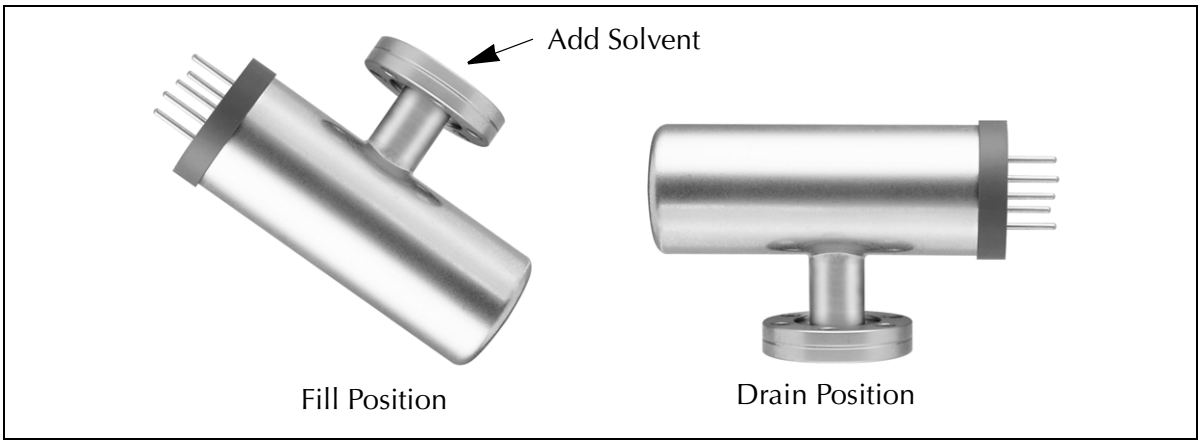

Figure 6-5 Add and Drain Solvent to Clean a Convectron Gauge

6.4.6 Replacing a Convectron Gauge Tube

If the gauge tube must be replaced, follow the procedures in Section 6.4.2 through Section 6.4.3 to remove the gauge tube.

Note: To avoid contaminating the Convectron gauge, wear sterile gloves during the removal and replacement procedure.

1. Install the replacement gauge tube and reassemble the module.
2. Install the module onto the vacuum chamber and check it for proper operation.

6.4.7 Baking the Vacuum Chamber with the Mini-Convectron Gauge Attached

The temperature of the Mini–Convectron Module electronics must not exceed 85 °C (185 °F). The electronics module must be removed from the vacuum chamber before baking the chamber at temperatures higher than 85 °C. Bakeout temperature of the Convectron Gauge, with the electronics removed, must not exceed 150 °C (302 °F).

To avoid shock, turn OFF electrical power before servicing the Mini–Convectron Module. Do not touch any gauge pins while the gauge is under vacuum.

1. To remove the electronics module from the Convectron gauge, follow the instructions provided in Section 6.4.3.
2. Bake the process chamber at the desired temperature for the desired time. The Convectron gauge tube must not exceed 150 °C.
3. Allow the system to cool to ambient temperature and reconnect the module electronics.
4. Connect the cables to the Mini-Convectron Module.

NOTES

Index

A
Ambient operating temperature range 14
Atmospheric Pressure Indications, Adjusting 38

B
Baud Rate 14, 20, 27

C
Calibration 38
Cleaning a Contaminated Convectron Gauge 62
Compatibility to UHV 16, 62
Connector
    DeviceNet 20
    Process Control 20
Convectron Gauge
    Atmospheric Pressure Indications, Adjusting 38
    Baking 14, 63
    Cleaning 62
    Display Panels 24
    Gas Type, Selecting 29
    Gauge Operation, Preparing for 29
    General Precautions 13
    Installation 17
    Materials Exposed to Vacuum 62
    Module, Description 13
    Pressure Measurement
        Other than Air or Nitrogen 29
    Repair/Test Procedure 61
    Replacing a Gauge Tube 63
    Specifications 14
    Tube Construction 16
    Use below 10-3 Torr 39
Convectron Gauge Module
    Dimensions 15
Convectron Module
    Check Status 45

D
Damage Requiring Service 58
DeviceNet
    Connector 20
    Interface Setup 41
    Protocol 49
    Standard Objects 49
    Trip Point Relays, Setting 45
    Troubleshooting Procedures 54
DeviceNet Output
    Error Codes 44, 55

E
Error Conditions
    DeviceNet 44, 55

F
FCC Verification 11

G
Gas Type, Selecting 29
Gases Other than Air or Nitrogen 31
Ground Test 8

I
Installation
    Configuring Relays for Application 22
    Convectron Gauge Module 18
    Environment and Location 19
    Important Considerations 17
    Wiring 19

L
LEDs
    Status 26

M
MAC ID Address Switches 27

O
Operation
    Requirements 28
    Theory 23
Ordering Information 4
Overpressure Conditions 9

P
Pre-operational Requirements 28
Pressure
    Indicated vs. True Pressure 32
Pressure Measurement
    Examples 31

Gases Other than Air or Nitrogen 29, 31
Preparing for 28
Process Control Connector 20
Process Control Relays
Setup 45

R
Repair
Mini-Convectron Module/Gauge 60
Replacement Convectron Gauge Tubes 4

S
Safety
Cautions and Warnings 7
Introduction 7
Service
Damage Requiring 58
Service Guidelines 11, 57
Setpoint Relays
Configuring for Application 22
Specifications
Mini-Convectron Module & Gauge 14
System Ground 8

T
Theory of Operation 23
Troubleshooting
DeviceNet 54
Symptoms and Possible Causes 59

W
Warranty Information 10
Wiring
Connectors 19

Series 275

Mini-Convectron® Vacuum Gauge Module with DeviceNet™ Digital Interface

Customer Service / Technical Support:

MKS Global Headquarters
2 Tech Drive, Suite 201
Andover MA, 01810 USA
Phone: +1-833-986-1686
Email: insidesales@mksinst.com
Visit our website at www.mksinst.com

Instruction Manual

Instruction manual part number 275563

Revision J - January 2020