A301-51-880
Issue T Original

Instruction Manual

EH Mechanical Booster Pumps

Description	Item Number
EH250 2.2kW Safe Area Pumps	A301-51-945, A301-52-946
EH250 1.5kW Safe Area Pumps	A301-51-935, A301-53-935, A301-52-936, A301-54-936
EH500 1.5kW Safe Area Pumps	A302-73-935, A302-74-936
EH500IND 2.2kW Safe Area Pumps	A302-71-945, A302-72-946
EH1200 3kW Safe Area Pumps	A305-92-935, A305-93-936
EH1200IND 3kW Safe Area Pumps	A305-90-935, A305-91-936
EH1200C 3 kW Flame Proof Pump	A305-56-982
EH1200 T3/T160/T4 3kW Flame Proof Pump	A305-57-900
EH2600 7.5kW Safe Area Pumps	A307-51-935, A307-53-935, A307-52-936, A307-54-936
EH2600IND 11kW Safe Area Pumps	A307-75-946, A307-76-982
EH2600C 11kW Flame Proof Pump	A307-56-982
EH2600 T160/T4 11kW Flame Proof Pump	A307-79-900
EH2600T3 11kW Flame Proof Pump	A307-41-935
EH4200 7.5kW Safe Area Pumps	A309-51-935, A309-53-935, A309-52-936
EH4200IND 11kW Safe Area Pumps	A309-75-946, A309-76-982
EH4200C 11kW Flame Proof Pump	A309-56-982
EH4200 T160/T4 11kW Flame Proof Pump	A309-79-900
EH4200T3 11kW Flame Proof Pump	A309-41-935

EDWARDS

WWW.EDWARDSVACUUM.COM

Declaration of Conformity

We, BOC Edwards,
Manor Royal,
Crawley,
West Sussex RH10 2LW, UK

declare under our sole responsibility that the product(s):

EH250 2.2kW Safe Area Pumps*	A301-51-945, A301-52-946
EH250 1.5kW Safe Area Pumps*	A301-51-935, A301-53-935, A301-52-936, A301-54-936
EH500 1.5kW Safe Area Pumps*	A302-73-935, A302-74-936
EH500IND 2.2kW Safe Area Pumps*	A302-71-945, A302-72-946
EH1200 3kW Safe Area Pumps*	A305-92-935, A305-93-936
EH1200IND 3kW Safe Area Pumps*	A305-90-935, A305-91-936
EH1200C 3 kW Flame Proof Pump**	A305-56-982
EH1200 T3/T160/T4 3kW Flame Proof Pump***	A305-57-900
EH2600 7.5kW Safe Area Pumps*	A307-51-935, A307-53-935, A307-52-936, A307-54-936
EH2600IND 11kW Safe Area Pumps*	A307-75-946, A307-76-982
EH2600C 11kW Flame Proof Pump**	A307-56-982
EH2600 T160/T4 11kW Flame Proof Pump***	A307-79-900
EH2600T3 11kW Flame Proof Pump***	A307-41-935
EH4200 7.5kW Safe Area Pumps*	A309-51-935, A309-53-935, A309-52-936
EH4200IND 11kW Safe Area Pumps*	A309-75-946, A309-76-982
EH4200C 11kW Flame Proof Pump**	A309-56-982
EH4200 T160/T4 11kW Flame Proof Pump***	A309-79-900
EH4200T3 11kWFlame Proof Pump***	A309-41-935

to which this declaration relates is in conformity with the following standard(s) or other normative document(s):

EN1012-2 (1997)	Compressors and Vacuum Pumps – Safety Requirements – Part 2: Vacuum Pumps.
EN60034-1 (1998)*	Electrical Rotating machines: ratings and operating characteristics.
EN13463-5 (2000)*	Non Electrical Equipment Intended for use in Potentially Explosive Atmospheres – Part 5 Protection by Constructional Safety.
EN60079-1 (2004)**	Electrical Apparatus for Explosive Gas Atmospheres, Flameproof Enclosure 'd'.
EN13463-1 (2001)*	Non-Electrical Equipment for Potentially Explosive Atmospheres Part 1: Basic Method and Requirements.

following the provisions of:

2006/95/EC	Low Voltage Directive.
89/336/EEC	Electromagnetic Compatibility Directive.
94/9/EC*	Equipment for use in Potentially Explosive Atmospheres (ATEX Directive).
98/37/EC	Machinery Safety Directive.

Ex II 2 Gc IIB/IIC T3/T160/T4* **Tech File Ref: TCF136**

C. Tunna.

23rd APRIL 2007

Clive Tunna, Global Technical Manager

Date and Place CRAWLEY.

This product has been manufactured under a quality system registered to ISO9001

P200-00-020 Issue B

Contents

Section Page

1 Introduction 1

1.1 Scope and definitions 1
1.2 Description 1
1.2.1 Overview 1
1.2.2 General construction 5
1.2.3 Principle of operation 5
1.2.4 Hydrokinetic drive 5
1.3 Chemical and ATEX compliant EH pumps 5
1.3.1 Flameproof motors 5
1.3.2 ATEX directive (94/9/EC): Europe only 6
1.3.3 Temperature classification 6
1.3.4 Hydrokinetic drive/gearbox purge 7
1.3.5 After-cooler 7
1.3.6 Normal operation 7
1.3.7 Abnormal operation 8
1.3.8 Electrostatic charges 8

2 Technical Data 9

2.1 Operating and storage conditions 9
2.2 Critical backing pressure 9
2.3 Performance 12
2.4 Mechanical data 12
2.5 Electrical data 13
2.6 Lubrication data 14
2.7 Hydrokinetic drive/gearbox nitrogen supply (EH1200C, EH1200 T3/T160/T4X, EH2600C, EH2600 T3X, EH2600 T160/T4X, EH4200C, EH4200 T3X, EH4200 T160/T4X only) 14
2.8 Cooling-water data 14
2.9 Noise and vibration data 15
2.10 Connections 15
2.11 Materials of construction of components exposed to pumped gases 16
2.12 Item Numbers 16

3 Installation 25

3.1 Safety 25
3.2 System requirements 25
3.3 Unpack and inspect 26
3.4 Fill the pump with oil 27
3.4.1 Hydrokinetic drive/gearbox 27
3.4.2 Shaft-seal reservoir 27
3.4.3 Gear-cover (all EH1200, EH2600 and EH4200 model pumps only) 28
3.5 Cooling-water connections (all EH1200, EH2600 and EH4200 model pumps only) 29
3.6 Electrical connections 29
3.6.1 Electrical supply configuration 29
3.6.2 Motor connections 30
3.6.3 Connect the motor thermistors (chemical and ATEX compliant EH pumps only) 31
3.7 Check the direction of pump rotation 38
3.8 Connect the hydrokinetic drive/gearbox purge nitrogen supply (chemical and ATEX compliant EH pumps only) 39
3.9 Connect the pump-inlet and outlet 40
3.10 External evacuation of hydrokinetic drive/gearbox (optional) 41

APT 11/07

© Edwards Limited 2007. All rights reserved.
Edwards and the Edwards logo are trademarks of Edwards Limited.

Contents

4 Operation 43

4.1 Operational safety 43
4.2 Start-up procedure 43
4.2.1 Pre-start checks 43
4.2.2 Start-up 44
4.3 Shut-down 44

5 Maintenance 45

5.1 Safety information 45
5.2 Maintenance plan 46
5.3 Check the oil-levels 46
5.4 Inspect the pump connections 46
5.5 Change the pump oil 47
5.6 Lubricate the rear-bearing (All EH250 and EH500 model pumps only) 48
5.7 Overhaul the pump 49

6 Storage and Disposal 51

6.1 Storage 51
6.2 Disposal 51

7 Service and Spares 53

7.1 Introduction 53
7.2 Service 53
7.3 Spares 53

Illustrations

Figure Page

1 All EH250 and EH500 pump variants 3
2 All EH1200, EH2600 and EH4200 pump variants 4
3 EH250/EH250IND dimensions (mm)* 17
4 EH500/EH500IND dimensions (mm)* 18
5 EH1200/EH1200IND dimensions (mm) 19
6 EH1200C/EH1200 T3/T160/T4 dimensions (mm) 20
7 EH2600/EH2600IND dimensions (mm) 21
8 EH2600C/EH2600 T3/EH2600 T160/T4 dimensions (mm) 22
9 EH4200/EH4200IND dimensions (mm) 23
10 EH4200C/EH4200 T3/EH4200 T160/T4 dimensions (mm) 24
11 Sight glasses 28
12 Example control circuit 32
13 Electrical supply configuration A 34
14 Electrical supply configuration B 34
15 Electrical supply configuration C 35
16 Electrical supply configuration D 35
17 Electrical supply configuration E 36
18 Electrical supply configuration F 36
19 Electrical supply configuration G 37
20 Electrical supply configuration H 37
21 Electrical supply configuration I 38
22 Flange loading limits 42
23 Lubricate the rear bearing (EH250, EH500 and EH500IND pumps only) 49

© Edwards Limited 2007. All rights reserved.
Edwards and the Edwards logo are trademarks of Edwards Limited.

Tables

Table | Page

1 Operating and storage conditions 9
2 Temperature classifications 9
3 Pressure ratio figures 10
4 DPS dry pump and EH mechanical booster pump combinations for T3 10
5 DPS dry pump and EH mechanical booster pump combinations for T160 10
6 CPH dry pump and EH mechanical booster pump combinations for T160 11
7 CPH dry pump and EH mechanical booster pump combinations for T3 11
8 Performance data 12
9 Mechanical data 12
10 Electrical data 13
11 Lubrication data 14
12 Hydrokenetic drive/gearbox purge nitrogen supply data 14
13 Cooling water supply data: EH pumps in non-ATEX systems 14
14 Cooling-water supply data: EH pumps in ATEX systems 15
15 Noise and vibration data 15
16 Connections 15
17 Materials of construction 16
18 Item numbers 16
19 Motor cable-gland hole sizes 31
20 Electrical supply connection configurations 33
21 Maintenance plan 45
22 Spare item numbers 53
23 EH250 and EH500 spare parts 53
24 EH1200 spare parts 54
25 EH2600 and EH4200 spare parts 54

Associated publications

Publication title	Publication number
Vacuum pump and vacuum system safety - chemical and industrial vacuum systems	P400-40-100
ATEX Instruction Manual	P600-60-200

© Edwards Limited 2007. All rights reserved.
Edwards and the Edwards logo are trademarks of Edwards Limited.

This page has been intentionally left blank.

© Edwards Limited 2007. All rights reserved.
Edwards and the Edwards logo are trademarks of Edwards Limited.

1 Introduction

1.1 Scope and definitions

This manual provides installation, operation and maintenance instructions for the following Edwards EH mechanical booster pumps:

- Safe area EH mechanical booster pumps:
  EH250, EH250IND EH500, EH500IND, EH1200, EH1200IND, EH2600, EH2600IND, EH4200 and EH4200IND
- Chemical EH mechanical booster pumps:
  EH1200C, EH2600C, EH4200C
- ATEX compliant EH mechanical booster pumps:
  EH1200T3/T160/T4X, EH2600T160/T4X, EH42000T3X, EH4200T160/T4X

Where appropriate, the titles EH mechanical booster pump, safe area EH mechanical booster pump, ATEX compliant EH mechanical booster pumps and chemical EH mechanical booster pump are abbreviated to EH pump, safe area EH pump, ATEX compliant EH pump and chemical EH pump respectively in the remainder of this manual.

You must use your EH pump as specified in this manual.

Read this manual before you install and operate your EH pump. Important safety information is highlighted as WARNING and CAUTION instructions; you must obey these instructions. The use of WARNINGS and CAUTIONS is defined below.

WARNING

Warnings are given where failure to observe the instruction could result in injury or death to people.

CAUTION

Cautions are given where failure to observe the instruction could result in damage to the equipment, associated equipment and process.

The units used throughout this manual conform to the SI international system of units of measurement.

1.2 Description

1.2.1 Overview

The EH pumps are compact and have high pumping speeds. You must use the EH pump with a suitable backing pump. The EH pumps can operate with a maximum continuous inlet pressure of 1000 mBar. You can achieve lower system pressures by the use of two or more EH pumps in series.

On all EH pumps, the hydrokinetic drive/gearbox is connected to the pump outlet by a pressure equalisation passageway, and forms an integral part of the vacuum system. The connecting passageway has a filter which removes debris and so prevents contamination of the lubricating oil and bearings. For an even cleaner system, you can evacuate the end-cover/gear cover by connection of the evacuation port (Figure 1, item 5 or Figure 2, item 6) to the pump-inlet or to an external vacuum pump.

The hydrocarbon safe area, ATEX compliant and chemical EH pumps use hydrocarbon oils, such as Edwards Ultragrade 20. Versions of the safe area EH pumps for use with PFPE (perfluoropolyether) oils are also available for vacuum systems in which oxygen or other reactive or corrosive gases are pumped. The EH pumps must **not** be used to pump peroxides.

© Edwards Limited 2007. All rights reserved.
Edwards and the Edwards logo are trademarks of Edwards Limited.

All of the EH2600 and EH4200 model pumps have an after-cooler in the pump-outlet, to reduce the exhaust gas and rotor temperature.

The safe area EH pumps are safe to handle non-flammable gases and vapours within the normal operating parameters of the pumps, as defined in this manual.

The chemical, and ATEX compliant EH pumps, when used with suitable backing pumps, are designed to pump flammable gases within the T (temperature) classification defined in the pump description (see Section 1.3.3).

Note: *All 60 Hz booster pumps are given a T3 temperature rating.*

In order to comply with temperature classification requirements, a chemical, and ATEX compliant EH pump must be connected to a backing pump that provides a backing pressure lower than the critical backing pressure and the pressure ratio of the combination is lower than the maximum stated in Table 3 or be used in a pumping system recommended by Edwards: refer to Section 1.3.3 and 2.2.

All of the EH pumps have ISO inlet-flange and outlet-flange connections.

© Edwards Limited 2007. All rights reserved.
Edwards and the Edwards logo are trademarks of Edwards Limited.

Figure 1 - All EH250 and EH500 pump variants

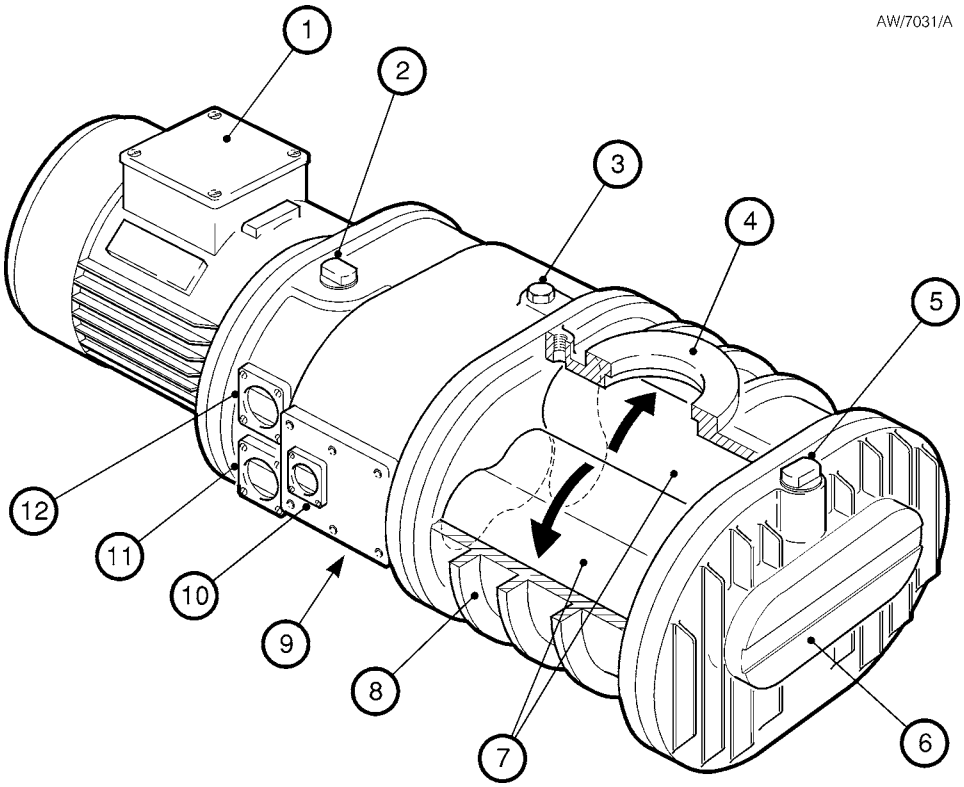

1. Terminal-box
2. Shaft-seal reservoir vented oil filler-plug
3. Hydrokinetic drive/gearbox oil filler-plug
4. Inlet-flange
5. External evacuation point
6. End-cover
7. Rotors
8. Stator housing
9. Hydrokinetic drive/gearbox oil drain-plug (under the pump)
10. Direction of rotation sight-glass
11. Oil-level sight-glass (hydrokinetic drive/gearbox)
12. Oil-level sight-glass (shaft-seal reservoir)

© Edwards Limited 2007. All rights reserved.
Edwards and the Edwards logo are trademarks of Edwards Limited.

Figure 2 - All EH1200, EH2600 and EH4200 pump variants

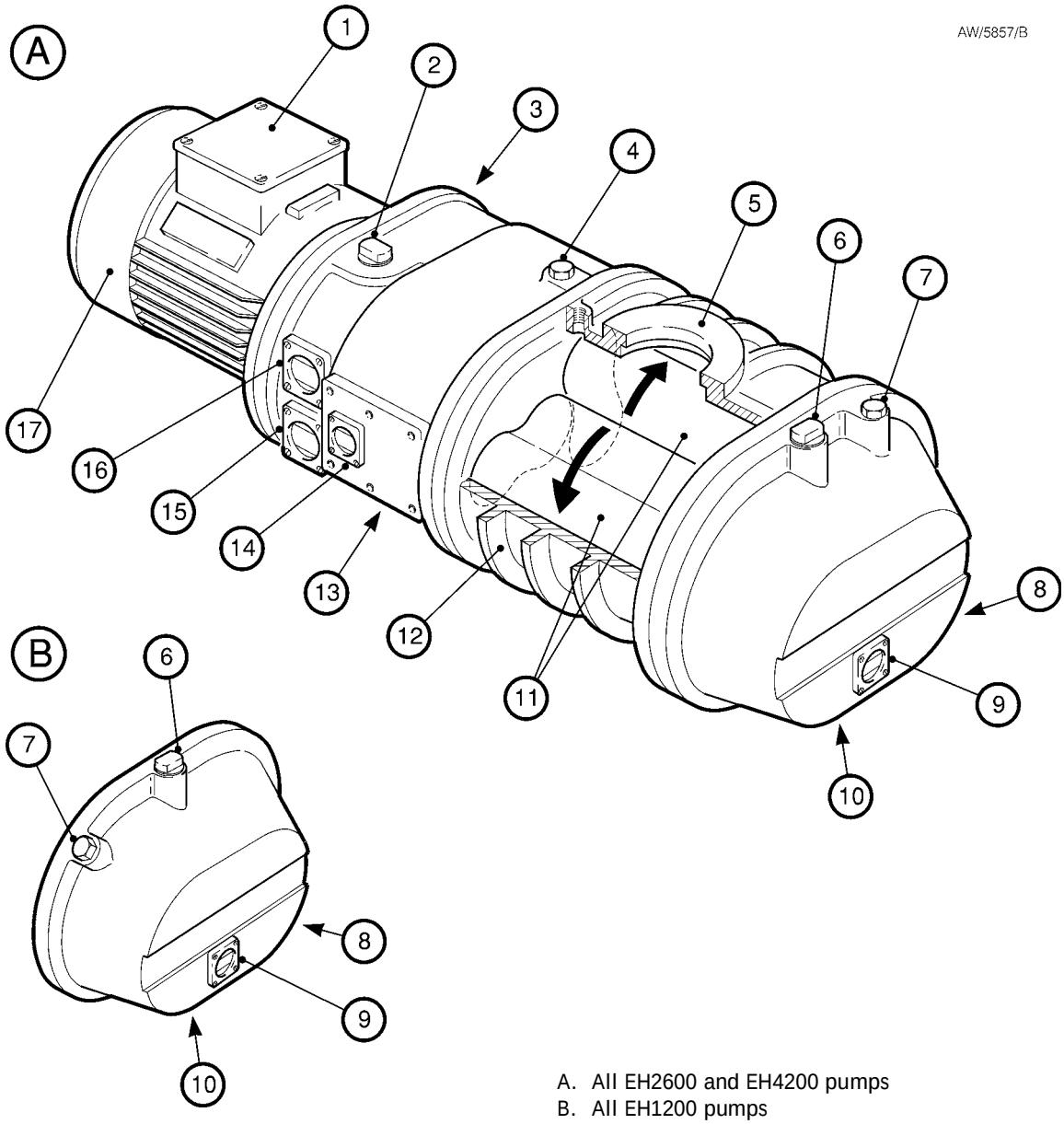

A. All EH2600 and EH4200 pumps
B. All EH1200 pumps

1. Terminal-box
2. Shaft-seal reservoir vented oil filler-plug
3. Cooling-water connection
4. Hydrokinetic drive/gearbox oil filler-plug *
5. Inlet-flange
6. External evacuation point
7. Gear-cover oil filler-plug
8. Cooling-water connection
9. Oil-level sight-glass (gear-cover)
10. Gear-cover oil drain-plug (under the pump)
11. Rotors
12. Stator housing
13. Hydrokinetic drive/gearbox oil drain-plug (under the pump)
14. Direction of rotation sight-glass †
15. Oil-level sight-glass (hydrokinetic drive/gearbox)
16. Oil-level sight-glass (shaft-seal reservoir)
17. Motor fan cover

* *Safe area EH pumps only. On the chemical, and ATEX compliant EH pumps, this is a combined hydrokinetic drive/gearbox oil filler-plug and purge connector.*

† *EH1200 pumps only.*

© Edwards Limited 2007. All rights reserved.
Edwards and the Edwards logo are trademarks of Edwards Limited.

1.2.2 General construction

The EH pumps are positive displacement Roots vacuum pumps. The pump mechanism is driven by a three-phase electric motor through a hydrokinetic drive (see Section 1.2.4).

The safe area EH pumps are all fitted with safe area motors. The chemical, and ATEX compliant EH pumps are all fitted with flameproof motors (see Section 1.3.1). All of the motors are air-cooled.

The pump shafts and rotors are made of cast SG iron. The internal and external shaft-seals are made of polytetrafluoroethylene (PTFE) or fluoro-elastomer.

The pump-bearings, gears and seals are lubricated by oil fed from reservoirs in the hydrokinetic drive/gearbox. A series of seals stops the oil from reaching the vacuum side of the EH pump. The hydrokinetic drive/gearbox is evacuated. You can inspect the oil-levels through sight-glasses which are fitted to the hydrokinetic drive/gearbox. Oil-filler, oil-drainage and external evacuation connections are provided on the hydrokinetic drive/gearbox.

The timing gears on all of the EH1200, EH2600 and EH4200 model pumps are lubricated by oil inside the gear-cover. An oil-filler connection is provided and you can inspect the oil-level through a sight-glass fitted to the gear-cover.

1.2.3 Principle of operation

The EH pump is shown in Figure 1 and 2. The motor-shaft drives one of the rotors through the hydrokinetic drive. The 1:1 gears inside the hydrokinetic drive/gearbox drive the second rotor in the opposite direction inside the stator housing. A small, accurately gauged, clearance is maintained between the rotors and between each rotor and the stator wall. This clearance allows the EH pump to operate at high speed without mechanical wear and without the need for lubrication inside the swept volume.

1.2.4 Hydrokinetic drive

The hydrokinetic drive consists of a fluid-coupling which connects the electric-motor shaft to the rotor. This system is configured so that when the gas-load is high, the rotational speed of the rotors is reduced. As the gas-load decreases, the rotors accelerate to full speed. This allows continuous operation of the EH pump over the vacuum range without the risk of overloading the motor and removes the need for bypass-valves and associated pipelines.

The fluid-coupling is viscosity sensitive. The two versions of the EH pump (for hydrocarbon and PFPE oils) have fluid-coupling drives which are specifically designed for the type of oil used in the pump.

1.3 Chemical and ATEX compliant EH pumps

1.3.1 Flameproof motors

All of the EH1200C, EH1200 T3/T160/T4X, EH2600C, EH2600T3X, EH2600 T160/T4X, EH4200C, EH4200 T3X and EH4200 T160/T4X:

- Pumps suitable for 50 Hz operation are fitted with a flameproof motor approved to EEx d, Gas Group IIA, IIB, Temperature Class T4.
- Pumps suitable for 60 Hz operation are fitted with a flameproof motor approved to CSA, Division 1 area, Gas Class I Group C & D, and Dust Class II Group F & G, Temperature Class T3C.
- If you want to operate your pump in a IIC external environment you have to fit a IIC motor to your EH mechanical booster.

© Edwards Limited 2007. All rights reserved.
Edwards and the Edwards logo are trademarks of Edwards Limited.

1.3.2 ATEX directive (94/9/EC): Europe only

ATEX compliant EH pumps with an internal T3X or T160/T4X temperature classification (see Section 1.3.3) may be used in an ATEX-compliant vacuum system only if the pumps are configured and used in accordance with the requirements of this manual. For ATEX compliant systems using an EH booster pump in combination with a DPS dry pump also the requirements of the ATEX instruction manual (see 'Associated publications' at the end of the Contents list) must be met.

Note: *An 'X' suffix to the EH booster ATEX classification indicates that there are special conditions for safe use of the booster. For EH mechanical boosters that have not been sold as part of a Edwards approved ATEX system please give special attention to Section 2.2 and Table 2 and 3.*

ATEX compliant systems supplied by Edwards will be certified in accordance with the ATEX directive, and will be identified by an ATEX system rating label.

If you want to fit an ATEX compliant EH pump with a T3X or T160/T4X temperature classification into your own ATEX compliant vacuum system, you must install and operate the EH pump in accordance with the requirements of this instruction manual. Please pay special attention to Section 1.3.3 about the temperature classification of your EH pump, Section 1.3.4 about the hydrokinetic gearbox purge, Section 1.3.6 about the requirements of constructional safety, Section 1.3.7 abnormal use, Section 2.2 about the critical backing pressure and the pressure ratio between your EH mechanical booster pump and your backing pump and Section 2.8 about the minimum cooling water flow. You must also carry out your own Safety Risk Assessment as part of your system certification in order to ensure that your system is safe. If necessary, contact Edwards for certification advice.

ATEX compliant EH pumps with an internal T3X or T160/T4X temperature classification are suitable for operation in ATEX compliant systems rated as follows:

Ex II 2 G c IIB T3 or Ex II 2 G c IIB T160/T4

The notations used in these ratings are as follows:

Ex	specifies that the ATEX compliant EH pump can be used in a potentially explosive atmosphere.
II	Equipment group II
2G	Equipment category 2 (gas)
c	constructional safety
IIB	Suitable to pump gas group IIB
T3/T160/T4	Gas auto-ignition temperature: see Section 1.3.3.

Refer to Section 2 of this manual for the necessary EH pump operating conditions, and, if your booster is part of a Edwards vacuum system, to the ATEX Instruction manual and to your system instruction manual for specific details of the system.

Note: *If the system rating has an "X" suffix, this indicates that there are special conditions for the safe use of your system: refer to the ATEX Instruction Manual and to your system manual for details.*

1.3.3 Temperature classification

The temperature classifications applied to the chemical and ATEX compliant EH pumps relate to the auto-ignition temperature of flammable materials that can be pumped:

- The EH1200, EH2600, EH4200, ATEX compliant and chemical EH pumps that have a T3 classification are suitable for pumping flammable materials that have an auto-ignition temperature greater than 200 ^{o}C.

© Edwards Limited 2007. All rights reserved.
Edwards and the Edwards logo are trademarks of Edwards Limited.

- The EH1200, EH2600 and EH4200 ATEX compliant EH pumps that have a T160 temperature classification are suitable for pumping flammable materials that have an auto-ignition temperature greater than 160 ^{o}C.
- The EH1200, EH2600 and EH4200 ATEX compliant pumps that have a T4 classification are suitable for pumping flammable materials that have an auto-ignition temperature greater than 135 ^{o}C.

Refer to Section 2 of this manual for the necessary EH pump operating conditions, to the ATEX Instruction Manual, and to your system manual for specific details of the system in which the EH pump is fitted.

1.3.4 Hydrokinetic drive/gearbox purge

WARNING

When using the EH ATEX compliant booster in either a Edwards ATEX compliant system or in your own certified ATEX vacuum pumping system you must ensure that the gearbox purge is connected to your booster and the Nitrogen supply is guaranteed. Please refer to Section 2.7 for operating conditions.

A pipeline connector is provided on the oil filler of the hydrokinetic drive/gearbox of all of the chemical and ATEX compliant EH pumps. You can connect a suitable purge gas supply to this connector, to provide for purge of the hydrokinetic drive with nitrogen at positive pressure. This will purge the shaft-seals, and prevent the entry of corrosive or toxic vapours into the hydrokinetic drive and gear-cover.

A fixed restrictor in the connector ensures that the correct amount of nitrogen is allowed to flow into the hydrokinetic drive/gearbox.

1.3.5 After-cooler

On the EH2600C, EH2600T3X, EH2600T160/T4X, EH4200C, EH4200T3X, EH4200T160/T4X chemical and ATEX compliant EH pumps, the nickel-plated after-cooler is resistant to corrosive vapours which may condense on it during pump operation (depending on the application).

1.3.6 Normal operation

WARNING

The ATEX compliant EH pumps rely on the principle of constructional safety to pump flammable gases and vapours safely. Process deposits (which could form due to condensation of process vapours) do not normally occur in booster pumps. However, to conform with constructional safety requirements, it is your responsibility to ensure that process deposits do not occur in the ATEX compliant EH pump (see below).

WARNING

The ATEX compliant EH pumps rely on the principle of constructional safety to pump flammable gases and vapours safely. You must protect the ATEX compliant EH pump from the ingress of particles that could cause an ignition of flammable gas or vapour in the pump. If particles could enter the ATEX compliant EH pump during system commissioning, you must fit a suitable inlet filter or screen, which you should then remove before process operation (refer to Section 3.9).

The ATEX compliant EH pumps rely on the pump's constructional safety for the safe pumping of flammable materials. In normal operation, as defined by this manual, the ATEX compliant EH pumps are safe for the pumping of flammable materials where there is no risk that the build-up of process deposits could reduce the operating clearances of the pump mechanism, and so cause a potential ignition hazard.

Where there is no such risk, the ATEX compliant EH pumps can be used to pump flammable materials from gas group IIA, IIB and IIC within the normal parameter defined in this manual.

© Edwards Limited 2007. All rights reserved.
Edwards and the Edwards logo are trademarks of Edwards Limited.

1.3.7 Abnormal operation

WARNING

Misuse of the chemical and ATEX compliant EH pump as described below is strictly prohibited:

- Pumping gases with temperatures greater than the system temperature classification (see Section 1.3.3).
- Pumping hydrocarbon oxides.
- Pumping pyrophoric gases.
- Pumping gases that tend to self-decompose, or that are chemically unstable.
- Pumping peroxides or oxygen enriched atmospheres with ATEX certified pumps. For non-ATEX applications PFPE versions of the pumps can be offered for oxygen enriched atmospheres and peroxides.
- Use of the chemical and ATEX compliant EH pump with materials which have auto-ignition temperatures below the defined temperature rating of the chemical EH pump.
- Pumping of, or use of the ATEX compliant EH pump in the presence of, explosive dust atmospheres.
- Use of the ATEX compliant EH pump in ambient conditions other than those specified in Section 2.1.

1.3.8 Electrostatic charges

Pure gas doesn't create electrostatic charges. There is a danger of electrostatic charges when the gas pumped contains droplets or particles.

Always ensure that the pump is earthed so there is no danger of igniting flammable gases due to electrostatic discharges.

© Edwards Limited 2007. All rights reserved.
Edwards and the Edwards logo are trademarks of Edwards Limited.

2 Technical Data

2.1 Operating and storage conditions

Notes: *1. For operation between -20 ºC and 5 ºC, we recommend that the EH pump is operated continuously except when shut-down is necessary for maintenance purposes. Note also the cooling-water requirements given in Section 2.8.*

2. Because of the flexibility of the hydrokinetic drives, there is a wide range of backing pumps which are suitable for use with the EH Mechanical Booster pumps. However, note the restrictions for chemical and ATEX compliant EH pump critical backing pressure given in Section 2.2. If necessary, contact Edwards for advice.

Table 1 - Operating and storage conditions

Ambient operating temperature range Ambient storage temperature range Maximum ambient operating humidity	-20 to 40 ºC -20 to 80 ºC 90% RH
Protection degree (as defined by IEC 529)	IP44
Recommended backing pumps	See Note above

2.2 Critical backing pressure

WARNING

For ATEX compliant EH pumps, which have been sold to you on their own and not as part of an approved Edwards ATEX system (which are fitted with flameproof motors), the outlet pressure of the ATEX compliant EH pump must not exceed the critical backing pressure at zero flow, as specified below. If this critical pressure is exceeded, internal temperatures in the ATEX compliant EH pump may exceed the temperature classification (refer to Section 1.3.3) and render it invalid. This can result in an internal ignition of the pumped gases/vapours.

If you fit an isolation valve between the ATEX compliant EH pump and the backing pump, you must interlock the operation of the valve with the operation of the ATEX compliant EH pump, so that closure of the valve results in shut-down of the ATEX compliant EH pump.

If this critical backing pressure is exceeded, the pump rotors have to do additional compressive work against the backing pressure, which can cause the rotor temperature to exceed the temperature classification limits, as there is no flow of cooling gas through the pump. The critical backing pressure at zero flow is equivalent to the ultimate pressure of the backing pump, when an isolation valve upstream of the ATEX compliant EH pump is closed.

The critical backing pressure at zero flow for your EH booster pump depends on the temperature classification (please refer to Section 1.3.3 Temperature Classification) of the mechanical booster pump. The following critical backing pressures apply for different temperature classifications for standalone boosters which haven't been sold as part of an approved Edwards ATEX system:

Table 2 - Temperature classifications

Temperature Classification	Critical backing pressure [mbar]
T3	40
T160	30
T4	20

If you want to use the EH booster outside the critical backing pressure specified above, please contact Edwards for advice.

© Edwards Limited 2007. All rights reserved.
Edwards and the Edwards logo are trademarks of Edwards Limited.

In addition, the pressure ratio between the EH mechanical booster pump and the backing pump has to be kept within certain limits to ensure that the temperature limits are not exceeded.

The following general pressure ratio figures apply in relation to the temperature class of your vacuum pumping system:

Table 3 - Pressure ratio figures

Pressure ratio at duty point	Temperature class of vacuum system
3:1	T3
2.5: 1	T160
2:1	T4

If you want to use your booster outside these limits, please contact Edwards for advice.

The following tables show possible combinations of Edwards EH mechanical booster pump with Edwards DPS Chemical Dry pump.These systems are Edwards approved ATEX systems.

Please note that the following tables refer to 50 Hz operation only.

For Edwards EH mechanical booster/ DPS dry pump combinations depending on temperature class of the system:

Table 4 - DPS dry pump and EH mechanical booster pump combinations for T3

Booster Pump	Dry Pump			
	DPS 80	DPS 160	DPS 250	DPS400
EH250 T3	✔	✔	✔	✔
EH500 T3	✔	✔	✔	✔
EH1200 T3	✔	✔	✔	✔
EH2600 T3	*	*	✔	✔
EH4200 T3	*	*	*	✔

✔ *Do not require extra protection*
* *Consult Edwards for advice*

Table 5 - DPS dry pump and EH mechanical booster pump combinations for T160

Booster Pump	Dry Pump			
	DPS 80	DPS 160	DPS 250	DPS400
EH250 T160	✔	✔	✔	✔
EH500 T160	✔	✔	✔	✔
EH1200 T160	✔	✔	✔	✔
EH 2600 T160	*	*	✔	✔
EH 4200 T160	*	*	*	✔

✔ *Do not require extra protection*
* *Consult Edwards for advice*

© Edwards Limited 2007. All rights reserved.
Edwards and the Edwards logo are trademarks of Edwards Limited.

For EH mechanical booster/CPH dry pump combination depending on the temperature class of the system:

Table 6 - CPH dry pump and EH mechanical booster pump combinations for T160

Booster Pump	Dry Pump			
	CPH 250		CPH 400	
	50 Hz	60 Hz	50 Hz	60 Hz
EH1200 T160	✔	*	✔	*
EH2600 T160	✔	*	✔	*
EH4200 T160	*	*	✔	*

✔ *Do not require extra protection*
* *Consult Edwards for advice*

Table 7 - CPH dry pump and EH mechanical booster pump combinations for T3

Booster Pump	Dry Pump			
	CPH 250		CPH 400	
	50 Hz	60 Hz	50 Hz	60 Hz
EH1200 T3	✔	✔	✔	✔
EH2600 T3	✔	✔	✔	✔
EH4200 T3	*	*	✔	✔

✔ *Do not require extra protection*
* *Consult Edwards for advice*

© Edwards Limited 2007. All rights reserved.
Edwards and the Edwards logo are trademarks of Edwards Limited.

2.3 Performance

Table 8 - Performance data

Rotational speed: 50 Hz electrical supply 60 Hz electrical supply			 0 to 2900 r min^{-1} 0 to 3500 r min^{-1}	
Maximum outlet pressure (see Section 1.2.4)			1000 mbar absolute, 1 x 10^5 Pa	
Pressure differential across EH pump (determined by the hydrokinetic drive):				
Pump	**50 Hz electrical supply**		**60 Hz electrical supply**	
EH250/EH250IND	0 to 180 mbar	0 to 1.8 x 10^4 Pa	0 to 150 mbar	0 to 1.5 x 10^4 Pa
EH500/EH500IND	0 to 110 mbar	0 to 1.1 x 10^4 Pa	0 to 90 mbar	0 to 9 x 10^3 Pa
EH1200/EH1200IND	0 to 90 mbar	0 to 0.9 x 10^4 Pa	0 to 75 mbar	0 to 7.5 x 10^3 Pa
EH1200C	-	-	0 to 75 mbar	0 to 7.5 x 10^3 Pa
EH1200 T3/T160/T4X	0 to 76 mbar	0 to 7.6 x 10^3 Pa	-	-
EH2600	0 to 80 mbar	0 to 8 x 10^3 Pa	0 to 67 mbar	0 to 6.7 x 10^3 Pa
EH2600IND	0 to 120 mbar	0 to 1.2 x 10^4 Pa	0 to 67 mbar	0 to 6.7 x 10^3 Pa
EH2600C	-	-	0 to 67 mbar	0 to 6.7 x 10^3 Pa
EH2600 T3X	0 to 114 mbar	0 to 1.14 x 10^4 Pa	-	-
EH2600 T160/T4X	0 to 75 mbar	0 to 7.5 x 10^3 Pa	-	-
EH4200	0 to 60 mbar	0 to 6 x 10^3 Pa	0 to 50 mbar	0 to 5 x 10^3 Pa
EH4200IND	0 to 70 mbar	0 to 7 x 10^3 Pa	0 to 50 mbar	0 to 5 x 10^3 Pa
EH4200C	-	-	0 to 50 mbar	0 to 5 x 10^3 Pa
EH4200 T3X	0 to 64 mbar	0 to 6.4 x 10^3 Pa	-	-
EH4200 T160/T4X	0 to 52 mbar	0 to 5.2 x 10^3 Pa	-	-

2.4 Mechanical data

Table 9 - Mechanical data

Dimensions	See Figure 3 to 10			
Mass:	EH250	61 kg	EH1200	149 kg
	EH250IND	66 kg	EH1200IND	149 kg
	EH500	69 kg	EH1200C	170 kg
	EH500IND	74 kg	EH1200 T3/T160/T4X	170 kg
	EH2600	308 kg	EH4200IND	380 kg
	EH2600IND	345 kg	EH4200C	425 kg
	EH2600C	415 kg	EH4200 T3X	495 kg
	EH2600 T3X	415 kg	EH4200 T160/T4X	495 kg
	EH2600 T160/T4X	415 kg		

© Edwards Limited 2007. All rights reserved.
Edwards and the Edwards logo are trademarks of Edwards Limited.

2.5 Electrical data

Note: *The motors of EH250, EH500 and EH500IND pumps are supplied configured for 'low voltage' operation (230 V and lower), the motors of all other pumps are supplied configured for 'high voltage' operation (380 V and higher): refer to Section 3.6.*

Table 10 - Electrical data

Electrical supply voltage		220/240/380/415 V, 50 Hz or 208/230/460 V, 60 Hz						
Number of phases		3						
Voltage tolerance:								
50 Hz electrical supply		± 10%						
60 Hz electrical supply		-2.5%, +5%						
Full load current ratings		See below and refer to motor rating plate						
Pump(s)		**220 V 50 Hz**	**240 V 50 Hz**	**380 V 50 Hz**	**415 V 50 Hz**	**208 V 60 Hz**	**230 V 60 Hz**	**460 V 60 Hz**
EH250 EH500	Full load (A) Rating (kW)	6.3 1.5	5.8 1.5	3.7 1.5	3.4 1.5	6.1 1.5	5.5 1.5	2.8 1.5
EH250IND EH500IND	Full load (A) Rating (kW)	7.8 2.2	7.4 2.2	4.5 2.2	4.3 2.2	9.7 2.2	8.8 2.2	4.4 2.2
EH1200 EH1200IND	Full load (A) Rating (kW)	11.1 3.0	10.2 3.0	6.4 3.0	5.9 3.0	11.9 3.0	10.7 3.0	5.4 3.0
EH1200C	Full load (A) Rating (kW)	- -	- -	- -	- -	- -	- -	5.0 3.0
EH1200 T3/T160/ T4X	Full load (A) Rating (kW)	10.4 3.0	9.9 3.0	6.0 3.0	5.7 3.0	- -	- -	- -
EH2600	Full load (A) Rating (kW)	19.8 7.5	18.2 7.5	11.5 7.5	10.5 7.5	20.9 7.5	18.9 7.5	9.5 7.5
EH2600IND	Full load (A) Rating (kW)	- -	- -	21.5 11.0	20.7 11.0	- -	34.8 11.0	17.4 11.0
EH2600C	Full load (A) Rating (kW)	- -	- -	- -	- -	- -	36.3 11.0	18.1 11.0
EH2600 T3X EH2600 T160/T4X	Full load (A) Rating (kW)	- -	- -	20.8 11.0	19.5 11.0	- -	- -	- -
EH4200	Full load (A) Rating (kW)	19.8 7.5	18.2 17.5	11.5 7.5	10.5 7.5	20.9 7.5	18.9 7.5	9.5 7.5
EH4200IND	Full load (A) Rating (kW)	- -	- -	21.5 11.0	20.7 11.0	- -	34.8 11.0	17.4 11.0
EH4200C	Full load (A) Rating (kW)	- -	- -	- -	- -	- -	36.3 11.0	18.1 11.0
EH4200 T3X EH4200 T160/T4X	Full load (A) Rating (kW)	- -	- -	20.8 11.0	19.5 11.0	- -	- -	- -

© Edwards Limited 2007. All rights reserved.
Edwards and the Edwards logo are trademarks of Edwards Limited.

2.6 Lubrication data

Note: *Edwards Material Safety Data Sheets for the oils and grease specified below are available on request.*

Table 11 - Lubrication data

Recommended oil type			
Hydrocarbon pumps	Ultragrade 20		
PFPE pumps	Fomblin YVAC 16/6		
Recommended grease type *	Fomblin AR555		
Oil capacity:	**All EH250**	**All EH500**	**All EH1200**
Gear-cover	-	-	1.25
Hydrokinetic drive/gearbox	1.5	1.5	2.4
Shaft-seal reservoir	0.125	0.125	0.125
	All EH2600	**All EH4200**	
Gear-cover	3.5	3.5	
Hydrokinetic drive/gearbox	6.5	6.5	
Shaft-seal reservoir	0.15	0.15	

* *For use with all EH250 and EH500 pumps*

2.7 Hydrokinetic drive/gearbox nitrogen supply (EH1200C, EH1200 T3/T160/T4X, EH2600C, EH2600 T3X, EH2600 T160/T4X, EH4200C, EH4200 T3X, EH4200 T160/T4X only)

Table 12 - Hydrokenetic drive/gearbox purge nitrogen supply data

Regulated pressure	**0.3 to 0.5 bar gauge, 3 x 10^4 to 5 x 10^4 Pa**

2.8 Cooling-water data

Notes:

1. *If any EH1200, EH2600 or EH4200 model pump is used in an ATEX system, the EH pump must be operated with cooling-water. This is safety critical, and your system must incorporate a flow-switch (connected to the cooling-water outlet) which monitors the flow rate of the cooling-water through the EH pump; the flow-switch must be connected to your control system, which must be configured to shut down the EH pump when the cooling-water flow through the EH pump is too low (see Table 14 for the minimum cooling-water flow rates). Refer to the ATEX instruction manual for further details.*

2. *If any EH1200 model pump is not part of an ATEX system, you can operate the EH pump continuously without cooling-water if the inlet pressure is kept below 5 mbar (5 x 10^2 Pa) and the pumpdown time is no longer than 10 minutes.*

Table 13 - Cooling water supply data: EH pumps in non-ATEX systems

Recommended cooling-water flow (with inlet temperature of 20 ºC)	
EH1200 pumps	3 l min^{-1}
EH2600 pumps	6 l min^{-1}
EH4200 pumps	6 l min^{-1}
Recommended cooling-water supply pressure	2 to 6 bar gauge, 3 to 7 bar absolute, 3 x 10^5 to 7 x 10^5 Pa
Permissible temperature range	5 to 35 ºC

© Edwards Limited 2007. All rights reserved.
Edwards and the Edwards logo are trademarks of Edwards Limited.

Table 14 - Cooling-water supply data: EH pumps in ATEX systems

Minimum cooling-water flow (with inlet temperature of 20 ºC)	
EH1200 T3/T160/T4X EH2600 T3/EH2600 T160/T4X EH4200 T3/EH4200 T160/T4X	2 l min^{-1} 4 l min^{-1} 4 l min^{-1}
Recommended cooling-water supply pressure	2 to 6 bar gauge, 3 to 7 bar absolute, 3 x 10^5 to 7 x 10^5 Pa
Permissible temperature range	5 to 35 ºC

2.9 Noise and vibration data

Table 15 - Noise and vibration data

Vibration level	< 1.8 mm s^{-1} r.m.s. in the range 10 to 1000 Hz				
Continuous A-weighted sound pressure level measured at 1 metre from the EH pump:					
	EH250	**EH500**	**EH1200**	**EH2600**	**EH4200**
	72 dB(A)	72 dB(A)	77 dB(A)	83 dB(A)	83 dB(A)

2.10 Connections

Table 16 - Connections

Cooling-water connections:					
Inlet	$^3/_8$ inch BSP male				
Outlet	$^3/_8$ inch BSP male				
Hydrokinetic drive/gearbox purge connection *	$^1/_4$ inch compression fitting				
Vacuum connections:					
	EH250	**EH500**	**EH1200**	**EH2600**	**EH4200**
Inlet	ISO63	ISO100	ISO160	ISO160	ISO250
Outlet	ISO40	ISO63	ISO100	ISO100	ISO100

* *Chemical and ATEX compliant pumps only.*

© Edwards Limited 2007. All rights reserved.
Edwards and the Edwards logo are trademarks of Edwards Limited.

2.11 Materials of construction of components exposed to pumped gases

Table 17 - Materials of construction

Stator and headplates	Grey cast iron, grade 250 (BS1452)
Rotors	SG iron, grade 420/12 (BS2789)
Hydrokinetic drive/gearbox cover	Aluminium LM25TF (BS1490)
Housing 'O' rings	Viton
Hydrokinetic drive/gearbox shaft-seals	Viton
Internal pump shaft-seals	PTFE (polytetrafluoroethylene)
Hydrokinetic drive/gears cooling coils *	Copper/brass
After-cooler and swept volume †	Nickel plated copper/brass
Headplate jointing compound	Loctite 518

* *All EH1200, EH2600 and EH4200 models.*
† *All EH2600 and EH4200 models.*

2.12 Item Numbers

Table 18 - Item numbers

Pump(s)	Type*	220-240 V/380-415 V 3-phase, 50 Hz		208-230 V/460 V 3-phase, 60 Hz	
		Hydrocarbon	PFPE	Hydrocarbon	PFPE
EH250	SA	-	A301-53-935	-	A301-54-936
EH250IND	SA	A301-51-945	-	A301-52-946	-
EH500	SA	-	A302-73-935	-	A302-74-936
EH500IND	SA	A302-71-945	-	A302-72-946	-
EH1200	SA	-	A305-92-935	-	A305-93-936
EH1200IND	SA	A305-90-935	-	A305-91-936	-
EH1200C	FP	-	-	A305-56-982 †	-
EH1200 T3/T160/T4X	FP	A305-57-900	-	-	-
EH2600	SA	-	A307-53-935	-	A307-54-936
EH2600IND	SA	A307-75-946 ‡	-	A307-76-982 **	-
EH2600C	FP	-	-	A307-56-982 **	-
EH2600 T3X	FP	A307-41-935 ‡	-	-	-
EH2600 T160/T4X	FP	A307-79-900 ‡	-	-	-
EH4200	SA	-	-	-	-
EH4200IND	SA	A309-75-946 ‡	-	A309-76-982 **	-
EH4200C	FP	-	-	A309-56-982 **	-
EH4200 T3X	FP	A309-41-935 ‡	-	-	-
EH4200 T160/T4X	FP	A309-79-900 ‡	-	-	-

* *SA = Safe area, FP = Flameproof*
† *460 V only*
‡ *380-415 V only*
** *230/460 V only*

© Edwards Limited 2007. All rights reserved.
Edwards and the Edwards logo are trademarks of Edwards Limited.

Figure 3 - EH250/EH250IND dimensions (mm)*

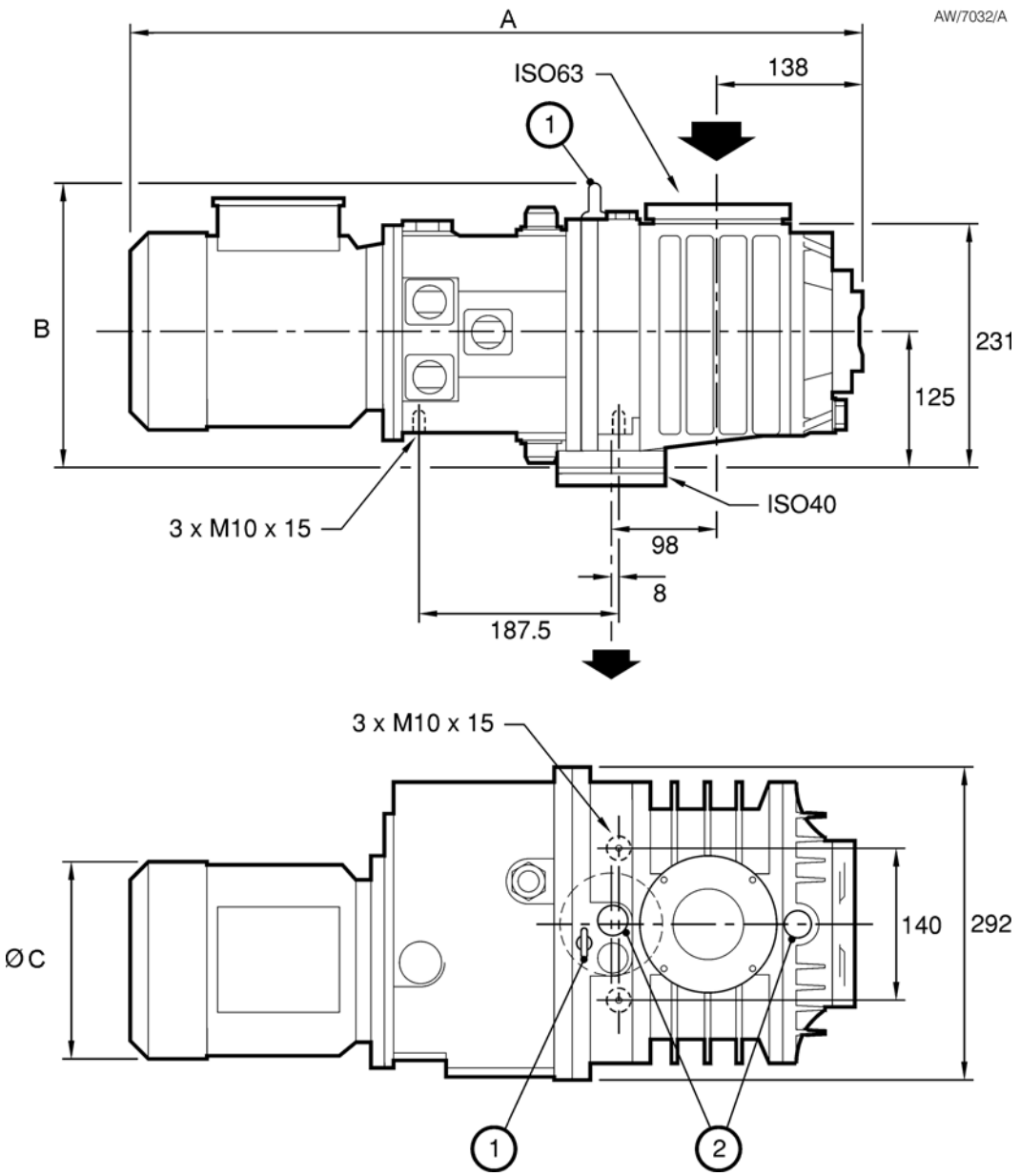

1. Lifting-bolt
2. External evacuation port

	EH250	EH250IND
A	682	709
B	270	270
C	183	190

* *The dimensions given in Figure 3 assume that Leroy is used for both the 1.5 and 2.2 KW motors.*

© Edwards Limited 2007. All rights reserved.
Edwards and the Edwards logo are trademarks of Edwards Limited.

Figure 4 - EH500/EH500IND dimensions (mm)*

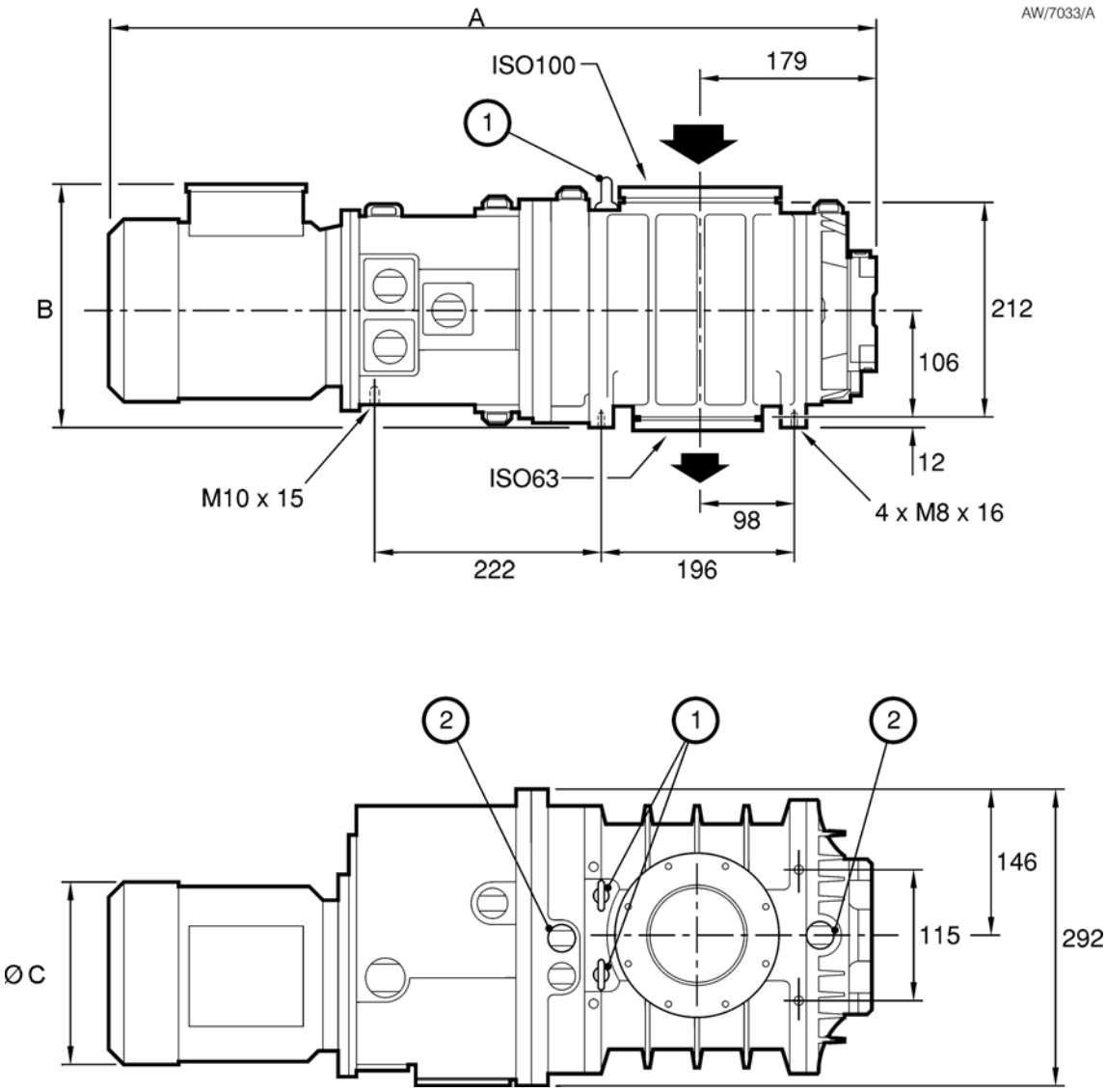

1. Lifting-bolts
2. External evacuation port

	EH500	EH500IND
A	770	797
B	234	252
C	183	190

* *The dimensions given in Figure 4 assume that Leroy is used for both the 1.5 and 2.2 KW motors.*

© Edwards Limited 2007. All rights reserved.
Edwards and the Edwards logo are trademarks of Edwards Limited.

Figure 5 - EH1200/EH1200IND dimensions (mm)

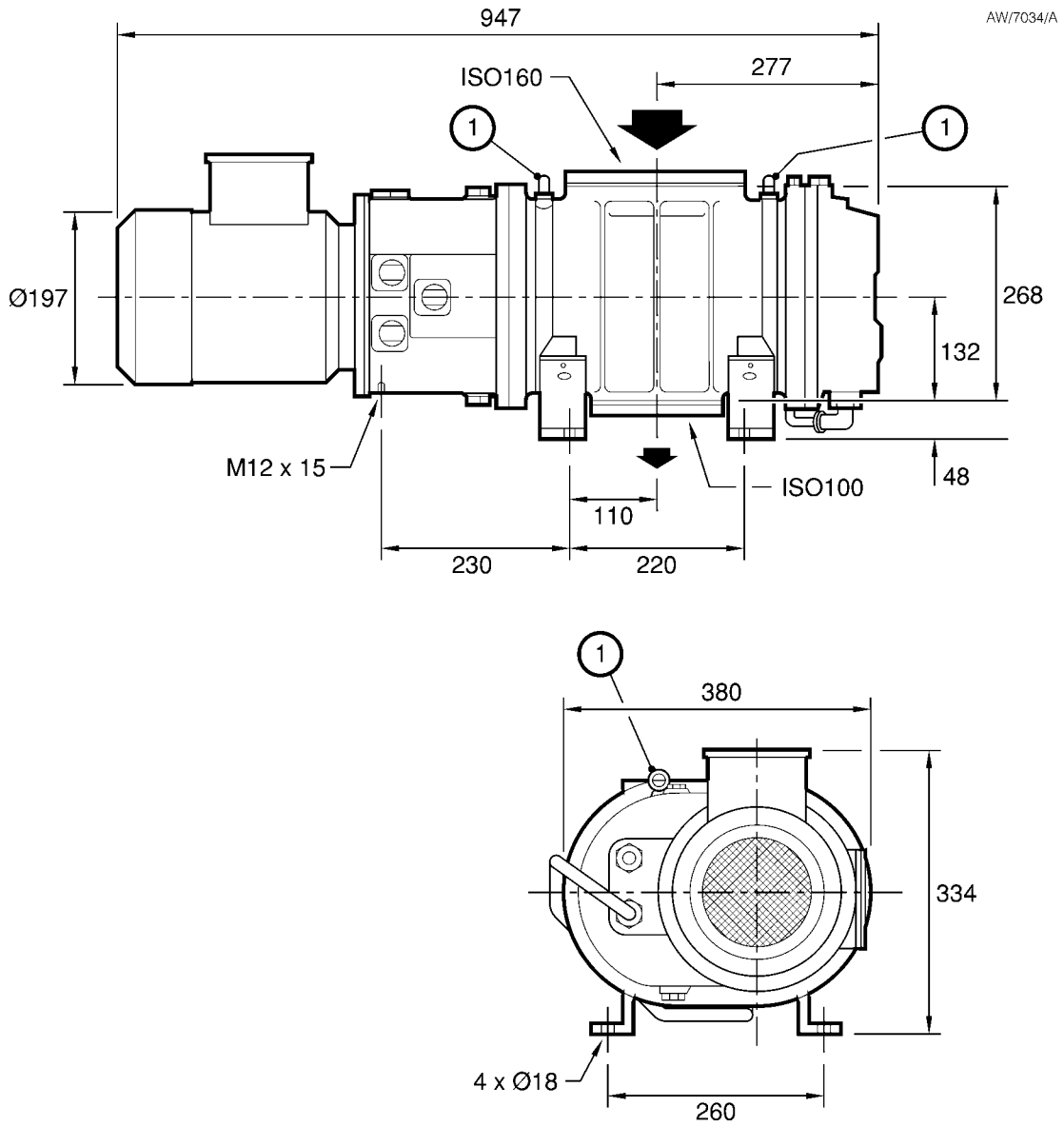

1. Lifting-bolts

© Edwards Limited 2007. All rights reserved.
Edwards and the Edwards logo are trademarks of Edwards Limited.

Figure 6 - EH1200C/EH1200 T3/T160/T4 dimensions (mm)

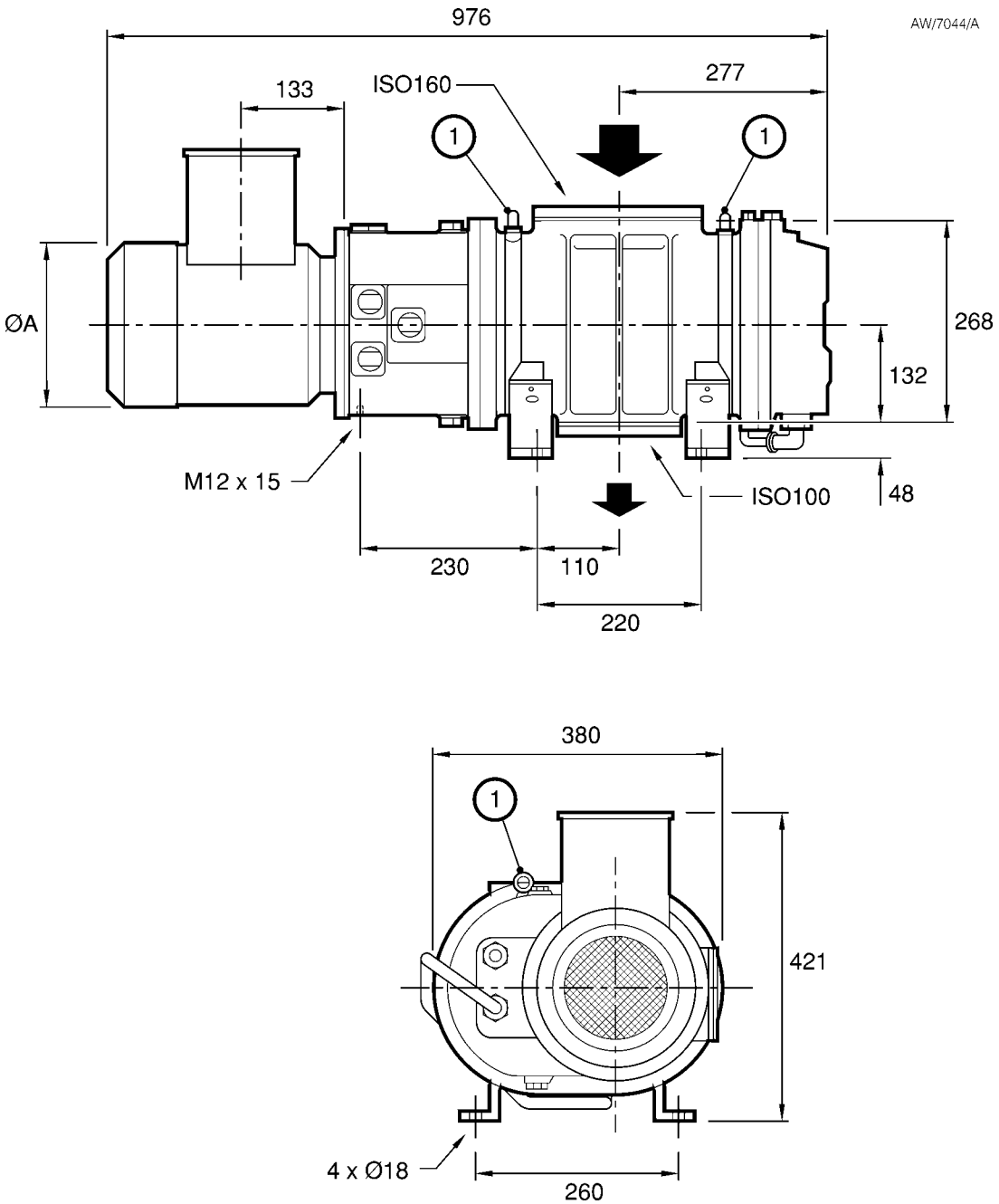

	A
EH1200C	250
EH1200 T3/T160/T4	208

1. Lifting-bolts

© Edwards Limited 2007. All rights reserved.
Edwards and the Edwards logo are trademarks of Edwards Limited.

Figure 7 - EH2600/EH2600IND dimensions (mm)

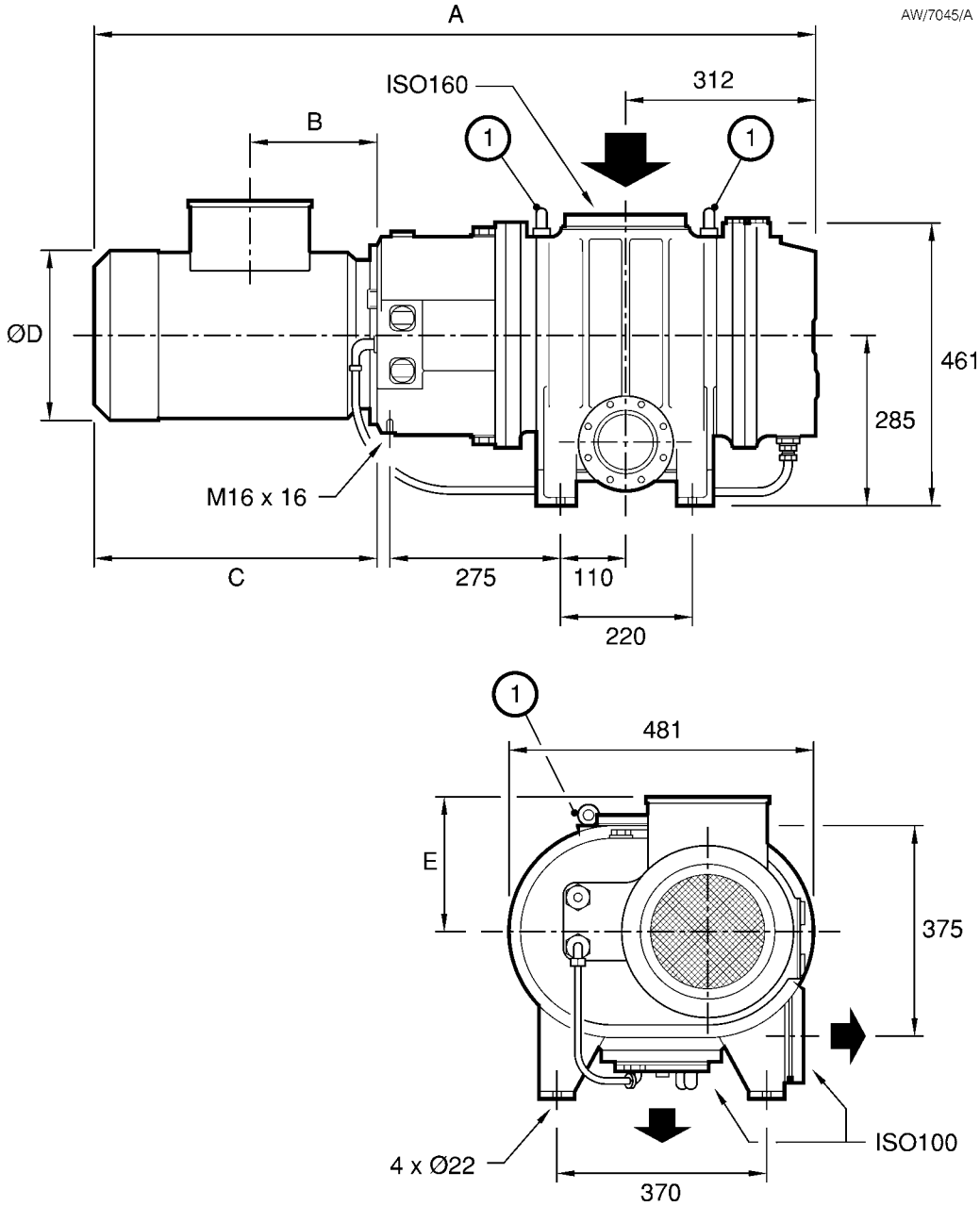

1. Lifting-bolts

	EH2600	EH2600IND
A	1200	1248
B	120	220
C	470	523
D	260	311
E	200	240

© Edwards Limited 2007. All rights reserved.
Edwards and the Edwards logo are trademarks of Edwards Limited.

Figure 8 - EH2600C/EH2600 T3/EH2600 T160/T4 dimensions (mm)

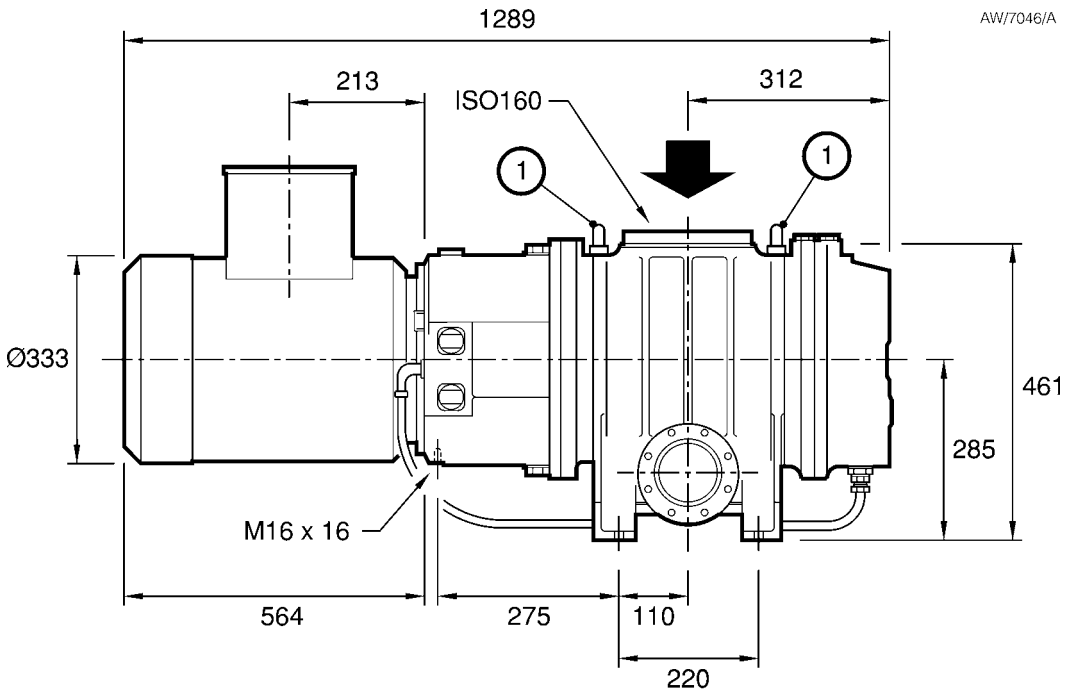

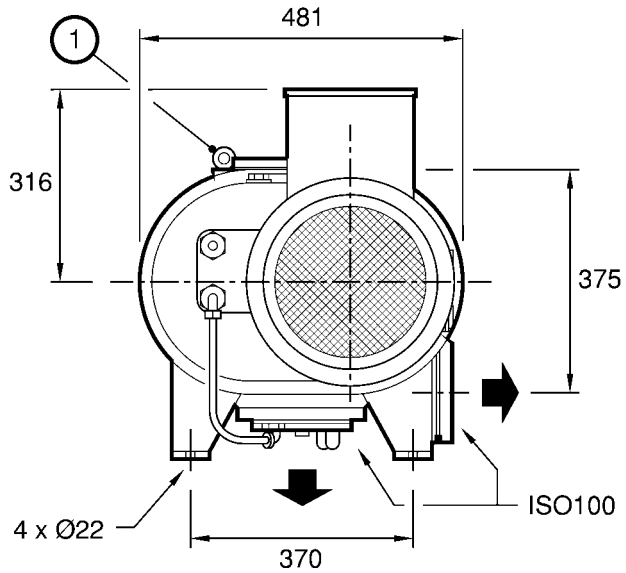

1. Lifting-bolts

© Edwards Limited 2007. All rights reserved.
Edwards and the Edwards logo are trademarks of Edwards Limited.

Figure 9 - EH4200/EH4200IND dimensions (mm)

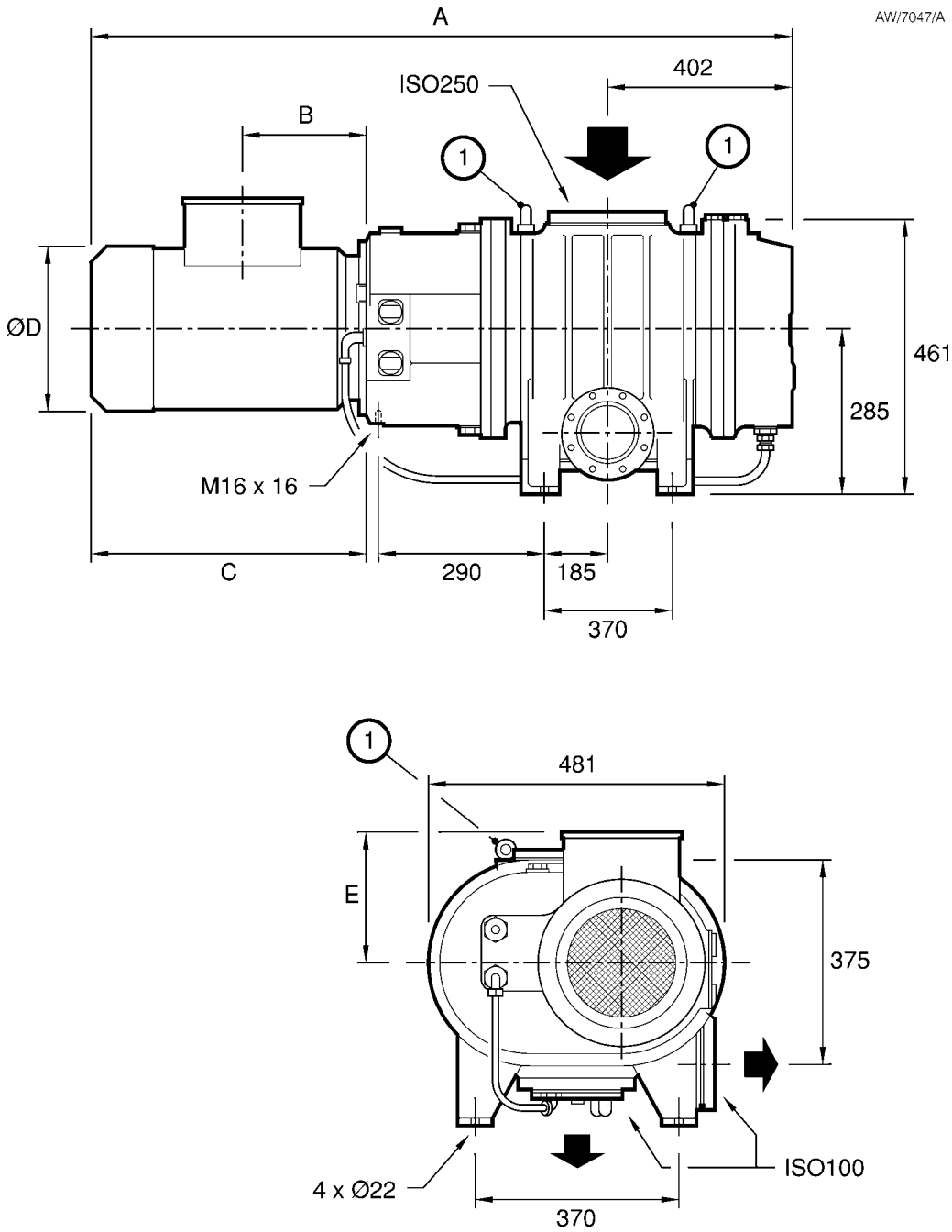

1. Lifting-bolts

	EH4200	EH4200IND
A	1380	1428
B	120	220
C	470	523
D	260	311
E	200	240

© Edwards Limited 2007. All rights reserved.
Edwards and the Edwards logo are trademarks of Edwards Limited.

Figure 10 - EH4200C/EH4200 T3/EH4200 T160/T4 dimensions (mm)

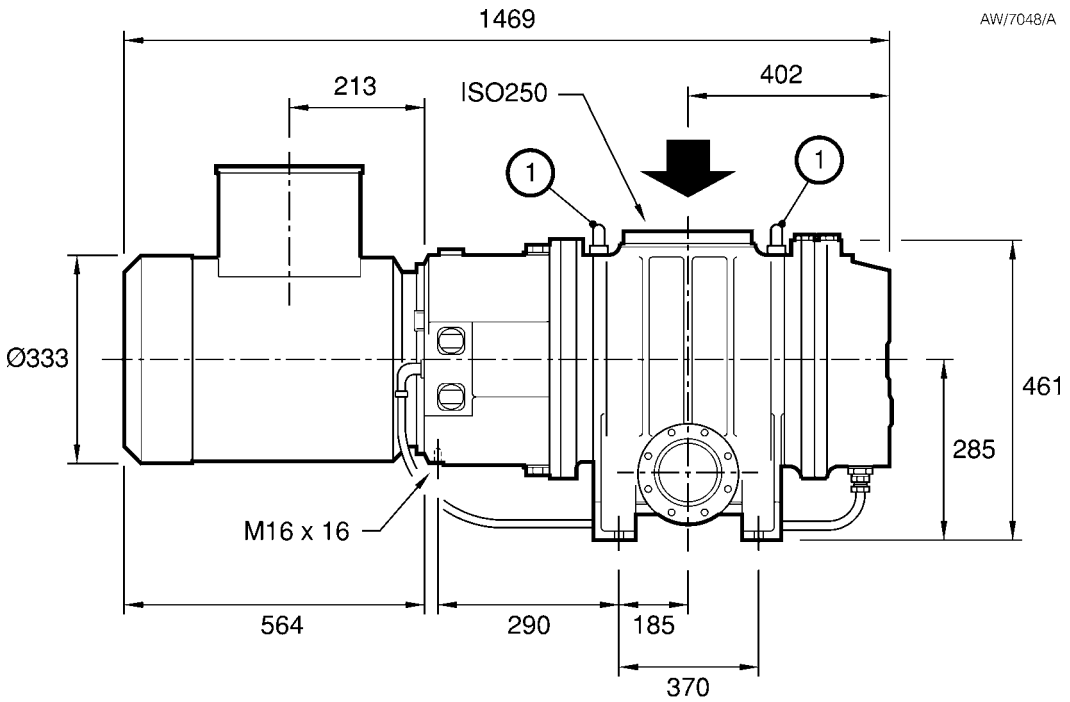

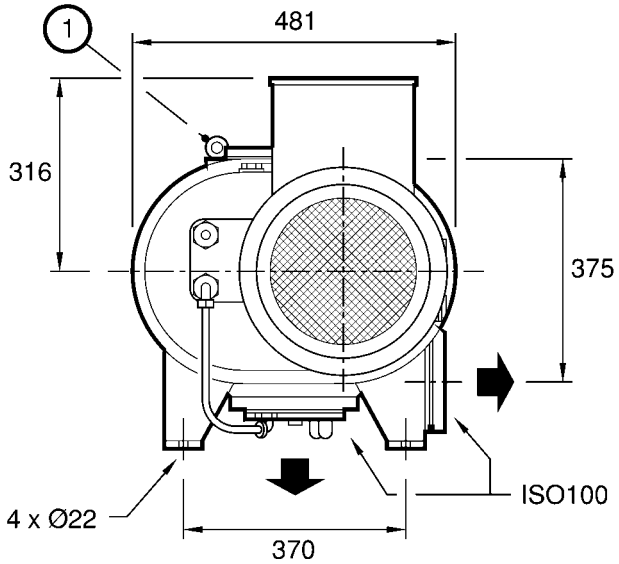

1. Lifting-bolts

© Edwards Limited 2007. All rights reserved.
Edwards and the Edwards logo are trademarks of Edwards Limited.

3 Installation

3.1 Safety

WARNING

Obey the safety instructions listed below and take note of appropriate precautions. If you do not, you can cause injury to people and damage to equipment.

- A suitably trained and supervised technician must install your EH pump.
- Ensure that the installation technician is familiar with the safety procedures which relate to the products pumped. Wear the appropriate safety-clothing when you come into contact with contaminated components. Dismantle and clean contaminated components inside a fume-cupboard.
- Consult Edwards publication P400-40-100 (Vacuum pump and vacuum system safety - chemical and industrial systems) before you install and use the EH pump to process hazardous or flammable materials.
- Vent and purge the pumping system before you start installation work.
- Check that all the required components are available and of the correct type before you start work.
- Ensure that debris does not get into the EH pump when you install it.
- Disconnect the other components in the pumping system from the electrical supply so that they cannot be operated accidentally.
- Do not reuse 'O' rings and Co-Seals.
- Ensure that the cooling-air flow through the pump-motor cooling-fan cannot be obstructed.
- Ensure that all electrical cables, nitrogen pipelines and cooling-water pipelines are safely positioned, secured and routed, so that they do not present a trip hazard.
- Provide adequate access to all pump servicing points and oil-level sight-glasses.
- Leak-test the system after installation work is complete and seal any leaks found to prevent leakage of hazardous substances out of the system and leakage of air into the system.

3.2 System requirements

Consider the following points when you design your pumping system:

- You must use a suitable backing pump: refer to Section 2.1 and 2.2.
- The EH pump must be mounted on a firm, level surface.
- Vacuum pipelines must be adequately supported to stop the transmission of stress to pipeline joints.
- If necessary, incorporate flexible pipelines in your system pipelines to reduce the transmission of vibration and to prevent loading of the coupling joints. If you use flexible pipelines, you must ensure that you use flexible pipelines which have a maximum pressure rating which is greater than the highest pressure that can be generated in your system.
- You must limit the temperature of the inlet gas to be no greater than the temperature classification of the system (if applicable).
- Ensure that your design incorporates all appropriate safety precautions if toxic, inflammable or explosive gases or particulates will be pumped.

© Edwards Limited 2007. All rights reserved.
Edwards and the Edwards logo are trademarks of Edwards Limited.

- You must be able to purge with an inert gas when you shut down the pumping system to dilute dangerous gases to safe concentrations. Consult Edwards or your supplier if you are in doubt.

If the EH pump is to be fitted in a new system, ensure that all preliminary pipelines have been installed and that a suitable base for the EH pump has been prepared before you start installation.

Check that the following services and facilities are available for connection to the EH pump:

- Cooling-water supply and return
- Hydrokinetic drive/gearbox purge nitrogen supply (chemical and ATEX compliant EH pumps only)
- Electrical supply
- Exhaust-extraction system
- Inlet-screen (if required, to prevent the ingress of debris during commissioning): refer to Section 1.3.6

3.3 Unpack and inspect

WARNING

Use suitable lifting equipment to move the EH pump, in accordance with the method described below. If you do not, you can injure yourself or damage the EH pump. Refer to Section 2.4 for the mass of the EH pump.

Use the following procedure to unpack and inspect the EH pump:

1. Place the pallet in a convenient position with a fork lift truck or a pallet truck.
2. Remove all packing materials.
3. Use suitable lifting-gear to remove the EH pump from its pallet:
   - On all pumps, attach the lifting-gear to the centre pair of lifting-bolts (Figure 1 to 10, item 1) on the EH pump.
   - All of the EH2600 model pumps and EH4200C, EH4200 T3X and EH4200 T160/T4X pumps have centres of mass which are offset towards the motor. On these pumps, you must fit an additional support strap to the motor (behind the lifting-bolt) to support the pump, and prevent it from tilting when you lift it.

   Do not try to lift the EH pump by hand (see Section 2.4 for the mass of your EH pump).
4. Remove all protective covers and inspect the EH pump. If the EH pump is damaged, notify your supplier and the carrier in writing within three days; state the Item Number of the EH pump together with your order number and your supplier's invoice number. Retain all packing materials for inspection. Do not use the EH pump if it is damaged.
5. If the EH pump is not to be used immediately, refit the protective covers. Store the EH pump in suitable conditions as described in Section 6.1.

© Edwards Limited 2007. All rights reserved.
Edwards and the Edwards logo are trademarks of Edwards Limited.

3.4 Fill the pump with oil

WARNING

Changing the oil in an EH pump from hydrocarbon to PFPE (Fomblin) could potentially cause a safety hazard. Fomblin EH pumps are generally used in hazardous applications which may involve the pumping of gases with high concentrations of oxygen. If hydrocarbon oil comes into contact with gases with an oxygen concentration greater than 25%, an explosion can occur.

Therefore, if you want to convert an EH pump that has been used with hydrocarbon oil to use PFPE (Fomblin) oil, you cannot simply flush the EH pump with new PFPE oil. You must return the EH pump to a Edwards Service Centre for overhaul and cleaning by qualified Edwards service engineers. The change in oil type requires a complete strip down of the EH pump, and thorough cleaning of all parts, so that all traces of hydrocarbon oil are removed.

WARNING

Ensure that the correct grade of oil is used and that the oil-levels in the EH pump are correct. If an incorrect oil is used or if an oil-level is incorrect, EH pump performance may be affected and the EH pump may be damaged, which will compromise its constructional safety.

3.4.1 Hydrokinetic drive/gearbox

We recommend that the hydrokinetic drive/gearbox oil-level is maintained at the recommended oil-level shown in Figure 11, item 5; if the oil-level is above or below the recommended oil-level, the performance of the EH pump may be affected.

Do not allow the oil-level to fall below the bottom of the reflector plate (Figure 11, item 4) or the EH pump may be damaged.

1. Remove the hydrokinetic drive/gearbox oil filler-plug (Figure 1, item 3).
2. Refer to Figure 11. Fill the hydrokinetic drive/gearbox with the recommended type of oil until the oil-level reaches the recommended oil-level (5) at the top of the reflector plate (4) in the oil-level sight-glass (3).
3. Refit the hydrokinetic drive/gearbox oil filler-plug.

3.4.2 Shaft-seal reservoir

WARNING

Ensure that the correct vented filler-plug is refitted in the shaft-seal reservoir. If you use a non-vented plug, the reservoir will be pressurised and the oil sight-glass may fracture.

We recommend that you fill the shaft-seal reservoir so that the oil-level is at the recommended oil-level, shown in Figure 11, item 2.

You can operate the EH pump as long as the oil-level is above the bottom of the reflector plate. Do not allow the shaft-seal oil-level to fall below the bottom of the reflector plate or the EH pump may be damaged. You must use the same oil you used to fill the hydrokinetic drive/gearbox.

1. Remove the shaft-seal reservoir vented oil filler-plug (Figure 1 and 2, item 2).
2. Refer to Figure 11. Fill the shaft-seal reservoir with oil until the oil-level is at the recommended oil-level (2) at the top of the reflector plate (6).
3. Refit the vented oil filler-plug.

© Edwards Limited 2007. All rights reserved.
Edwards and the Edwards logo are trademarks of Edwards Limited.

Figure 11 - Sight glasses

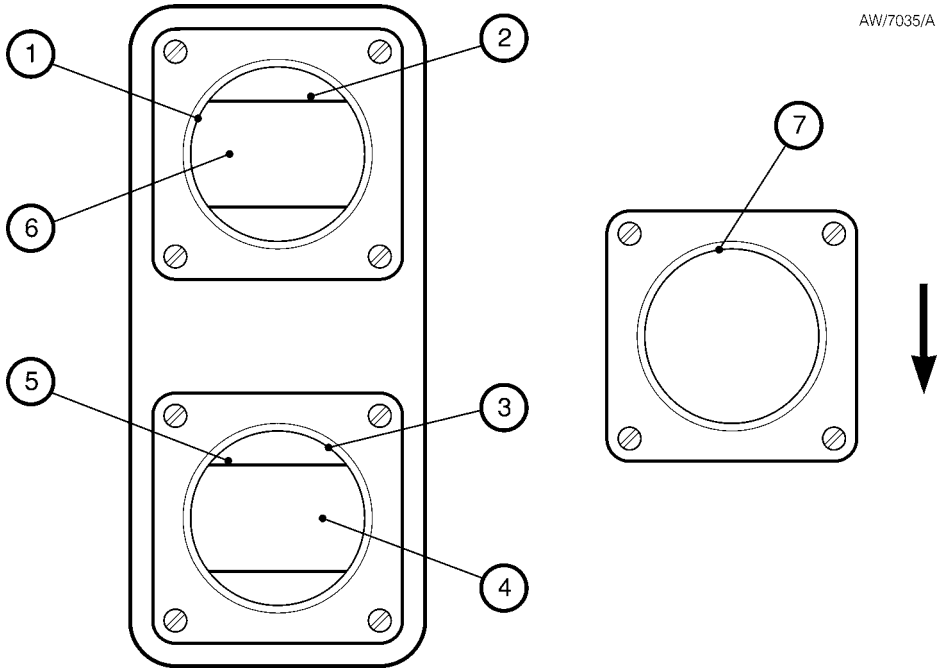

1. Shaft-seal reservoir sight-glass
2. Shaft seal reservoir recommended oil-level
3. Hydrokenetic drive/gearbox sight-glass
4. Hydrokenetic drive/gearbox reflector plate
5. Hydrokenetic drive/gearbox recommended oil-level
6. Shaft-seal reflector plate
7. Direction of rotation sight-glass* (the arrow shows the correct direction)

* *Not fitted to EH2600/2600IND/2600C/2600 T3/2600 T160 and EH4200/4200IND/4200C/4200 T3/4200 T160 pumps*

3.4.3 Gear-cover (all EH1200, EH2600 and EH4200 model pumps only)

Use the following procedure to fill the gear-cover on all EH1200, EH2600 and EH4200 pumps.

You must fill the gear-cover with the same oil you used to fill the hydrokinetic drive/gearbox and shaft-seal reservoir.

1. Remove the oil filler-plug on the top of the gear-cover (Figure 2, item 7).
2. Fill the gear-cover with oil until the oil-level is at the middle of the reflector plate in the gear-cover oil-level sight-glass (Figure 2, item 9).
3. Refit the oil filler-plug.

© Edwards Limited 2007. All rights reserved.
Edwards and the Edwards logo are trademarks of Edwards Limited.

3.5 Cooling-water connections (all EH1200, EH2600 and EH4200 model pumps only)

Note: *Refer to Section 2.8 for the cooling-water requirements. Note that there are minimum flow rate and flow-switch requirements specified for ATEX compliant EH pumps operated in ATEX certified systems.*

Connect the cooling-water supply and return lines to the $^{3}/_{8}$ inch BSP connectors. One connector is on the rear of the hydrokinetic drive/gearbox, the other connector is on the underside of the gear-cover. You can connect the supply and return lines to either of the connectors; the direction of cooling-water flow is not important.

Refer to Section 2.8 for the minimum cooling-water flow rate required. If the danger of the condensation of gases in the booster is not process critical, always connect the supply line to the gearbox cover first.

3.6 Electrical connections

WARNING

Ensure that the electrical installation of the EH pump conforms with your local and national safety requirements. It must be connected to a suitably rated (refer to Section 2.5) fused and protected electrical supply and a suitable earth (ground) point.

WARNING

If a chemical or ATEX compliant EH pump is used in a potentially explosive atmosphere or is used to pump a potentially explosive atmosphere, the pump must be powered by an electrical supply at the rated frequency of the pump motor. If it is not, you may invalidate any ATEX certification of the pump, and the motor may overheat which could create an ignition hazard.

If you want to use a variable speed drive to operate the pump motor, contact Edwards for advice.

3.6.1 Electrical supply configuration

The motors of the EH250, EH500 and EH500IND pumps are supplied configured for ‘low-voltage’ operation (240 V and lower).

The motors of all other EH pumps are supplied configured for ‘high-voltage’ operation (380 V and higher). The one exception to this is the Leroy 11 kW, 50 Hz motor, which is configured for ‘low voltage’ as this is 380-415 V.

Refer to the wiring instructions provided with the pump motor. Configure your electrical connections according to the manufacturers instructions. If in doubt refer to Table 20.

Refer to Table 20 before you connect the electrical supply to the pump motor (as described in Section 3.6.2). Table 20 defines which figure you must refer to for the electrical connections for your pump/electrical supply.

© Edwards Limited 2007. All rights reserved.
Edwards and the Edwards logo are trademarks of Edwards Limited.

3.6.2 Motor connections

WARNING

On all chemical and ATEX compliant EH pumps, you must use a suitable flameproof cable-gland to connect the electrical supply cable to the pump-motor terminal-box. If you do not, the installation may invalidate the certification of the system if the pump is used in an ATEX system.

WARNING

You must provide suitable strain relief on the electrical supply cable. If you do not, the cable (or wires in the cable) may become disconnected from the pump and there may a risk of injury or death by electric shock.

WARNING

Connect the electrical supply to the motor through a contactor which has a manual reset control.

WARNING

Connect the electrical supply to the motor so that it is automatically switched off if the backing pump stops. If you do not, the EH pump may overheat if it continues to operate when the backing pump is stopped.

WARNING

You must be able to isolate and lock out the electrical supply from the EH pump.

CAUTION

The motor must be correctly configured and you must make the correct electrical connections for your electrical supply. If you do not, you can damage the motor.

Connect the supply through a contactor which has overload-protection or use a controller which incorporates a contactor.

You must use a contactor which has a manual reset control. If you do not, the EH pump could automatically restart after an electrical overload or an electrical supply failure.

You must use a suitable multi-wire cable and a suitable cable-gland (see Step 4 below) to connect your electrical supply to the pump motor.

Connect the motor to the electrical supply as described in the following procedure.

1. Remove the motor terminal-box cover (Figure 1 and 2, item 1).
2. Check your electrical supply voltage and frequency. If necessary, configure the motor (that is, the terminal wires and any links) to operate with your supply voltage: refer to the wiring instructions supplied with the pump motor, or if in doubt the appropriate Figure specified in Table 20.
3. Remove the plug from the cable-entry hole that you will use for the electrical supply cable. Choose the most suitable hole for your application.
4. Fit a suitable cable-gland to the cable-entry hole. The cable-gland (and adaptor, if fitted) must provide a protective seal to IP44 (or higher), as defined by IEC 529. Refer to Table 19 for the cable-gland hole sizes.
5. Pass the electrical supply cable through the cable-gland.

© Edwards Limited 2007. All rights reserved.
Edwards and the Edwards logo are trademarks of Edwards Limited.

6. Connect the wires of the cable to the appropriate terminals, as shown in the wiring instructions supplied with the pump motor, or if in doubt the appropriate Figure specified in Table 20.
7. Tighten the cable-gland.
8. If you have a chemical or ATEX compliant EH pump, continue at Section 3.6.3 to connect the motor thermistors, otherwise refit the terminal-box cover to the motor.

Table 19 - Motor cable-gland hole sizes

Pump type	Motor frame size *	Electrical supply cable-gland hole size (ISO)	Thermistors cable-gland hole size (ISO)
Safe area EH pumps	90, 100	20	-
	132	25	-
	160	32	-
Chemical EH pumps and ATEX compliant	100	20	20
	160	32	20

* *As shown on the motor label.*

3.6.3 Connect the motor thermistors (chemical and ATEX compliant EH pumps only)

The flameproof motors on all chemical and ATEX compliant EH pumps incorporate thermistors.

You must connect the thermistor terminals in the motor to a suitable control circuit, to shut down the EH pump system if the motor temperature is too high. An example control circuit is shown in Figure 12.

You must use a suitable two-wire cable and a suitable cable-gland (see Step 2) to connect the thermistors cable (from your control circuit) to the thermistor terminals in the motor.

Use the following procedure to connect the thermistor terminals to the control circuit.

1. Remove the plug from the cable-entry hole that you will use for the thermistors cable. (If there is more than one cable-entry hole, choose the most suitable hole for your application.)
2. Fit a suitable cable-gland to the cable-entry hole. The cable-gland (and adaptor, if fitted) must provide a protective seal to IP44 (or higher), as defined by IEC 529. Refer to Table 19 for the cable-gland hole sizes.
3. Pass the thermistors cable through the cable-gland.
4. Connect the two wires of the cable to the appropriate terminals, as shown in Figure 13 to 21 (refer to Table 20).
5. Tighten the cable-gland.
6. Refit the terminal-box cover to the motor.
7. Connect the thermistor wires to your control circuit.

© Edwards Limited 2007. All rights reserved.
Edwards and the Edwards logo are trademarks of Edwards Limited.

Figure 12 - Example control circuit

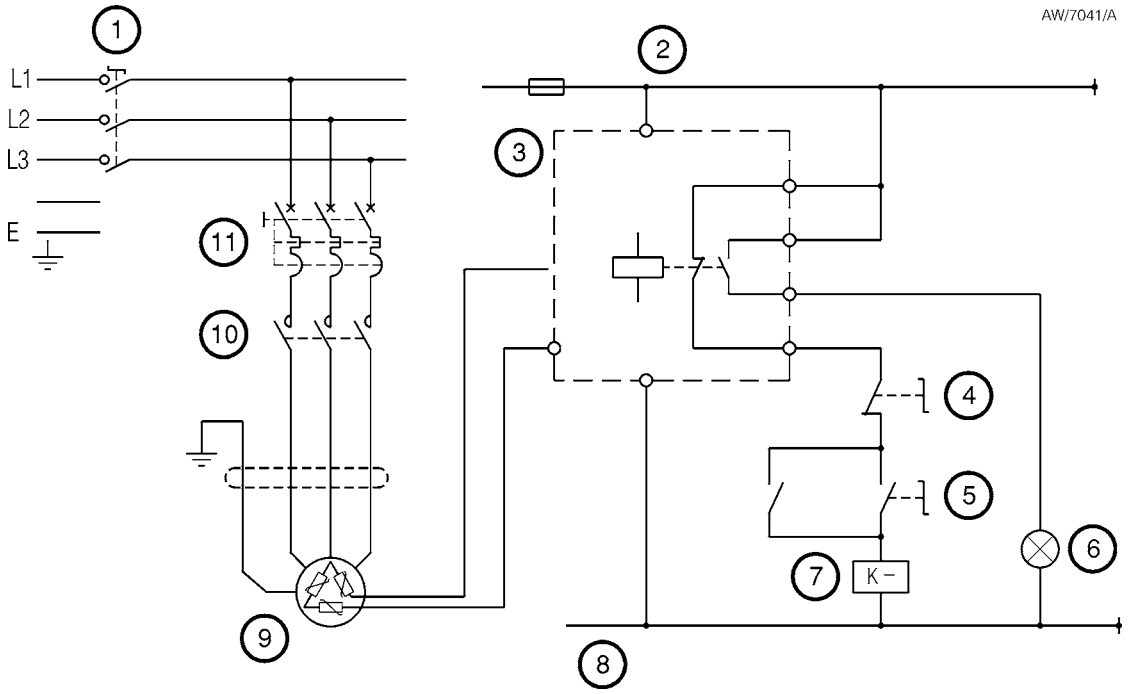

1. Electrical supply isolator
2. +ve control side
3. Thermistor relay
4. Stop switch
5. Start switch
6. Fault indicator lamp
7. Pump contactor
8. 0 V control side
9. Pump motor
10. Contactor
11. Circuit breaker

© Edwards Limited 2007. All rights reserved.
Edwards and the Edwards logo are trademarks of Edwards Limited.

Table 20 - Electrical supply connection configurations

Motor supplier	Motor Item Number	Motor voltage (V) (connection)	Motor power *	Frequency (Hz)	Configuration	Refer to Figure
Leroy	A071-12-004	460	1.5 kW	60	A	13
	A071-13-076		2.2 kW			
	A071-12-004	208-230	1.5 kW	60	B	14
	A071-13-076		2.2 kW			
Brook	A071-12-003	380-415	1.5 kW	50	C	15
	A071-14-001		3 kW			
	A071-12-024		1.5 kW			
	A071-14-020		3 kW			
Leroy	A071-13-075		2.2 kW			
	A071-14-006		3 kW			
Brook	A071-12-003	220-240	1.5 kW	50	D	16
	A071-14-001		3 kW			
	A071-12-024		1.5 kW			
	A071-14-020		3 kW			
Leroy	A071-13-075		2.2 kW			
	A071-14-006		3 kW			
WEG	A071-18-017	380-415 (delta)	11 kW	50	D	16
Leroy	A071-18-015	380-415 (delta)	11 kW	50	D	16
Brook	A071-18-021	380-415 (direct delta start)	11 kW	50	D	16
	A071-18-015		11 kW			
	A071-12-004	460 (star)	1.5 kW	60	E	17
	A071-12-025		1.5 kW			
	A071-12-004	208-230 (double star)	1.5 kW	60	F	18
	A071-12-025		1.5 kW			
	A071-14-012	460	4 h.p.	60	G	19
WEG	A071-18-019	460 (delta)	11 kW	60	E	17
	A071-18-019	230 (double delta)	11 kW	60	H	20
Brook	A071-14-002	460 (delta)	4 h.p.	60	E	17
	A071-14-021		4 h.p.			
	A071-18-016		15 h.p.			
	A071-18-022		15 h.p.			
	A071-17-002		10 h.p.			
	A071-17-029		10 h.p.			
	A071-14-002	208-230 (double delta)	4 h.p.	60	I	21
	A071-14-021		4 h.p.			
	A071-17-002		10 h.p.			
	A071-17-029		10 h.p.			
	A071-18-016	230 (double delta)	15 h.p.	60	I	21
	A071-18-022		15 h.p.			

* *As shown on the label on the motor.*

© Edwards Limited 2007. All rights reserved.
Edwards and the Edwards logo are trademarks of Edwards Limited.

Figure 13 - Electrical supply configuration A

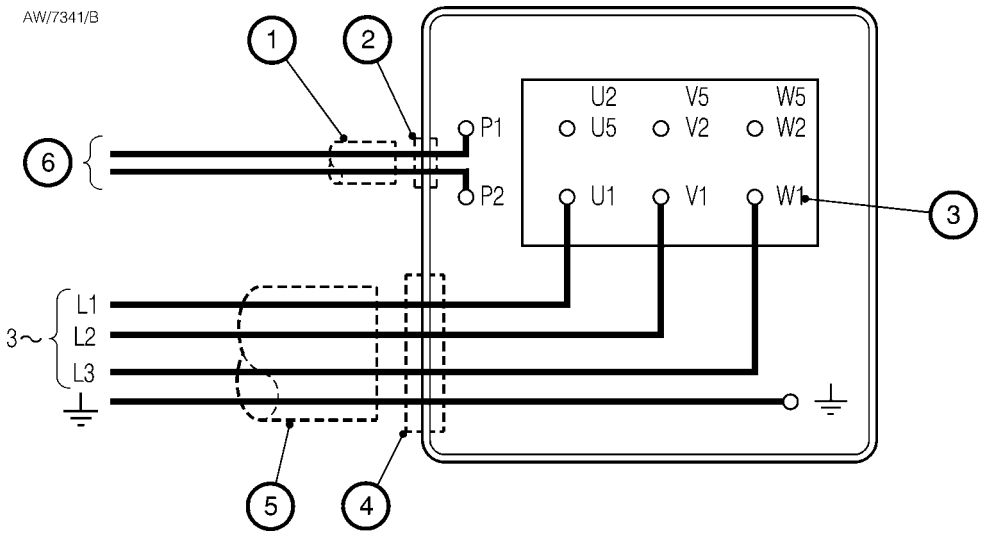

1. Thermistors cable
2. Cable-gland
3. Terminal/wire markings
4. Cable-gland
5. Electrical supply cable
6. To control circuit

Note: *The thermistor terminals may be annotated "T1" and "T2" instead of "P1" and "P2".*

Figure 14 - Electrical supply configuration B

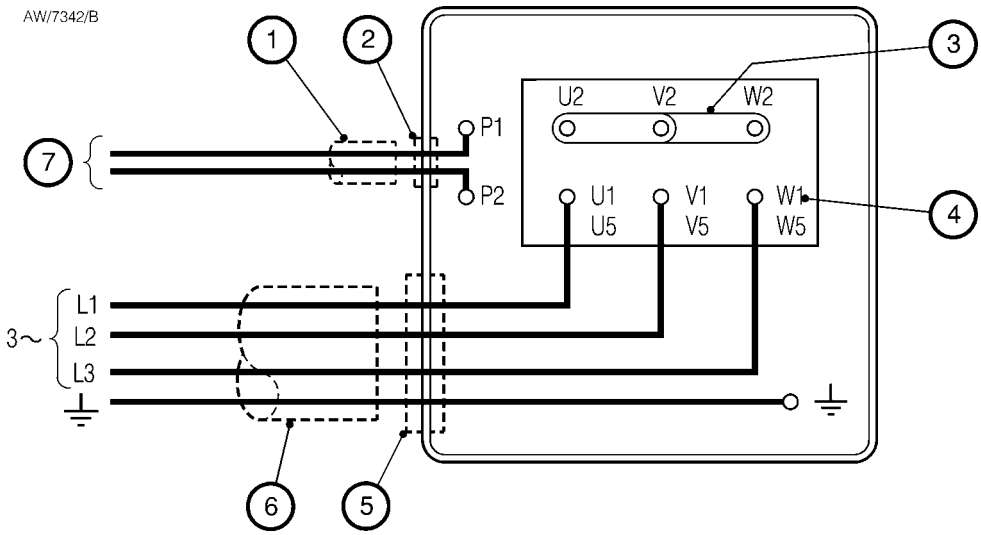

1. Thermistors cable
2. Cable-gland
3. Links
4. Terminal/wire markings
5. Cable-gland
6. Electrical supply cable
7. To control circuit

Note: *The thermistor terminals may be annotated "T1" and "T2" instead of "P1" and "P2".*

© Edwards Limited 2007. All rights reserved.
Edwards and the Edwards logo are trademarks of Edwards Limited.

Figure 15 - Electrical supply configuration C

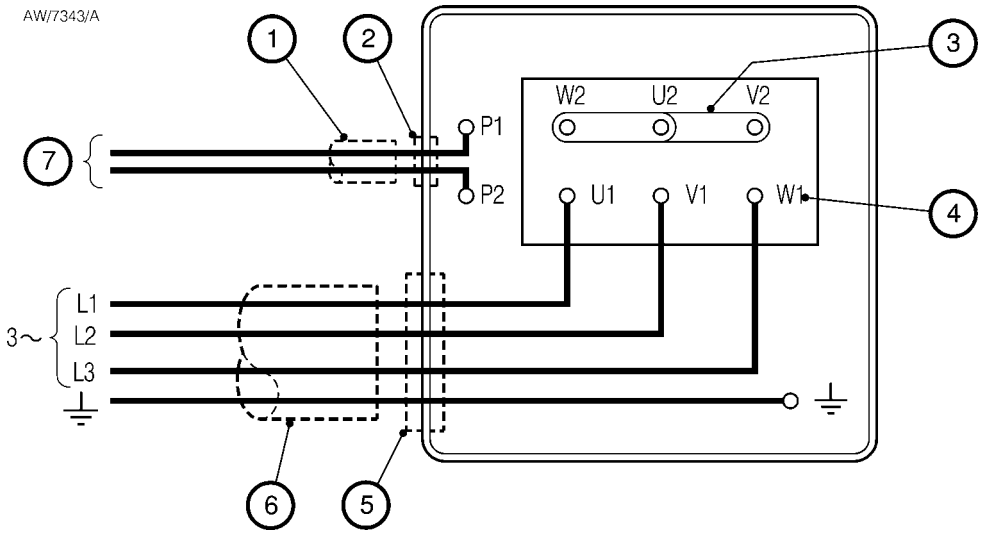

1. Thermistors cable
2. Cable-gland
3. Links
4. Terminal/wire markings
5. Cable-gland
6. Electrical supply cable
7. To control circuit

Note: *The thermistor terminals may be annotated "T1" and "T2" instead of "P1" and "P2".*

Figure 16 - Electrical supply configuration D

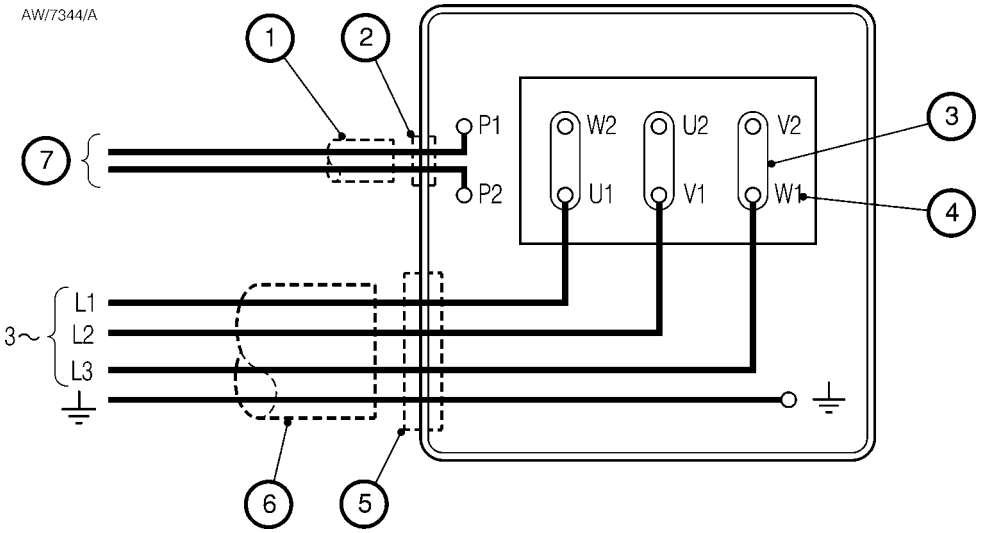

1. Thermistors cable
2. Cable-gland
3. Links
4. Terminal/wire markings
5. Cable-gland
6. Electrical supply cable
7. To control circuit

Note: *The thermistor terminals may be annotated "T1" and "T2" instead of "P1" and "P2".*

© Edwards Limited 2007. All rights reserved.
Edwards and the Edwards logo are trademarks of Edwards Limited.

Figure 17 - Electrical supply configuration E

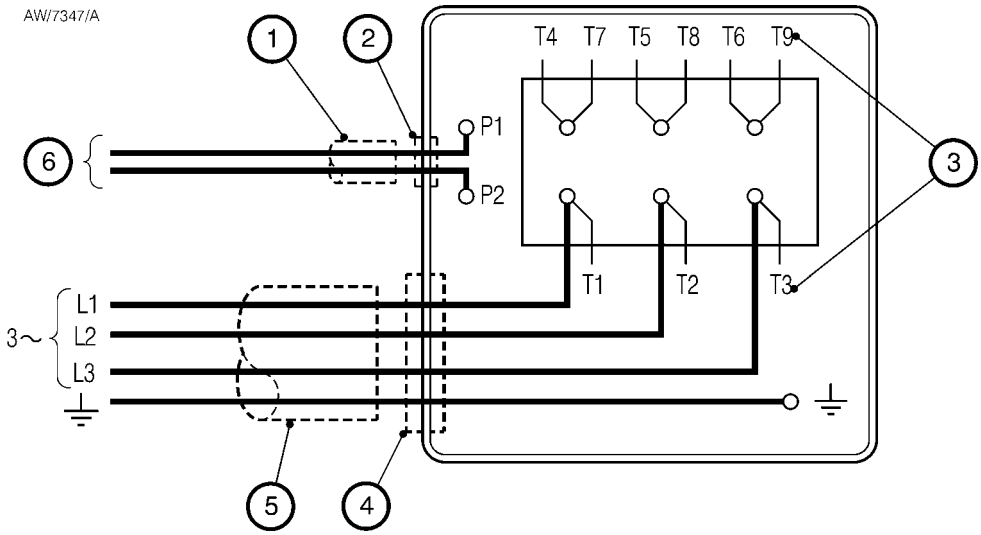

1. Thermistors cable
2. Cable-gland
3. Terminal/wire markings
4. Cable-gland
5. Electrical supply cable
6. To control circuit

Note: *The thermistor terminals may be annotated "T1" and "T2" instead of "P1" and "P2". Winding wires may be numbered without letters.*

Figure 18 - Electrical supply configuration F

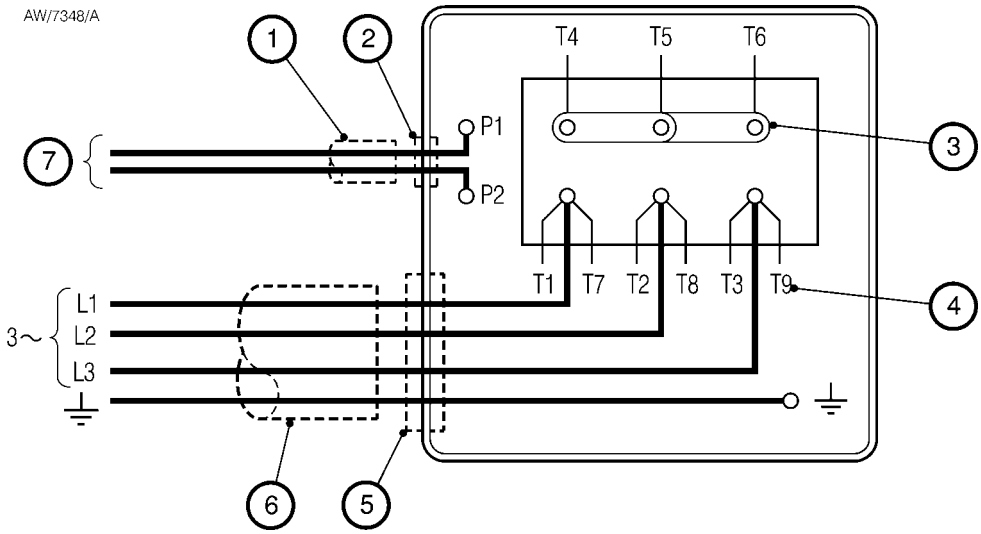

1. Thermistors cable
2. Cable-gland
3. Links
4. Terminal/wire markings
5. Cable-gland
6. Electrical supply cable
7. To control circuit

Note: *The thermistor terminals may be annotated "T1" and "T2" instead of "P1" and "P2". Winding wires may be numbered without letters.*

© Edwards Limited 2007. All rights reserved.
Edwards and the Edwards logo are trademarks of Edwards Limited.

Figure 19 - Electrical supply configuration G

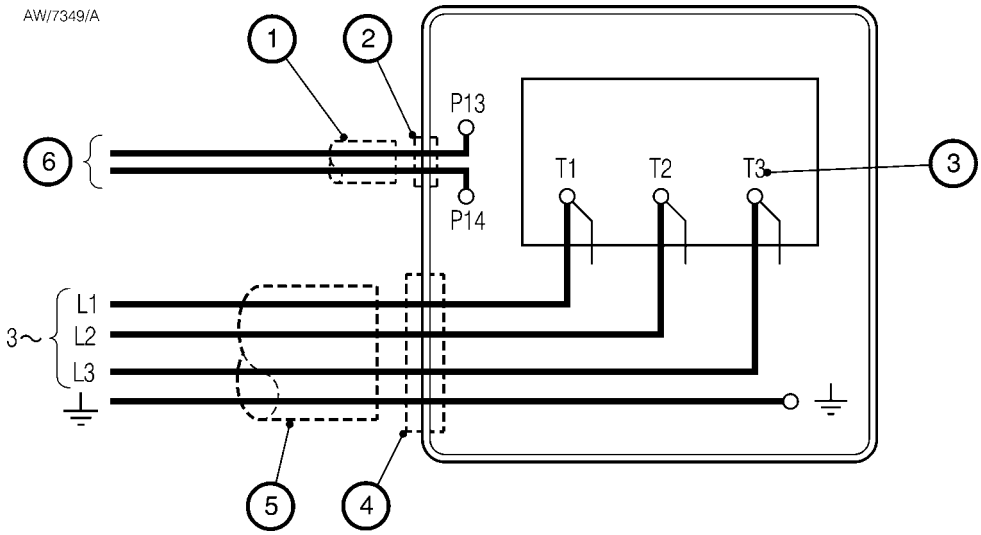

1. Thermistors cable
2. Cable-gland
3. Terminal/wire markings
4. Cable-gland
5. Electrical supply cable
6. To control circuit

Figure 20 - Electrical supply configuration H

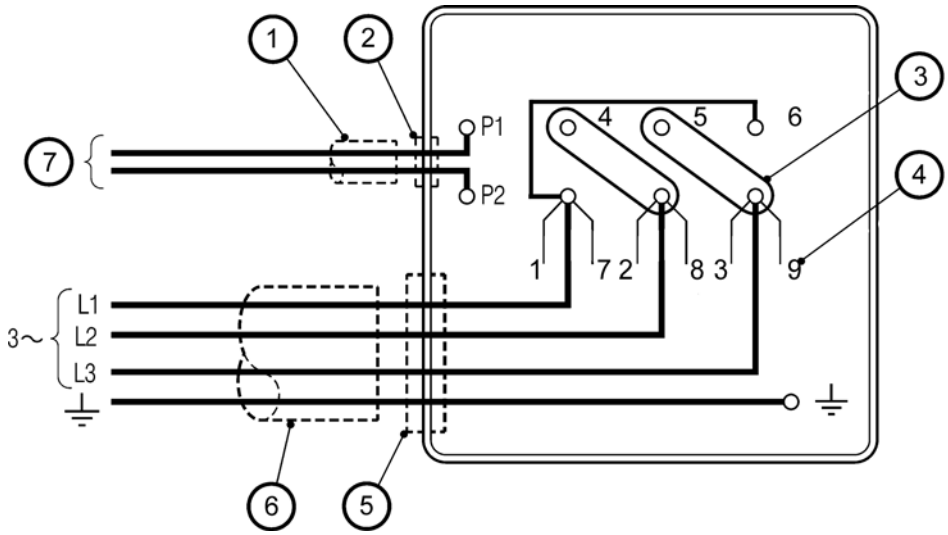

1. Thermistors cable
2. Cable-gland
3. Links
4. Terminal/wire markings
5. Cable-gland
6. Electrical supply cable
7. To control circuit

Note: *The thermistor terminals may be annotated "T1" and "T2" instead of "P1" and "P2".*

© Edwards Limited 2007. All rights reserved.
Edwards and the Edwards logo are trademarks of Edwards Limited.

Figure 21 - Electrical supply configuration I

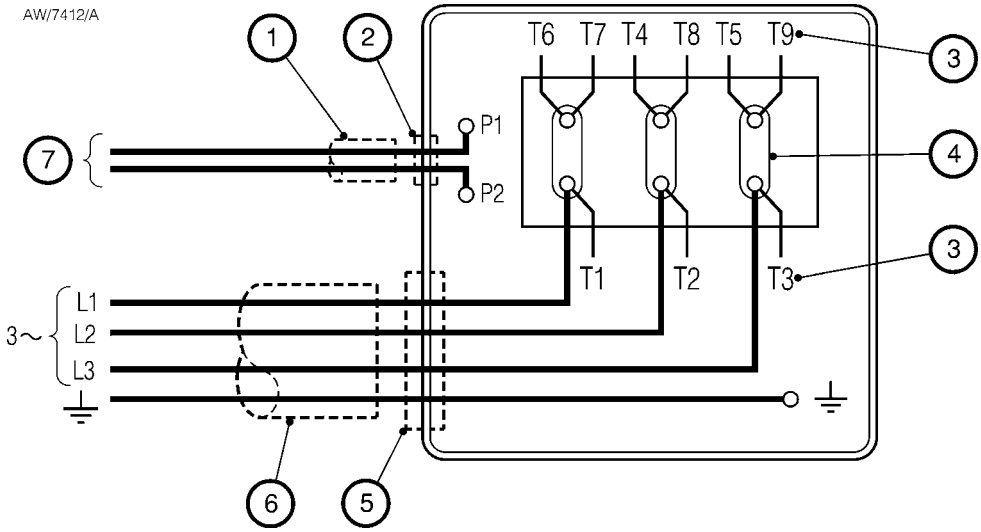

1. Thermistors cable
2. Cable-gland
3. Links
4. Terminal/wire markings
5. Cable-gland
6. Electrical supply cable
7. To control circuit

Note: *The thermistor terminals may be annotated "T1" and "T2" instead of "P1" and "P2".*

3.7 Check the direction of pump rotation

WARNING

Blank the inlet or connect the EH pump to the vacuum system before you check the direction of pump rotation. If you do not, there is danger of objects being trapped in the rotating rotors.

It is possible for the three-phase electrical supply to the motor to be phased incorrectly. If the supply is phased incorrectly, the rotors will rotate in the reverse direction or remain stationary. Check the direction of rotation as described below.

1. Check that the EH pump is connected to the vacuum system or that the inlet is blanked off.
2. Connect the backing pump and switch the backing pump on.
3. On all of the EH2600 and EH4200 model pumps, the correct direction of rotation is indicated by an arrow on the motor fan cover (Figure 2, item 17). To determine the direction of rotation: watch the motor fan inside the fan cover, switch on the EH pump for two or three seconds, then switch the EH pump off.

   On all of the EH250, EH500 and EH1200 model pumps, you can use the method above to determine the direction of rotation. Alternatively, the direction of rotation is also indicated by an arrow next to the direction of rotation sight-glass (Figure 1, item 10 and Figure 2, item 14): watch the motor-coupling in the sight-glass (Figure 11, item 7), switch on the EH pump for two or three seconds, then switch the EH pump off.
4. Check that the direction of rotation of the coupling noted in Step 3 was the same as that indicated by the rotation arrow on the motor or on the direction of rotation sight-glass. If the direction of rotation was correct, continue at Section 3.8.

© Edwards Limited 2007. All rights reserved.
Edwards and the Edwards logo are trademarks of Edwards Limited.

5. If the direction of rotation of the coupling was incorrect:
   - Switch off the backing pump and vent the system; isolate the EH pump from the electrical supply; reverse any two of the phase-wires in the motor terminal-box.
   - Repeat the check from Step 2 to ensure that the direction of rotation is now correct.

3.8 Connect the hydrokinetic drive/gearbox purge nitrogen supply (chemical and ATEX compliant EH pumps only)

WARNING

Your nitrogen supply pressure must comply with the requirements of Section 2.7. If it does not, the purge pipelines may become over-pressurised and may explode.

WARNING

If your system incorporates an isolation valve between the chemical EH pump and your backing pump, ensure that the purge nitrogen supply is switched off when the isolation valve is closed.

WARNING

If your booster pump is part of an ATEX system you have to connect the gearbox purge and guarantee the Nitrogen supply.

Use a rigid metal (such as stainless steel) pipeline with an outside diameter of $^{1}/_{4}$ inch for your nitrogen supply.

We recommend that you install an automatically operated isolation-valve in your nitrogen supply pipeline, configured so that:

- The hydrokinetic drive/gearbox purge nitrogen supply is on whenever the chemical or ATEX compliant EH pump is on.
- The hydrokinetic drive/gearbox purge nitrogen supply is off whenever the chemical or ATEX compliant EH pump is off.

If your system incorporates an isolation valve between the chemical or ATEX compliant EH pump and the backing pump, you **must** configure your system so that the purge nitrogen supply is switched off whenever the isolation valve is closed. If you do not, and the purge supply is left on when the isolation valve is closed, the system upstream of the isolation valve will become pressurised.

Refer to Figure 2 and use the following procedure to connect your purge nitrogen supply:

1. Remove the $^{1}/_{4}$ inch blanking plug from the hydrokinetic drive/gearbox oil filler-plug and purge connector (Figure 2 item 4).
2. Fit a suitable $^{1}/_{4}$ inch compression fitting connector to the purge connector.
3. Fit your nitrogen supply pipeline into the compression fitting and tighten to secure the connection.

© Edwards Limited 2007. All rights reserved.
Edwards and the Edwards logo are trademarks of Edwards Limited.

3.9 Connect the pump-inlet and outlet

WARNING

Do not exceed the load limits on the pump-inlet and outlet flanges as specified in Figure 22. If you do, there will be a risk of leakage of process gases from the EH pump, or of damage to the EH pump.

WARNING

The ATEX compliant EH pumps rely on constructional safety for safe operation. If you will use the ATEX compliant EH pump in a process in which dust or particles could enter and damage the ATEX compliant EH pump, you must fit a suitable inlet filter.

WARNING

If particles, debris or loose components could enter the EH pump during commissioning, you must fit a suitable inlet filter which you can remove before operating the EH pump on process duties.

WARNING

If you fit an isolation valve between a chemical or ATEX compliant EH pump and the backing pump, you must interlock the operation of the valve with the operation of the chemical or ATEX compliant EH pump, so that closure of the valve results in shut-down of the chemical or ATEX compliant EH pump.

WARNING

If you will pump flammable gases, ensure that your backing pump and exhaust-extraction/ abatement systems comply with the critical backing pressure requirements of Section 2.2. If you do not, there will be a risk of explosion during operation.

You must connect the inlet of the EH pump to your vacuum system, and connect the outlet of the EH pump to your backing pump and exhaust-extraction/abatement systems, as required.

Pump-inlet and outlet connections are made with standard ISO flanges, Edwards trapped 'O' rings and (on the EH250 pumps only) a Edwards Co-Seal.

All of the EH2600 and EH4200 model pumps have two alternative outlet positions: on the underside of the EH pump, and at the side of the EH pump.

As supplied, these EH pumps are configured to use the outlet at the side of the EH pump and the flange on the underside of the EH pump is blanked off. If you do not wish to use the side outlet, remove the blanking-plate and 'O' ring from the outlet on the underside of the EH pump and refit the blanking-plate with a new 'O' ring over the side outlet-flange.

Take note of the following when you connect your EH pump to the vacuum system.

- Move the EH pump to the required location and ensure that it is level and secure.
- For optimum pumping speeds, ensure that the pipeline connected to the pump-inlet is as short as possible and has a bore size not less than the inlet port diameter.
- Use a flexible connection in the pipeline from the vacuum system to the EH pump to reduce vibration and stress in the system pipelines (see Section 3.2).
- On very dusty applications, use a low-impedance inlet-filter to minimise abrasion in the EH pump.

© Edwards Limited 2007. All rights reserved.
Edwards and the Edwards logo are trademarks of Edwards Limited.

3.10 External evacuation of hydrokinetic drive/gearbox (optional)

The hydrokinetic drive/gearbox may be evacuated using an external pump. A description of the connections required is beyond the scope of this manual.

Contact your supplier or your nearest Edwards company for advice if you wish to use this facility.

© Edwards Limited 2007. All rights reserved.
Edwards and the Edwards logo are trademarks of Edwards Limited.

Figure 22 - Flange loading limits

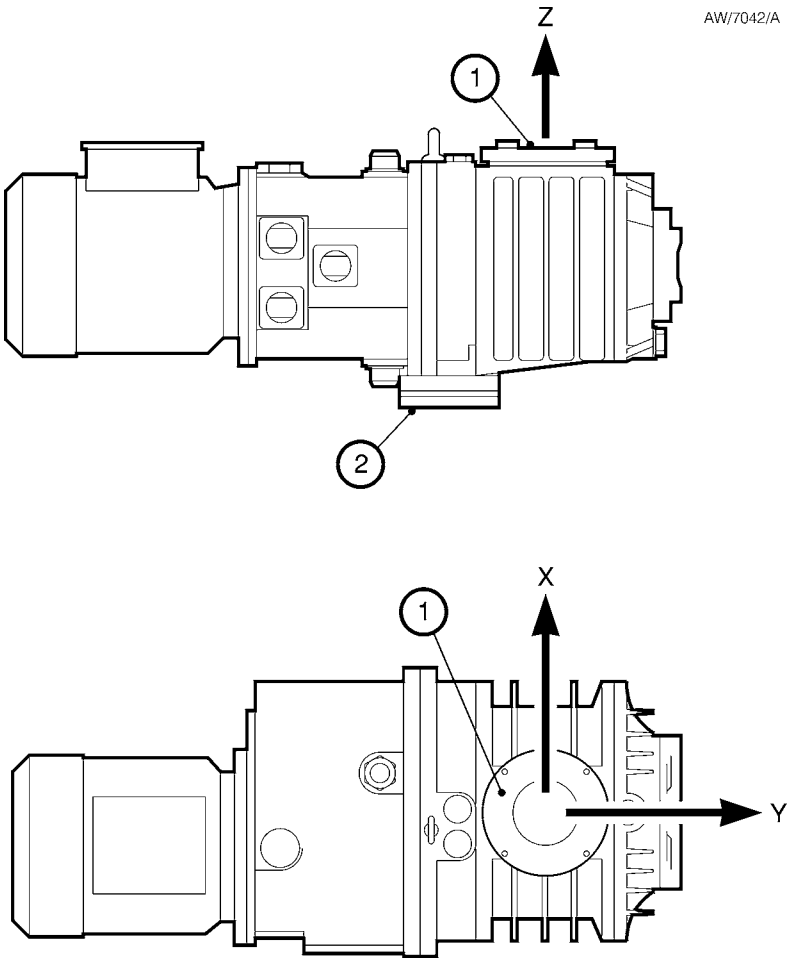

Note: *EH250 pump shown. The flange loading limits apply to all EH pumps.*

1. Pump-inlet
2. Pump-outlet

F Force
M Moment
R Resultant
X Load orientation
Y Load orientation
Z Load orientation

Maximum force	Pump-inlet		Pump-outlet	
FX	±1000 N	±224 lbf	±750 N	±168 lbf
FY	±1000 N	±224 lbf	±750 N	±168 lbf
FZ	±2000 N	±449 lbf	±1500 N	±337 lbf
FR	±2400 N	±539 lbf	±1800 N	±404 lbf
Maximum moment	**Pump-inlet**		**Pump-outlet**	
MX	±500 N m	±112 lbf ft	300 N m	± 67 lbf ft
MY	±500 N m	±112 lbf ft	300 N m	± 67 lbf ft
MZ	±500 N m	±112 lbf ft	300 N m	± 67 lbf ft
MR	±870 N m	±195 lbf ft	520 N m	±116 lbf ft

© Edwards Limited 2007. All rights reserved.
Edwards and the Edwards logo are trademarks of Edwards Limited.

4 Operation

4.1 Operational safety

WARNING

Ensure that the cooling-air flow around the EH pump and pump motor is not restricted. If the air flow is restricted, the pump and/or motor will get hotter than normal during pump operation:

- This may result in reduced reliability or the risk of an explosion.
- If the EH pump is part of an ATEX system, the high operating temperature may cause the motor thermistors to shut down the system as required by the ATEX safety interlock circuit (refer to Section 7 of the ATEX Instruction manual).

WARNING

During operation, parts of the EH pump can become very hot. Ensure that you do not touch the EH pump.

WARNING

Do not operate the EH pump with the inlet or outlet open to atmosphere. If you do, your fingers of other parts of your body may get trapped and you may be injured by the rotating pump mechanism.

Ensure that the cooling-air flow around the EH pump and pump-motor is not restricted. (Refer to the ambient temperature specification in Section 2.1). Take all necessary precautions to avoid accidental contact with the EH pump.

4.2 Start-up procedure

4.2.1 Pre-start checks

1. Check that the EH pump oil-levels are correct (see Section 3.4).
2. If the EH pump is part of an ATEX system, ensure that the gearbox purge is connected and the Nitrogen supply is on.
3. Check that the EH pump is correctly installed, especially after initial installation and maintenance.

© Edwards Limited 2007. All rights reserved.
Edwards and the Edwards logo are trademarks of Edwards Limited.

4.2.2 Start-up

Start-up the EH pump as described in the procedure below. This procedure assumes that the EH pump and the vacuum system are at atmospheric pressure.

1. On all of the EH1200, EH2600 and EH4200 model pumps only:
   - Switch on the cooling-water supply and check that there is an adequate flow of cooling-water at the correct pressure (see Section 2.8).
   - If the EH pump is part of an ATEX system, ensure that the water flow rate is adequate, and that the flow-switch indicates this.
   - Check the water connections for leaks.

Refer to Section 2.8 for the cooling-water requirements.

2. Close all valves to atmospheric pressure and ensure that all other openings are closed.
3. Switch on the backing pump and open the backing valve (if fitted).
4. Switch on the EH pump.
5. Allow the EH pump to run for approximately fifteen minutes to achieve normal operating temperature.
6. Slowly open the pump-inlet isolation-valve (if fitted).

4.3 Shut-down

CAUTION

If the pump is to be shut down for a long period or is due to be shipped on, refer to Section 6.1 for the storage instructions.

1. Close the pump-inlet isolation-valve (if fitted).
2. Leave the pump operating for sufficient time such that the pump is thoroughly purged of any hazardous substances.
3. Switch off the EH pump.
4. Open the backing pump air-admittance valve (if fitted) and switch off the backing pump.
5. On all of the EH1200, EH2600 and EH4200 model pumps only: turn off the cooling-water supply.

© Edwards Limited 2007. All rights reserved.
Edwards and the Edwards logo are trademarks of Edwards Limited.

5 Maintenance

5.1 Safety information

WARNING

Obey the safety instructions given below and take note of appropriate precautions. If you do not, you can cause injury to people and damage to equipment.

- A suitably trained and supervised technician must maintain the EH pump.
- Dismantle the EH pump in a clean workshop environment, with the correct tools and safety facilities available.
- Ensure that the maintenance technician is familiar with the safety procedures which relate to the products pumped. Wear the appropriate safety-clothing when you come into contact with contaminated components. Dismantle and clean contaminated components inside a fume-cupboard.
- Allow the EH pump to cool for at least three hours before you start maintenance work.
- Vent and purge the pumping system with nitrogen before you start maintenance work.
- Check that all the required parts are available and of the correct type before starting work.
- Isolate the EH pump and other components from the electrical supply so that they cannot be operated accidentally.
- Re-check the EH pump rotation direction if the electrical supply has been disconnected.
- Do not reuse 'O' rings and Co-Seals.
- Dispose of components and waste oil safely (see Section 6.2).
- Take care to protect sealing-faces from damage.
- Do not touch or inhale the thermal breakdown products of fluorinated materials which may be present if the EH pump has been overheated to 260 ºC and above. These breakdown products are very dangerous. Fluorinated materials in the EH pump may include oils, greases and seals. The EH pump may have overheated if it was misused, if it malfunctioned or if it was in a fire. Edwards Material Safety Data Sheets for fluorinated materials used in the EH pump are available on request: contact your supplier or Edwards.
- Leak-test your system after installation and maintenance to prevent leakage of dangerous substances out of the system and leakage of air into the system.

The EH pump will be contaminated with the process chemicals that have been pumped. Ensure that you take adequate precautions to protect people from the effects of dangerous substances if contamination has occurred.

Table 21 - Maintenance plan

Operation	Frequency	Refer to Section
Check the oil-levels	Daily * or Weekly †	5.3
Inspect the pump connections	Monthly	5.4
Change the pump oil	12 monthly	5.5
Lubricate the rear bearing	12 monthly	5.6
Overhaul the pump	6 yearly	5.7

* *Flammable materials pumped.*
† *Non-flammable materials pumped.*

© Edwards Limited 2007. All rights reserved.
Edwards and the Edwards logo are trademarks of Edwards Limited.

5.2 Maintenance plan

WARNING

Constructional safety ensures that ATEX compliant EH pumps can safely pump flammable gases. To ensure that the constructional safety of the ATEX compliant EH pump is not compromised, you must maintain the ATEX compliant EH pump in accordance with the schedule given in Table 21 and using the procedures described in Section 5.3 to 5.7 in this manual. If you do not, there may be a risk of explosion and, if the pump is part of an ATEX certified system, the ATEX certification may be invalidated.

Table 21 details the maintenance operations necessary to maintain EH pumps in normal use. Instructions for each operation are given in the section shown.

More frequent maintenance may be required if the EH pump is used to pump corrosive or abrasive gases and vapours. If necessary, adjust the maintenance plan according to your experience.

5.3 Check the oil-levels

WARNING

Ensure that the correct grade of oil is used and that the oil-levels in the pump are correct. If an incorrect oil is used or if an oil-level is incorrect, EH pump performance may be affected and the EH pump may be damaged, which will compromise its constructional safety.

Note: *If there is a loss of oil from the shaft-seal reservoir, the shaft-seal may have failed. Contact your supplier or a Edwards Service Centre for advice.*

Use the following procedure to check the oil-levels in the sight-glasses. Refer to Figure 1 and 2 for the location of the filler-plugs and sight-glasses. During normal operation, the hydrokinetic drive/gearbox sight-glass (Figure 11, item 3) may appear empty or show a froth because the oil is in circulation around the coupling.

1. Shut down the EH pump, vent it to atmospheric pressure and allow it to cool.
2. Refer to Figure 11. Check the shaft-seal oil-level. If the oil-level is below the bottom of the reflector plate (6), refer to Section 3.4 and refill the shaft-seal reservoir.
3. Check the hydrokinetic drive/gearbox oil-level. If the oil-level is below the top of the reflector plate, refer to Section 3.4 and refill the hydrokinetic drive/gearbox oil reservoir.
4. On all EH1200, EH2600 and EH4200 model pumps only, check the gear-cover oil-level. If the oil-level is below the middle of the reflector plate, refer to Section 3.4 and refill the gear-cover.

5.4 Inspect the pump connections

1. Check that the cooling-water connections are secure.
2. Inspect the cooling-water pipelines and connections for corrosion, leaks and damage.
3. Check that the electrical connections are secure.
4. Check the electrical supply cables for damage.
5. Inspect all the vacuum pipelines for corrosion and damage. Check that all the vacuum connections are secure.
6. On chemical and ATEX compliant EH pumps only:
   - Inspect the hydrokinetic drive/gearbox purge nitrogen supply pipeline for corrosion and damage.
   - Check that the pipeline connection to the hydrokinetic drive/gearbox is secure.

© Edwards Limited 2007. All rights reserved.
Edwards and the Edwards logo are trademarks of Edwards Limited.

5.5 Change the pump oil

WARNING

Changing the oil in an EH pump from hydrocarbon to PFPE (Fomblin) could potentially cause a safety hazard. Fomblin EH pumps are generally used in hazardous applications which may involve the pumping of gases with high concentrations of oxygen. If hydrocarbon oil comes into contact with gases with an oxygen concentration greater than 25%, an explosion can occur.

Therefore, if you want to convert an EH pump that has been used with hydrocarbon oil to use PFPE (Fomblin) oil, you cannot simply flush the EH pump with new PFPE oil. You must return the EH pump to a Edwards Service Centre for overhaul and cleaning by qualified Edwards service engineers. The change in oil type requires a complete strip down of the EH pump, and thorough cleaning of all parts, so that all traces of hydrocarbon oil are removed.

WARNING

Ensure that the correct grade of oil is used and that the oil-levels in the pump are correct. If an incorrect oil is used or if an oil-level is incorrect, EH pump performance may be affected and the EH pump may be damaged, which will compromise its constructional safety.

Replace the pump oil as described below. Refer to Figure 1 and 2 for the location of the oil-filler and drain-plugs.

1. Switch off the EH pump, vent it to atmospheric pressure and allow it to cool.
2. Remove the hydrokinetic drive/gearbox oil filler-plug.
3. Remove the hydrokinetic drive/gearbox oil drain-plug from the underside of the hydrokinetic drive/gearbox and allow the oil to drain into a suitable container.
4. Remove the shaft-seal vented oil filler-plug. Use a suitable pump to suck the oil out of the shaft-seal reservoir.
5. Refit the hydrokinetic drive/gearbox oil drain-plug.
6. Refer to Section 3.4 and fill the hydrokinetic drive/gearbox and shaft-seal reservoir with oil.
7. Refit the hydrokinetic drive/gearbox oil filler-plug and the shaft-seal reservoir oil filler-plug.
8. On all EH1200, EH2600 and EH4200 model pumps only:
   - Remove the oil filler-plug on the gear-cover.
   - Remove the oil drain-plug from the underside of the gear-cover and allow the oil to drain into a suitable container.
   - Refit the oil drain-plug and refer to Section 3.4 to refill the gear-cover with oil.
   - Refit the oil filler-plug.

© Edwards Limited 2007. All rights reserved.
Edwards and the Edwards logo are trademarks of Edwards Limited.

5.6 Lubricate the rear-bearing (All EH250 and EH500 model pumps only)

WARNING

When you remove the end-cover, take note of the exact locations of the spacers and shims (Figure 23, items 3 and 4) inside the end-cover. You must refit these items correctly in order to ensure that the rotor clearance settings remain correct. Altering the rotor clearance settings may compromise the constructional safety of the pump and, if the pump is part of an ATEX system, may invalidate the system certification.

Use the following procedure to replace the grease in the rear-bearing. Refer to Section 2.6 for the correct type/grade of grease.

1. Switch off the EH pump and isolate it from the electrical supply. Vent the EH pump to atmospheric pressure.
2. Refer to Figure 23. Remove the four plastic cover-caps (8) from the bearing end-cover (6).
3. Undo and remove the socket-head screws (7) located under the four plastic cover-caps.
4. Remove the end-cover (6) and 'O' ring (5). Dispose of the 'O' ring safely.
5. Note the exact location of the shims (4) and spacers (3) inside the end-cover (6). Clean off all visible grease from the end-cover taking care not to misplace or damage the shims and spacers.
6. Use a soft, clean, lint free cloth or a plastic or wooden spatula to remove all visible grease from both bearings (2).
7. Fill the visible side of each bearing (2) with clean grease, then lightly force the grease into the bearing.
8. Refill the visible side of each bearing (2) with clean grease.
9. Apply a light wipe of high-vacuum grease to the new 'O' ring (5) and fit into the groove in the end cover (6).
10. Check that the shims (4) and spacers (3) are correctly located in the end-cover (6).
11. Refit the end-cover (6) and secure it with the four socket-head screws (7). Tighten the screws evenly and refit the plastic cover-caps (8).
12. Leak test the system and seal any leaks found.

© Edwards Limited 2007. All rights reserved.
Edwards and the Edwards logo are trademarks of Edwards Limited.

5.7 Overhaul the pump

The EH pump can only be overhauled by Edwards service engineers: contact your supplier or Edwards for advice.

Figure 23 - Lubricate the rear bearing (EH250, EH500 and EH500IND pumps only)

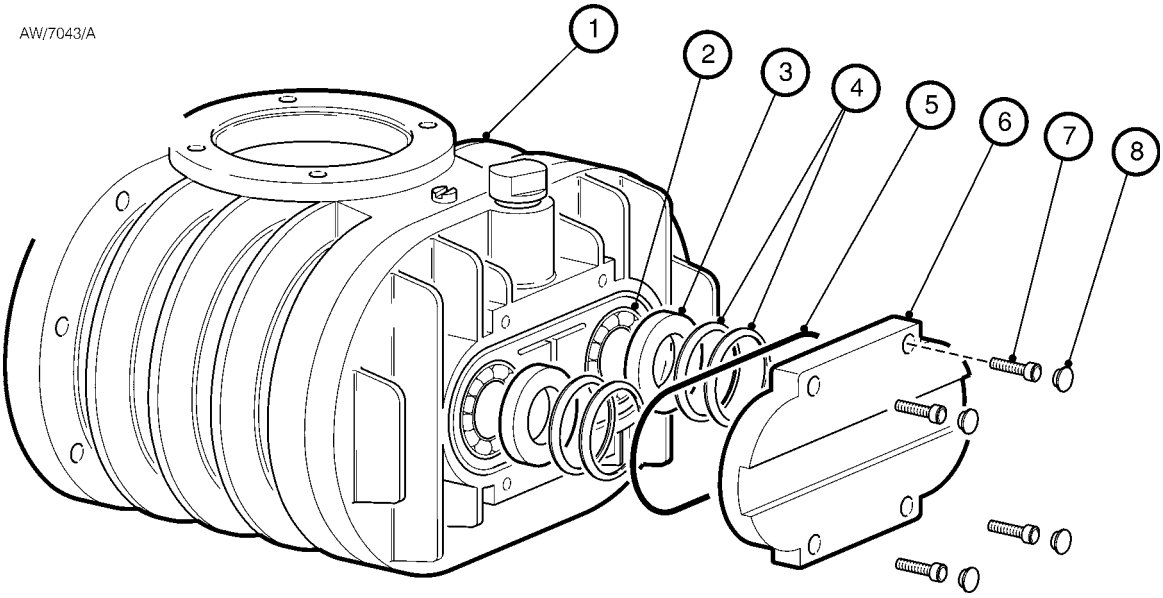

1. Pump-body
2. Bearing
3. Spacer
4. Shims
5. 'O' ring
6. End-cover
7. Socket-head screw
8. Cover-cap

© Edwards Limited 2007. All rights reserved.
Edwards and the Edwards logo are trademarks of Edwards Limited.

This page has been intentionally left blank.

© Edwards Limited 2007. All rights reserved.
Edwards and the Edwards logo are trademarks of Edwards Limited.

6 Storage and Disposal

6.1 Storage

CAUTION

Observe the storage temperature limits stated in Section 2.1. Storage below -30 °C will permanently damage the EH pump seals and lubricants.

CAUTION

Ensure that the water lines are emptied if the pump will be stored below 0 °C. If you do not, the water in the lines will freeze and may cause the pipes to burst. If the pump is to be shipped by air, the temperature in the hold can drop to -50 °C. In such cases it is important that the lines are completely emptied of water.

Use the procedure below to store the EH pump.

1. Shut-down the EH pump as described in Section 4.3.
2. Isolate the EH pump from the electrical supply and disconnect it from the vacuum system.
3. Clean the EH pump and change the oil as described in Section 5.5.
4. Place protective covers over the inlet and outlet-flanges.
5. Store the EH pump in cool, dry conditions until required for use. When required, prepare and install the EH pump as described in Section 3.

6.2 Disposal

Dispose of the EH pump and any components safely in accordance with all local and national safety and environmental requirements.

Take particular care with components and waste oil which have been contaminated with dangerous process substances.

© Edwards Limited 2007. All rights reserved.
Edwards and the Edwards logo are trademarks of Edwards Limited.

This page has been intentionally left blank.

© Edwards Limited 2007. All rights reserved.
Edwards and the Edwards logo are trademarks of Edwards Limited.

7 Service and Spares

7.1 Introduction

Edwards products and spares are available from Edwards companies in Belgium, Brazil, Canada, China, France, Germany, Israel, Italy, Japan, Korea, Singapore, Switzerland, United Kingdom, U.S.A, and a world-wide network of distributors. The majority of these centres employ Service Engineers who have undergone comprehensive Edwards training courses.

Order spare parts from your nearest Edwards company or distributor. When you order, please state for each part required:

- Model and Item Number of your equipment
- Serial number (if any)
- Item Number and description of part.

7.2 Service

Edwards products are supported by a world-wide network of Edwards Service Centres. Each Service Centre offers a wide range of options including: equipment decontamination; service exchange; repair; rebuild and testing to factory specifications. Equipment which has been serviced, repaired or rebuilt is returned with a full warranty.

Your local Service Centre can also provide Edwards engineers to support on-site maintenance, service or repair of your equipment.

For more information about service options, contact your nearest Service Centre or other Edwards company.

7.3 Spares

The spare parts listed in Table 22 are available for the EH pump.

Table 22 - Spare item numbers

Spare	Item Number
AR555 Fomblin grease (100 g tube)	H113-50-013
End-cover ‘O’ ring	H021-22-091
Ultragrade 20 oil (1 l)	H110-24-015
Ultragrade 20 oil (4 l)	H110-24-013
Krytox 1514 fluid (1 kg)	H113-08-018
Krytox 1514 fluid (5 kg)	H113-08-020

The spare parts listed in Table 23 are available for the EH250 and EH500 pumps.

Table 23 - EH250 and EH500 spare parts

Spare	Item Number
Clean and overhaul kit	A301-51-815
Module kit	A301-51-820
Shim kit	A301-51-825
EH250 inlet mesh assembly 3.3 mm ISO63	C105-21-085
EH250 inlet mesh assembly 3.5 mm ISO63 stainless steel	A600-41-029
EH500 inlet mesh assembly 3.3 mm ISO100	C105-23-085
EH500 inlet mesh assembly 3.5 mm ISO100 stainless steel	A600-41-569

© Edwards Limited 2007. All rights reserved.
Edwards and the Edwards logo are trademarks of Edwards Limited.

The spare parts listed in Table 24 are available for the EH1200 pumps.

Table 24 - EH1200 spare parts

Spare	Item Number
Clean and overhaul kit	A305-51-815
Module kit	A305-51-820
Shim kit	A305-51-825
EH1200 inlet mesh assembly 3.3 mm ISO160	C105-24-085
EH1200 inelt mesh assembly 3.5 mm ISO160 stainless steel	A600-41-570

The spare parts listed in Table 25 are available for the EH1200 pumps.

Table 25 - EH2600 and EH4200 spare parts

Spare	Item Number
Clean and overhaul kit	A307-51-815
Module kit	A307-51-820
Shim kit	A307-51-825
EH2600 inlet mesh assembly 3.3 mm ISO160	C105-24-085
EH2600 inelt mesh assembly 3.5 mm ISO160 stainless steel	A600-41-570
EH4200 inlet mesh assembly 3.5 mm ISO250 stainless steel	A600-41-571

© Edwards Limited 2007. All rights reserved.
Edwards and the Edwards logo are trademarks of Edwards Limited.