Installation & Operation Manual

SolidSense II® GR & GP Series Pressure Transducers

BROOKS® INSTRUMENT

Beyond Measure

Essential Instructions

Read before proceeding!

Brooks Instrument designs, manufactures and tests its products to meet many national and international standards. These products must be property installed, operated and maintained to ensure they continue to operate within their normal specifications. The following instructions must be adhered to and integrated into your safety program when installing, operating and maintaining Brooks Instrument products.

- To ensure proper performance, use qualified personnel to install, operate, update, program and maintain the product.
- Read all instructans prior to installing, operating and servicing the product. If this instruction manual is not the correct manual, please see back cover for local sales office contact information. Save this instruction manual for future reference.

⚠ WARNING. Do not operate this instrument in excess of the specifications in product data sheet. Failure to heed this warning can result in serious personal injury and/or damage to the equipment.

- If you do not understand any of the instructions, contact your Brooks Instrument representative for clarification.
- Follow all warnings, cautions and instructions marked on and supplied with the product.

⚠ WARNING. Prior to installation ensure this instrument has the required approval ratings to meet local and national codes Failure to heed this warning can result in serious personal injury and/or damage to the equipment.

- Install your equipment as specified in the installation instructions of the appropriate instruction manual and per applicable local and national codes. Connect all products to the proper electrical and pressure sources.
- Operation: (1) Slowly apply pressure into the system to avoid pressure surge. (2) Check for leaks around the pressure transducer and its pressure fitting. If no leaks are present; bring the system up to the operating pressure.
- Please make sure that the process line pressure is removed prior to service. When replacement parts are required, ensure that qualified people use replacement parts specified by Brooks Instrument. Unauthorized parts and procedures can affect the product's performance and place the safe operation of your process at risk. Look-alike substitutions may result in leak, fire, electrical hazards or improper operation.
- Ensure that all equipment doors are closed and protective covers are in place to prevent electrical shock and personal injury, except when maintenance is being performed by qualified persons.

⚠ WARNING: For liquid flow system, if the inlet and outlet valves adjacent to the transducer are to be closed for any reason, the transducer must be completely drained. Failure to do so may result in thermal expansion of the liquid that can rupture the transducer and may cause personal injury.

European Electromagnetic Compatibility (EMC)

The Brooks Instrument (electric/electronic) equipment bearing the CE mark has been successfully tested to the regulations of the Electro Magnetic Compatibility (EMC directive 2014/30/EU).
Special attention however is required when selecting the signal cable to be used with CE marked equipment.
Quality of the signal cable, cable glands and connectors,
Brooks Instrument supplies high quality cable(s) which meets the specification for CE certification.
If you provide your own signal cable you should use a cable which is overall completely screened with a 100% shield.
Mating connectors, if their housings are not metal, or metal but not connected to cable shield and the cable shield is not grounded, EMC compliance might be violated.
Card Edge Connectors are standard non-metallic. The cables used must be screened with 100% shield to comply with CE certification.
Refer to product data sheet for wiring information.

ESD (Electrostatic Discharge)

⚠ CAUTION: This instrument contains electronic components that are susceptible to damage by static electricity: Proper handling procedures must be observed during the removal, installation or other handling of internal circuit boards or devices.
Handling Procedure:

1. Power to unit must be removed during transportation.
2. Personnel must be grounded via a wrist strap or other safe, suitable means before handling.
3. Transducer must be transported in a ESD protection package or environment.

⚠ WARNING

Do not operate this instrument in excess of the specifications listed in this manual. Failure to heed this warning can result in serious personal injury and/or damage to the equipment

⚠ CAUTION

It is the user's responsibility to select and approve all materials of construction. Careful attention to metallurgy, engineered materials and elastomeric materials is critical to safe operation.

Contents

Section 1 Introduction

Introduction 4
Intended Use 4
Warning and Caution Statements 4

Section 2 Specifications and Installation

Display Parameters 5
Wiring Diagrams 6
Display Menu 8
Receipt of Equipment 9
Recommended Storage Practice 9
Return Shipment 9
Transit Precautions 9
Removal from Storage 9
Mechanical Connections 9
Electrical Connections 10

Warranty, Local Sales/Service Contract Information ..... Back Cover

Introduction

This manual covers the Brooks SolidSense II® GR & GP Series pressure transducers. Included herein is general information, operating specifications, installation, removal instructions and product warranty information.

It is recommended that this manual be read in its entirety before attempting to install and operate the GR & GP Series devices.

Intended Use

The Brooks GR & GP Series pressure transducers meet the most rigid semiconductor and industrial ultra high purity application requirements. With accuracy of 0.25% of full scale, GR & GP pressure transducers are used to provide years of reliable pressure monitoring in a variety of applications. The GR & GP Series pressure transducers have one of the smallest footprints in the industry for quick and easy installation in the tightest area.

Warning and Caution Statements

Warning and caution statements are located throughout this manual in the ANSI format.

A WARNING statement indicates a potentially hazardous situation which, if not avoided, could result in death or serious injury.

A CAUTION statement indicates a potentially hazardous situation which, if not avoided, MAY result in minor or moderate injury. It may also be used to alert against unsafe practices.

Display Digit Rule

Pressure Unit	Max Pressure	Decimal Point	Examples
PSI	4000	0 OR 1	-12.3, 001.2, 012.3, 123.4, 1234
TORR	9999	N/A	-001, 0001, 0012, 0123, 1234
KPA	9999	N/A	-012, 0001, 0012, 0123, 1234
BAR	276	1 OR 2	-0.12, 00.01, 00.12, 01.23, 12.34, 123.4
MPA	27.6	2 OR 3	-0.10, 0.001, 0.012, 0.123, 1.234, 12.34
Overpressure: When pressure is 110% F.S. (±5% F.S.) or higher, display steady 1---			

Hysteresis

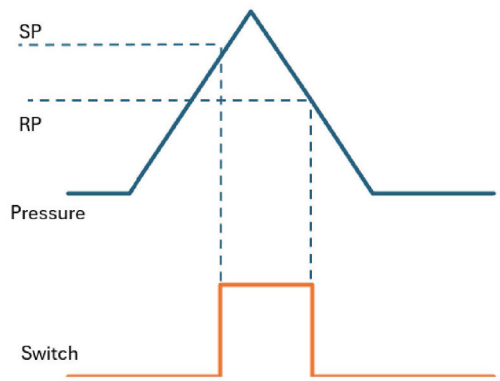

Delay

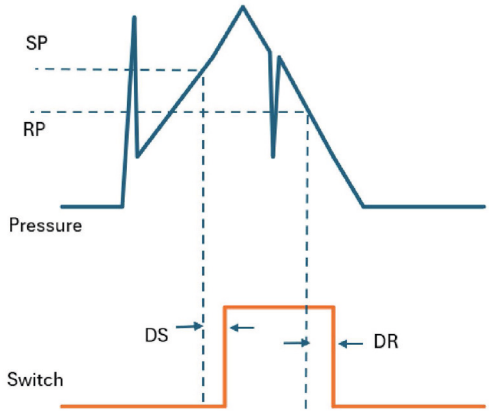

Display Parameters

Parameters	Description	Setting Range	Factory Setting
SET0	Device Zero Function, set analog output and display to base pressure reading. For devices with absolute and compound ranges, users may not be able to pump to very low vaccum but can initiate a zeroing procedure at a predetermined pressure of up to 5.00%FS (defined by the user in the SET0 submenu). This action will calibrate the device to reflect the accurate base pressure reading.	Limited to ideal zero ±5% F.S.	00.00 for abs and compound device
OUT1 / OUT2	Switching function, switching output (1 or 2)	OFF = always off ON = always on NO = normally open NC = normally closed	NO = Normally Open
SP1 / SP2	Ascending pressure switch point, switching output (1 or 2), in percentage of full scale range, 0.5~100.0, one decimal point	Min: Start of measuring range +0.5% Max: End of measuring range	60.0 (=60% F.S.)
RP1 / PR2	Descending pressure reset point, switching output (1 or 2), in percentage of full scale rangem 0.0~99.5, one decimal point	Min: Start of measuring range Max: SP1/SP2 -0.5%	40.0 (=40% F.S.)
DS1 / DS2	Switch Delay Time for ascending pressure meeting SP1/SP2 setpoints for the DS1/DS2 duration without interruption. Purpose: to avoid switching during short duration pressure spike condition.	0 ... 50 sec	0 sec
DR1 / DR2	Switch Delay Time for descending pressure meeting RP1/RP2 setpoints for the DR1/DR2 duration without interruption. Purpose: to avoid switching during short duration pressure spike condition.	0 ... 50 sec	0 sec
UNIT	Switching pressure units	PSI/TORR/KPA/MPA/BAR	Per product label
LOAD	Load factory parameter settings for SP, RP, DS, DR, OUT, DSU, UNIT; does not affect pressure signal output	Yes/No	NOT APPLICABLE
Display Over Range (>9999): Flash 9999 0.5 Sec on/off when pressure unit selcted is too small and pressure is below 110% F.S. (±5% F.S.)			

Examples of pressure %F.S. used in SET0, SP1/SP2, RP1/RP2:
For F.S. 0~200 psia: 0%F.S.=0 psia, 50%F.S.=100 psia, 100%F.S.=200 psia
For F.S. -14.7~30 psig: 0%F.S.=-14.7 psig, 50%F.S.=7.65 psig, 100%F.S.=30 psig

Wiring Diagrams

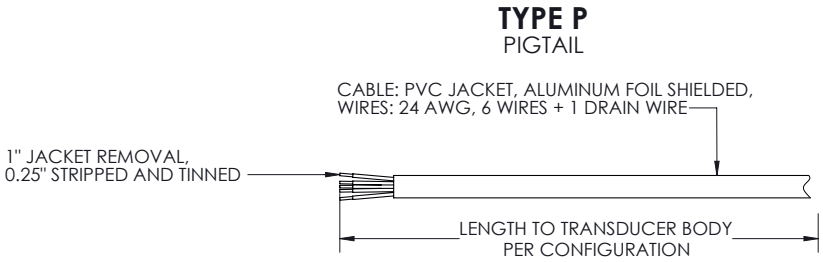

Electrical Connection Wiring (POS 10-13)

Cable drain wire is always connected to the metal housing inside the transducer

Output Code	+ Supply (+E)	+ Output (+O)	- Supply (-E)	- Output (-O)	SP1	SP2	SP COMMON	TRIM WIRES
1	RED	WHITE	GREEN	BROWN	-	-	-	BLUE, YELLOW
2, 3, 5, 6, 7, 8, 9, S, P	RED	GREEN	BLUE		YELLOW	WHITE	BROWN	N/A
4	RED	-	WHITE	-	-	-	-	GREEN, BROWN, BLUE, YELLOW
0	RED	-	GREEN	-	-	-	-	WHITE, BROWN, BLUE, YELLOW

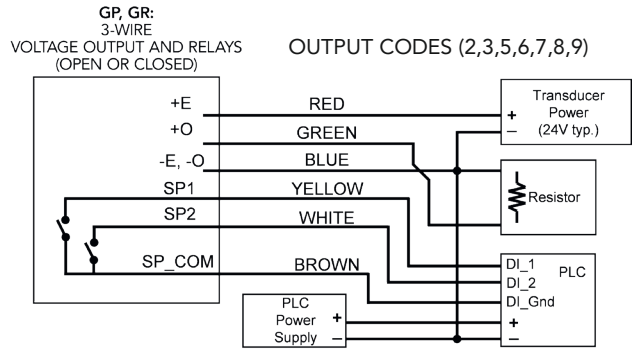

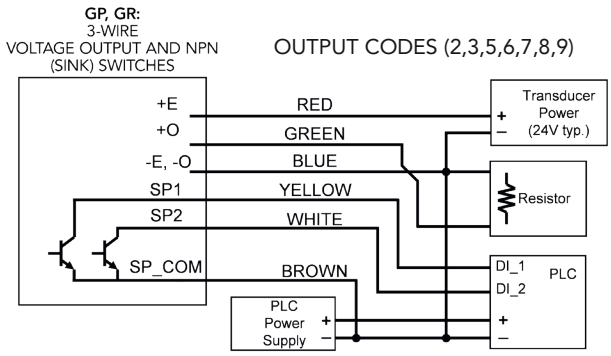

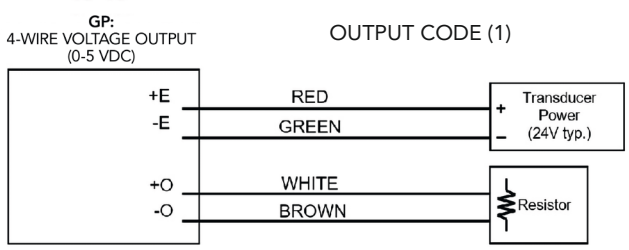

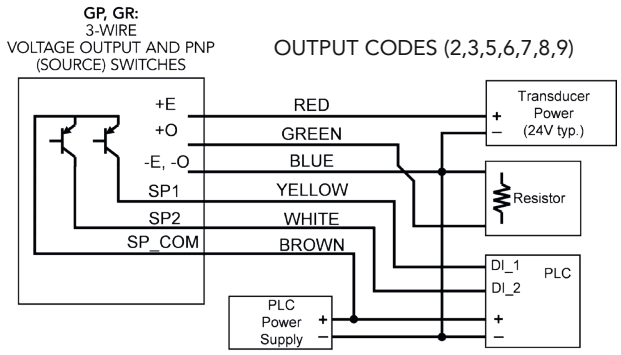

GP, GR:
3-WIRE CURRENT SINK OUTPUT AND RELAYS (OPEN OR CLOSED)

OUTPUT CODE (S)

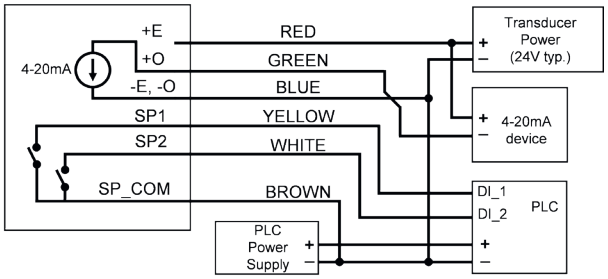

GP, GR:
3-WIRE CURRENT SOURCE OUTPUT AND RELAYS (OPEN OR CLOSED)

OUTPUT CODE (P)

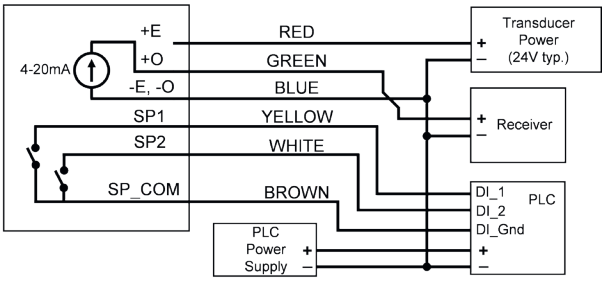

GP, GR:
3-WIRE CURRENT SINK OUTPUT AND NPN (SINK) SWITCHES

OUTPUT CODE (S)

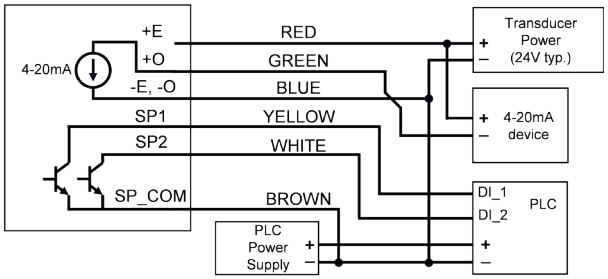

GP, GR:
3-WIRE CURRENT SOURCE OUTPUT AND NPN (SINK) SWITCHES

OUTPUT CODE (P)

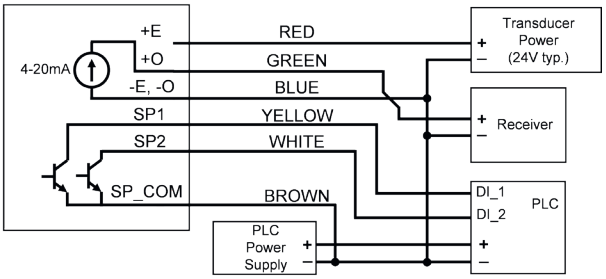

GP, GR:
3-WIRE CURRENT SINK OUTPUT AND PNP (SOURCE) SWITCHES

OUTPUT CODE (S)

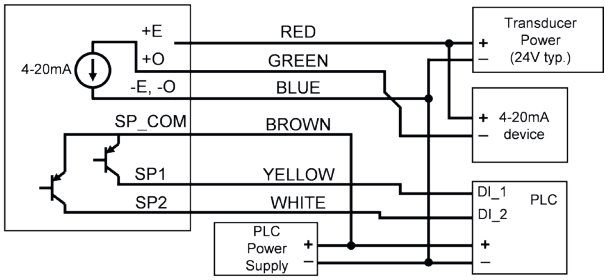

GP, GR:
3-WIRE CURRENT SOURCE OUTPUT AND PNP (SOURCE) SWITCHES

OUTPUT CODE (P)

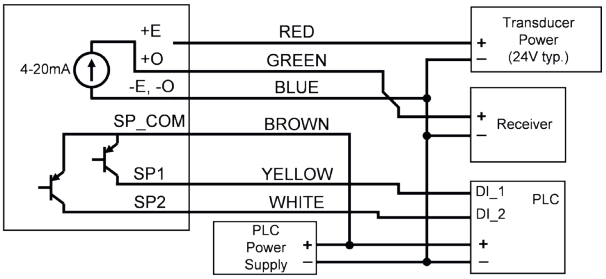

GP, GR:
DISPLAY ONLY, NO SIGNAL OUTPUT

OUTPUT CODE (0)

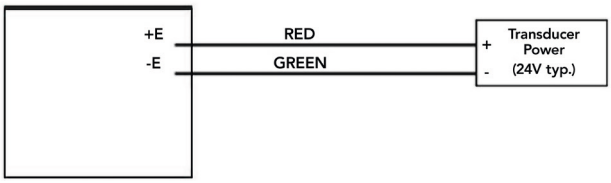

GP, GR:
2-WIRE CURRENT OUTPUT

OUTPUT CODE (4)

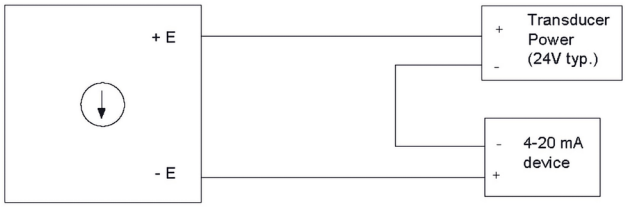

Display Menu

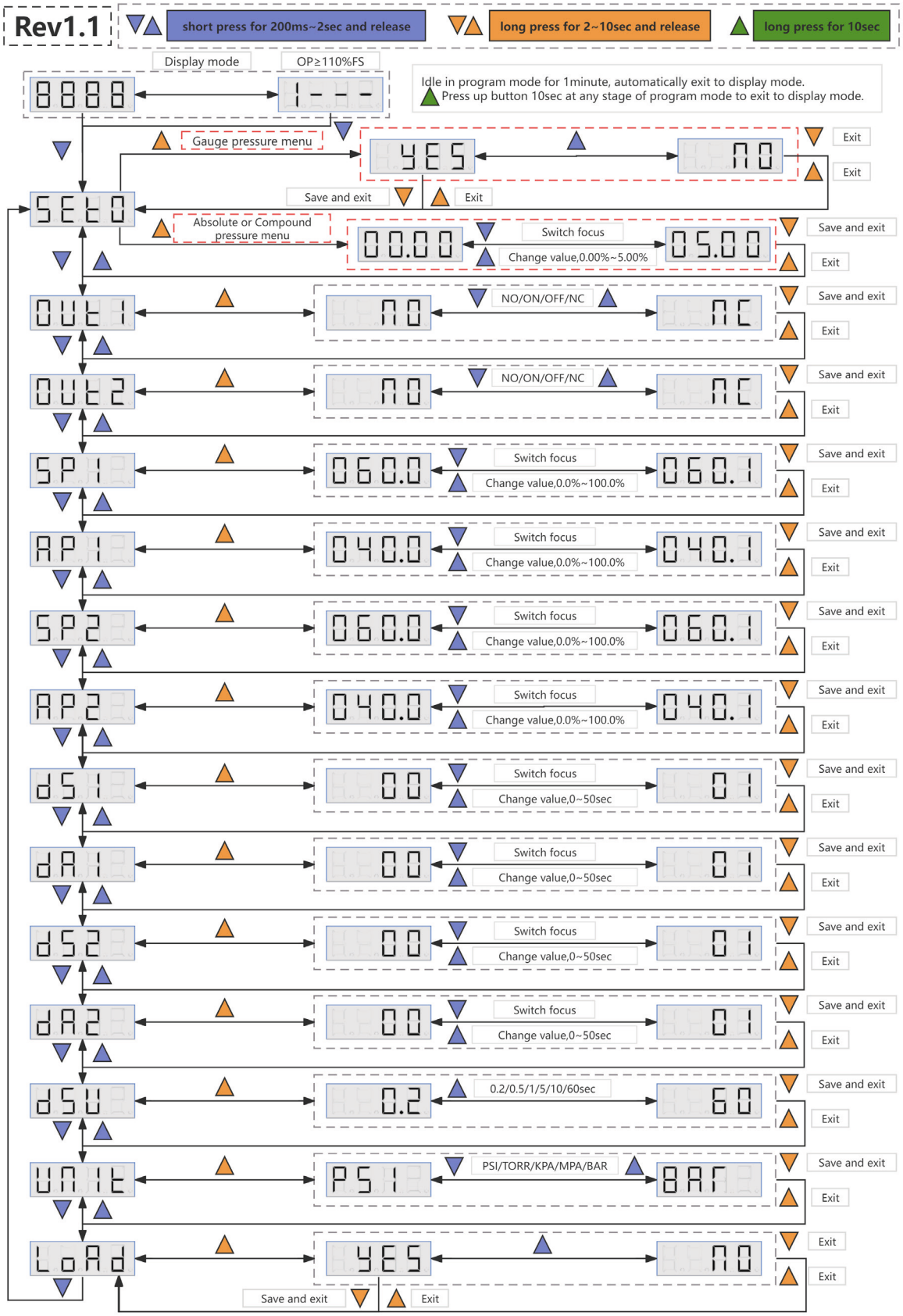

Receipt of Equipment

When the product is received, the outside packing case should be checked for damage incurred during shipment. If the packing case is damaged, the local carrier should be notified at once regarding his liability. A report should be submitted to the nearest Brooks Instrument location listed on the Global Service Network page on our website: BrooksInstrument.com/GlobalSupportCenters

Remove the envelope containing the packing list. Carefully remove the instrument from the packing case. Make sure spare parts are not discarded with the packing materials. Inspect for damaged or missing parts.

Recommended Storage Practice

If intermediate or long-term storage of equipment is required, it is recommended that the equipment be stored in accordance with the following:

a. Within the original shipping container.

b. Ambient temperature 25°C (78°F) nominal, 60°C (140°F) maximum, -20°C (-4°F) minimum.

c. Relative humidity 70% maximum.

Return Shipment

Prior to returning any instrument to the factory for any reason, visit our website for instructions on how to obtain a Return Materials Authorization Number (RMA #) and complete a Decontamination Statement to accompany it: BrooksInstrument.com/Service. All instruments returned to Brooks also require a Material Safety Data Sheet (MSDS) for the fluid(s) used in the instrument. Failure to provide this information will withhold processing of the instrument.

Instrument must have been purged in accordance with the following:

⚠ WARNING

Before returning the device purge thoroughly with a dry inert gas such as Nitrogen before disconnecting gas connections. Failure to correctly purge the instrument could result in fire, explosion or death. Corrosion or contamination may occur upon exposure to air.

Transit Precautions

To safeguard against damage during transit, transport the device to the installation site in the same container used for transportation from the factory, if circumstances permit.

Removal from Storage

Upon removal of the device from storage, a visual inspection should be conducted to verify its “as-received” condition. If the device has been subject to storage conditions in excess of those recommended (refer to “Recommended Storage Practice” above), if applicable, it should be subjected to a pneumatic pressure test in accordance with applicable vessel codes.

Mechanical Connections

⚠ CAUTION

Failure to follow these procedures may adversely affect the product's performance and could void the product warranty. Inspect but DO NOT remove from package any parts until installation. Contact your Brooks representative with any problems.

1. The GR & GP pressure transducers are double-bagged for cleanroom service and should remain packaged until installation. DO NOT remove the pressure transducer from the protective bag unless you are in a clean environment.

   a. Remove the pressure transducer from the box and carry it into the gray area.

   b. Remove the outer protective bag and discard.

⚠ CAUTION

HANDLE CAREFULLY! This SolidSense II pressure transducer is a precision Instrument and works by measuring stress. Therefore, the less stress placed on the SolidSense II pressure transducer during installation and handling, the greater its accuracy and life span will be.

   c. Carry the pressure transducer (sealed in inner bag) into the cleanroom.

2. Install the GR or GP pressure transducer.

   a. Prepare the connection fitting in place on the gas line. Any other fitting components, such as stainless steel gaskets, should be blown clean with filtered gas before use.

   b. Maintain a flow of at least 1 slpm (0.05 scfm) of inert gas during installation to minimize tubing and pressure transducer contamination from environmental moisture and particles. The recommended purge gas is electronic-grade Nitrogen.

   c. Open the inner bag and remove the pressure transducer. Remove any fitting protection caps and seat the pressure transducer on the mating connections.

   d. Follow the industrial standard procedure to install the pressure fitting connection

⚠ CAUTION

DO NOT overtighten fittings. Refer to specific technical guidelines that are supplied through the fitting manufacturer.

3. Prepare the GR or GP pressure transducer for use.

   a. Verify integrity of the seal by appropriate helium leak-testing procedures.

   b. Turn the gas flow ON then OFF, 10 times to remove any particles generated during installation. (The flow rate used should at least equal the process flow specifications.)

   c. Mechanical Installation is complete. Complete the electrical wiring connections as noted in the next section.

Electrical Connections

1. Follow the wiring instructions per product specifications.

2. Do not connect the drain wire of the transducer unless the transducer manifold is not connected to earth ground, and in this case connect the drain wire to earth ground.

3. After verifying proper pressure is applied to the transducer, power up the transducer and confirm it works as intended.

⚠ WARNING

Explosion Hazard. Do not disconnect equipment when flammable or combustible atmosphere is present.
Explosion Hazard. Do not disconnect while circuit is live unless area is known to be non-hazardous.

LIMITED WARRANTY

Visit www.BrooksInstrument.com for the terms and conditions of our limited warranty.

BROOKS SERVICE AND SUPPORT

Brooks is committed to assuring all of our customers receive the optimal solution for their application, along with outstanding service and support to back it up. We operate first class repair facilities located around the world to provide rapid response and support. Each location utilizes primary standard calibration equipment to ensure accuracy and reliability for repairs and recalibration and is certified by our local Weights and Measures Authorities and traceable to the relevant International Standards.

Visit www.BrooksInstrument.com to locate the service location nearest to you.

START-UP SERVICE AND IN-SITU CALIBRATION

Brooks Instrument can provide start-up service prior to operation when required.
For some process applications, where ISO-9001 Quality Certification is important, it is mandatory to verify and/or (re)calibrate the products periodically. In many cases this service can be provided under in-situ conditions, and the results will be traceable to the relevant international quality standards.

SEMINARS AND TRAINING

Brooks Instrument can provide seminars and dedicated training to engineers, end users and maintenance persons.

Please contact your nearest sales representative for more details.

Due to Brooks Instrument's commitment to continuous improvement of our products, all specifications are subject to change without notice.

TRADEMARKS
Brooks is a trademark of Brooks Instrument, LLC
All other trademarks are the property of their respective owners.

Installation-Manual-SolidSense-II-GR-GP-EN/2026-06

Global Headquarters
Brooks Instrument
407 West Vine Street
Hatfield, PA
19440-0903 USA

Toll-Free (USA): 888-554-FLOW
T: 215-362-3500
BrooksAM@BrooksInstrument.com

A list of all Brooks Instrument locations and contact details can be found at www.BrooksInstrument.com

©Copyright 2026 Brooks Instrument, LLC All rights reserved. Printed in U.S.A.

BROOKS® INSTRUMENT
Beyond Measure