BROOKS® INSTRUMENT

Beyond Measure

MT3809G Series

Metal Tube Variable Area Flow Meters for High Pressures and Extreme Temperatures

Brooks® MT3809 all-metal flowmeter has been the "go-to" meter for decades and the choice of Engineering, Procurement and Construction (EPC) companies. Its operation is based on the variable area principle and is ideal for a variety of gas, liquid and steam applications. These meters are indispensable where high pressures or high temperature operating conditions exist.

The primary meter is available in 316/316L stainless steel as well as with an ETFE liner. But a wide range of corrosion resistant materials of construction are available which makes it a perfect fit for metering of aggressive applications.

A broad range of connection sizes and types such as ASME, DIN and JIS flange choices along with several threaded options provide for flexible installations.

The very popular mechanical indicator option does not require power which reduces installation costs and is a cost-effective solution for flow measurement in hazardous areas. Optional accessories available includes transmitter with 4-20 mA analog output with HART® communications or FoundationTM Fieldbus communications with or without configurable alarms and pulse output for totalization. Also available are front adjustable inductive alarms, high temperature or stainless steel indicator housings, valves, flow controllers and certifications.

Features & Benefits

Transmitter with 4-20mA/HART-7 or FoundationTM Fieldbus Communications
Local Operator Interface with LCD display is adjustable without removing the cover so changes can be made even in hazardous areas
316SS flameproof housing that meets IIC/Class 1 Div 1 to handle the toughest hazardous applications
The broadest range of operating temperatures in the industry, the perfect meter for difficult applications
Lower flow rates with the current lay lengths which means one meter style can be used for very low to high flow rates
Meter is designed to ASME B31.3 and the gasket sealing surface is per ASME, a rugged design that does not require special gaskets at installation
Weldneck flanges are standard for MT3809 and MT3810 which means full penetration welds that can easily be tested for integrity
Mechanical and alarm design that meets SIL 2 requirements

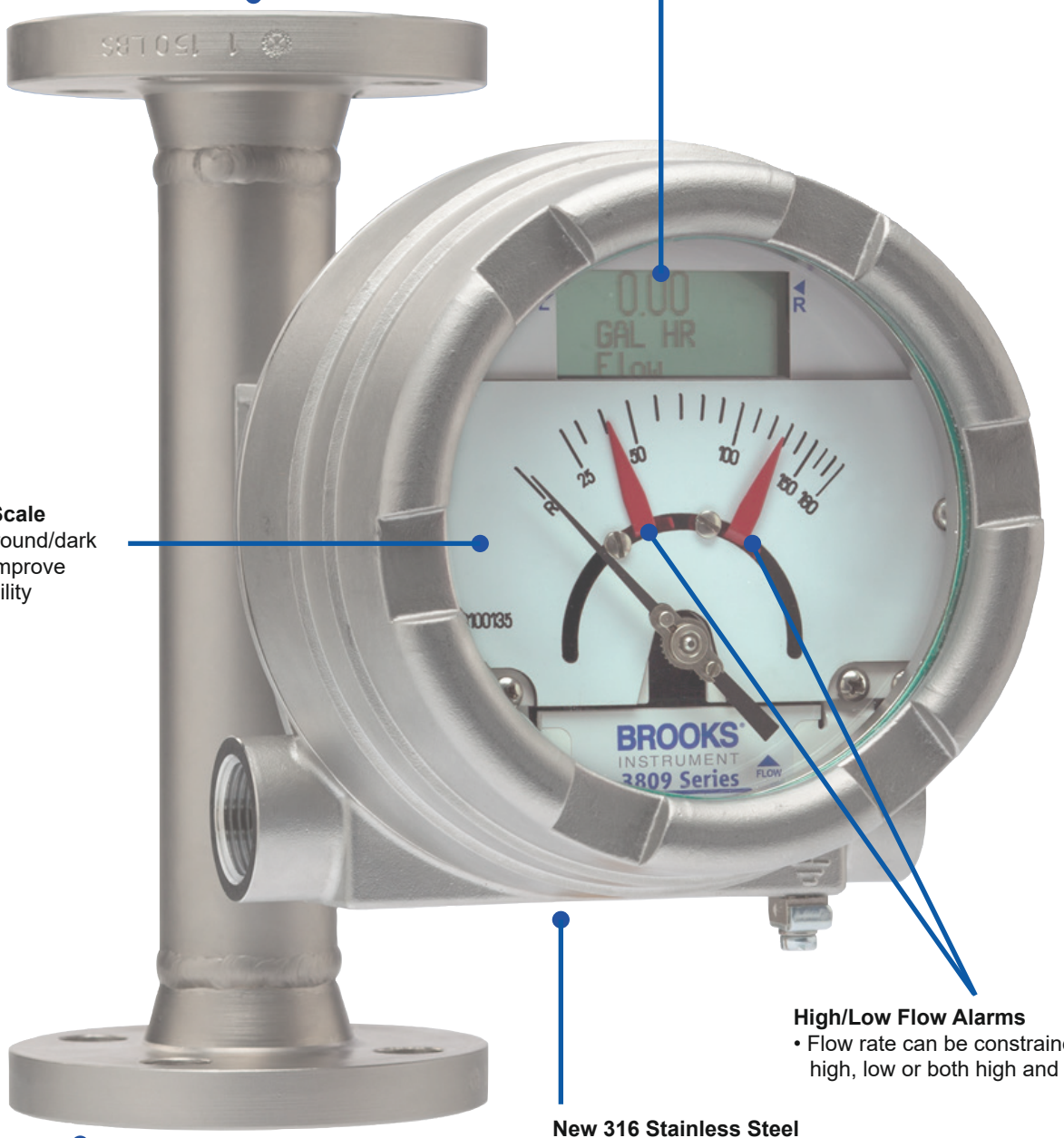

Improved Gasket Sealing Surface
- Gasket sealing surface meets ASME, special gaskets are not required

LCD Display
- Three line display
- Adjust with/without cover in place
- Multiple outputs can be displayed on one screen

Redesigned Scale
- White background/dark increments improve scale readability

High/Low Flow Alarms
- Flow rate can be constrained high, low or both high and low

New 316 Stainless Steel Flameproof Housing
- Meets IIC/Class 1 Division 1 hazardous area rating
- Broadest operating temperature of any VA meter

Weldneck Flanges
- Full penetration welds which can be examined for integrity

316 SS Flameproof Housing

The 3809 flameproof housing has been redesigned and improved. The option is made of 316 stainless steel. This includes housing, cover, bracket and hardware. The new option now meets ATEX gas group IIC/NA class 1 Division 1. This is the highest gas protection rating available. Now this option can be used in more hazardous area applications. This option also has the broadest operating temperature range of any Variable Area meter. The new 3809 can be used in applications from -198°C to +420°C (-325°F to +788°F).

LCD Display

The 4-20 mA output transmitter is still available with remote analog output but now a LCD display is a new option. The LCD display supplies additional information locally such as totalization, alarm signals and the ability to make parameter changes. The changes can be made by removing the housing cover which is possible in a non-hazardous area. But in a hazardous area the display can be accessed with the cover in place using a supplied magnet.

Improved HART Transmitter, FOUNDATION™ Fieldbus and Alarm Option

The transmitter and alarm options can be used in applications from -198°C to +420°C (-325°F to +788°F). Every transmitter has HART Revision 7 capability. The transmitter and alarm options will have worldwide approvals including CSA (North America), ATEX (Europe), KOSHA (Korea), NEPSI (China) and TR CU (Custom Union including Russia). The alarm function has a safety certification of SIL 2. This option can be used in the toughest applications including safety systems.

Product Specifications

		MT3809	MT3809 ELF	MT3810	TFE Lined
Measuring Range		See Capacity Tables			
Rangeability		10:1 (most sizes)			
Metering Tube	Standard	316/316L (dual certified stainless steel)			Tefzel® Lined 316/316L (dual certified stainless steel)
	Premium	Alloy 625, Hastelloy® C, Titanium Gr. II	Monel® K-500, Hastelloy C	-	-
Flanges and End Fittings	Standard	316/316L (dual certified stainless steel)		316/316L (dual certified stainless steel)	Tefzel Lined 316/316L (dual certified stainless steel)
	Premium	Alloy 625, Hastelloy C, Titanium Gr. II		-	-
Accuracy		2%, 1%, VDI/VDE class 2.5, 1.6	5%, 3%, VDI/VDE class 4, 2.5	5%, VDI/VDE class 6	2%, VDI/VDE class 2.5
Repeatability		0.25% Full Scale	1% Full Scale	0.25% Full Scale	0.25% Full Scale
Scale type / material		Dark increments with white background / Aluminum			
Installation orientation and location		Vertical (within 5% of true-vertical), bottom inlet, top outlet. Do not locate in proximity of other magnetic interfering components.			
Connections	Flanged:	Weldneck flanges			Slip on flanges
	Equivalent - to ANSI B16.5*	ANSI ½" TO 4" 150# RF; ½" to 2" 900/1500# RF/RTJ; ½" to 2" 2500# RTJ	ANSI ½" TO 4" 150# RF; ½" to 2" 900/1500# RF/RTJ; ½" to 2" 2500# RTJ	ANSI 1/2" to 2" 150# RF to 300# RF	ANSI 1/2" to 2" 150# RF to 300# RF
	- DIN 2527/ EN 1092-1	DIN PN 40			
	- Flange finish	3.2 - 6.3 Ra			
	Threaded female	1/2" to 2"NPT/Rc-Female	1/2" NPT/Rc-Female	1/2" to 2" NPT-Female	-
	Threaded male	1" to 2-1/2" NPT-Male	1" NPT-Male	-	-
O-ring material	Flanged	None	Kalrez® 4079	None	
	Threaded male	None		-	-
	Threaded female std	Viton® or Teflon®		Viton or Teflon	-
	Threaded female high pressure 2500lbs	Viton Shore 90 + Teflon back-up ring or Kalrez 3018 Shore 90 + Teflon back-up ring		-	-
Floats	Standard	316L stainless steel			Hastelloy C-276 (sizes 7,8) PVDF (sizes 10-13)
	Premium	Alloy 625, Hastelloy C, Titanium Gr. II	Monel K-500, Hastelloy C	-	-
Protection Category	Indicator only	IP66/67 NEMA 4X			
	Transmitter ALU	IP66/67 NEMA 4X**			
	Transmitter SS	IP66/67 NEMA 4X			
Indicator Housing & Cover material	Indicator only ALU	Die cast Aluminum (Alloy 380), epoxy paint, glass window			
	Transm/Alarm/HiTemp ALU	Die cast Aluminum (Alloy 380), epoxy paint, glass window			
	Indicator only SS	Cast 316L stainless steel, glass window			
	Transm/Alarm/HiTemp SS	Cast 316L stainless steel, 316 stainless steel hardware, glass window			
Pressure/Temperature		See Pressure/Temperature Tables			
Maximum Fluid Temperature		420°C/788°F (Refer to Temperature Tables)		300°C/570°F	150°C/270°F
Meter Dimensions		Refer to Product Dimension Figures			
Needle Control Valves & Flow Controllers		Valves - Sizes 7 - 12 / FCA Sizes 7,8	Valve/FCA Sizes 0-5	Valves - Sizes 7 - 12 / FCA Sizes 7,8	-
Product Approvals		Refer to Product Approvals Pages			
Transmitter	Current loop 4-20mA/HART®	Refer to Transmitter Section for detailed specifications on 4-20mA/HART-7 transmitter, Hi/Lo-alarm and pulse ouput - **Not Available 3810G**			
	FOUNDATION™ Fieldbus	Refer to FOUNDATION Fieldbus Section for detailed specifications on FOUNDATION Fieldbus transmitter, Hi/Lo-alarm and pulse ouput -**Not Available 3810G**			
Inductive Alarms		Refer to Inductive Alarm Section - **Not Available 3810G**			Refer to Inductive Alarm Section
Local Operator Interface (incl. LCD)		Refer to Temperature Tables			

* The product is designed in accordance with ASME B31.3. The following flange parameters comply with requirements of ASME B16.5

**The IS Alum. Housing for 3809G previously had IP64 Rating up until the November 2024 Upgrade to IP66/67 NEMA 4X

Pressure Rating
Nominal Pipe Size NPS
Diameter of Flange
No. of Bolts
Diameter of Bolts
Diameter of Bolt Holes
Bolt Circle

ELF Body/Float Stop/Float/Metering Tube Material Restrictions

ELF BODY MAT'L (#1)	METERING TUBE MAT'L (#6)	OUTLET FLOAT STOP MAT'L (#13)	FLOAT MAT'L (#14)*	INLET FLOAT STOP MAT'L (#17)
316 LSS	316SS	HASTELLOY C-276	316SS or TITANIUM GR2	316SS
HASTELLOY C-276	HASTELLOY C-276	HASTELLOY C-276	HASTELLOY C-276	HASTELLOY C-276
INCONEL 625	MONEL	HASTELLOY C-276	MONEL	MONEL
TITANIUM GR2	MONEL	HASTELLOY C-276	TITANIUM GR2	MONEL

***Note: Size 0 float is always TITANIUM GR2 FLOAT**

Model 3809 & 3810 General Purpose Indicator Housing with Threaded Female Connections mm [inches]

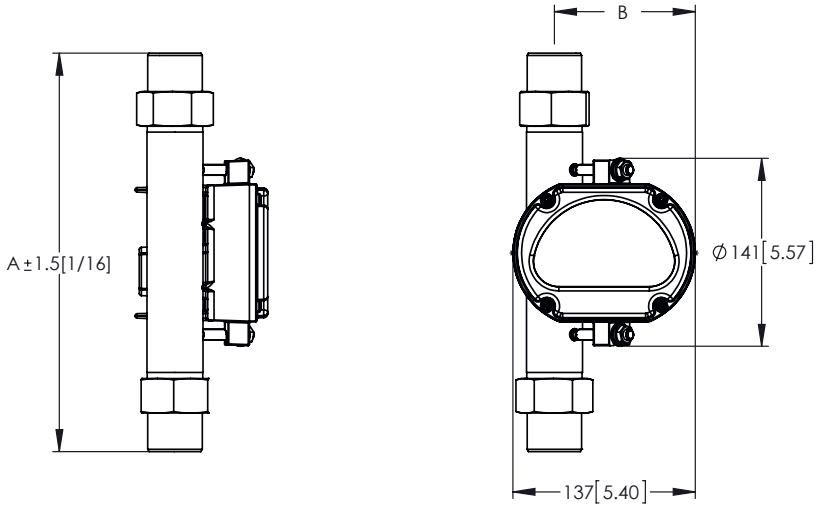

Model 3809 & 3810 General Purpose Indicator Housing with Flanged Connections mm [inches]

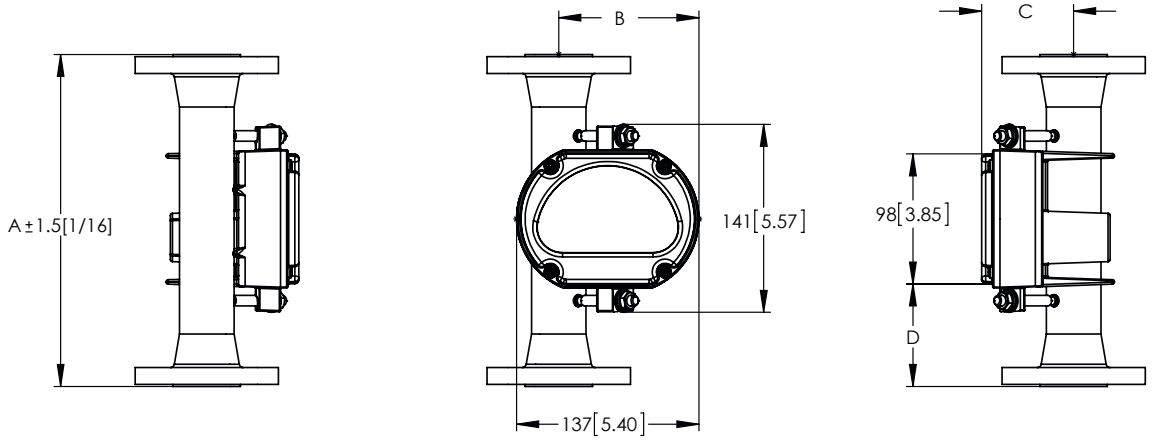

Meter Size	Connection	A	B	C	D	Weight (Approx.)*
0-5	1/2" Threaded Female	225 [8.85]	113 [4.45]	218 [8.58]	41 [1.61]	11.8 kg [26 lbs.]
	1" Threaded Male	200 [7.87]	114 [4.49]	218 [8.58]	28 [1.10]	11.8 kg [26 lbs.]
7 & 8	1/2" Threaded Female	225 [8.85]	113 [4.45]	218 [8.58]	41 [1.61]	11.8 kg [26 lbs.]
	3/4" Threaded Female	250 [9.84]	113 [4.45]	218 [8.58]	41 [1.61]	11.8 kg [26 lbs.]
	1" Threaded Male	200 [7.87]	114 [4.49]	218 [8.58]	28 [1.10]	11.8 kg [26 lbs.]
10	1" Threaded Female	300 [11.81]	120 [4.72]	218 [8.58]	78 [3.07]	13.6 kg [30 lbs.]
	1-1/2" Threaded Male	250 [9.84]	121 [4.76]	218 [8.58]	53 [2.09]	13.6 kg [30 lbs.]
12	1-1/2" Threaded Female	300 [11.81]	129 [5.08]	218 [8.58]	78 [3.07]	15.9 kg [35 lbs.]
	2-1/2" Threaded Male	250 [9.84]	131 [5.16]	218 [8.58]	53 [2.09]	15.9 kg [35 lbs.]
13	2" Threaded Female	300 [11.81]	135 [5.31]	218 [8.58]	78 [3.07]	16.8 kg [23 lbs.]
0-5	Flanged (ANSI, DIN and JIS)	250 [9.84]	113 [4.45]	218 [8.58]	53 [2.09]	13.2 kg [29 lbs.] - 15.6 kg [34 lbs.]
7 & 8		250 [9.84]	113 [4.45]	218 [8.58]	53 [2.09]	13.2 kg [29 lbs.] - 21 kg [46 lbs.]
10		250 [9.84]	120 [4.72]	218 [8.58]	53 [2.09]	16.8 kg [37 lbs.] - 23.6 kg [52 lbs.]
12		250 [9.84]	129 [5.08]	218 [8.58]	53 [2.09]	21.3 kg [47 lbs.] - 26.8 kg [59 lbs.]
13		250 [9.84]	135 [5.31]	218 [8.58]	53 [2.09]	23.1 kg [51 lbs.] - 37 kg [81 lbs.]
15		250 [9.84]	153 [6.02]	218 [8.58]	53 [2.09]	29 kg [64 lbs.] - 54 kg [119 lbs.]
16		350 [13.78]	168 [6.61]	218 [8.58]	103 [4.06]	46.7 kg [103 lbs.] - 67.7 kg [149 lbs.]

*Weights shown for aluminum indicator. Add 1.8 [4 lbs.] for steel indicator housing

Note: DIM A is 300mm for the below options:
Sizes 7/8 1.5 to 2" 600# RF
ELF 2" 300# RF
SIZE 10 2" 600# RF

Consult factory for 900/1500# & 2500# Flanged Meter Dimensions

Model 3809 Intrinsically Safe Indicator Housing with Threaded Female Connections mm [inches]

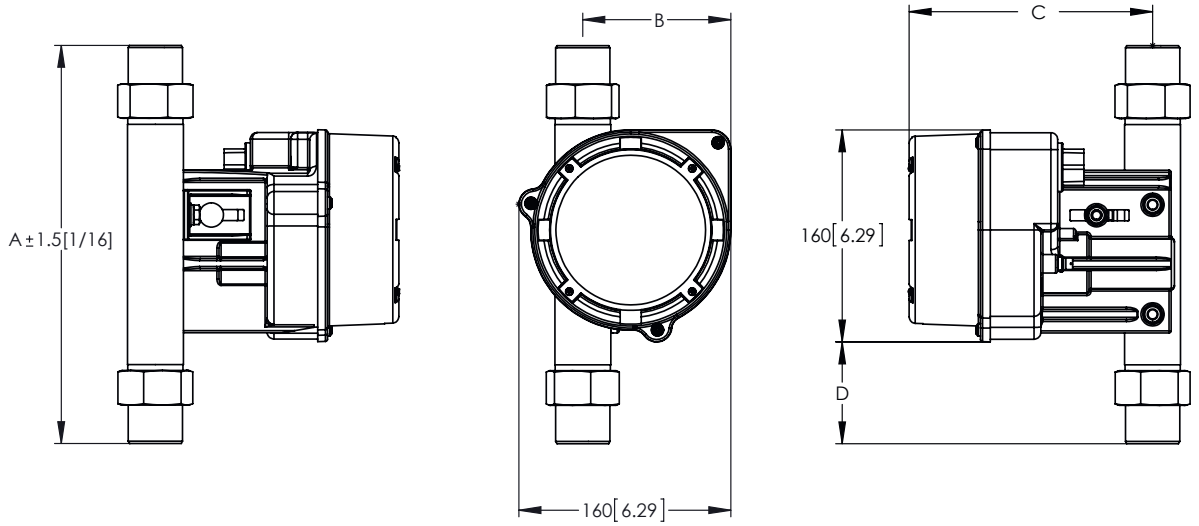

Model 3809 Intrinsically Safe Indicator Housing with Flanged Connections mm [inches]

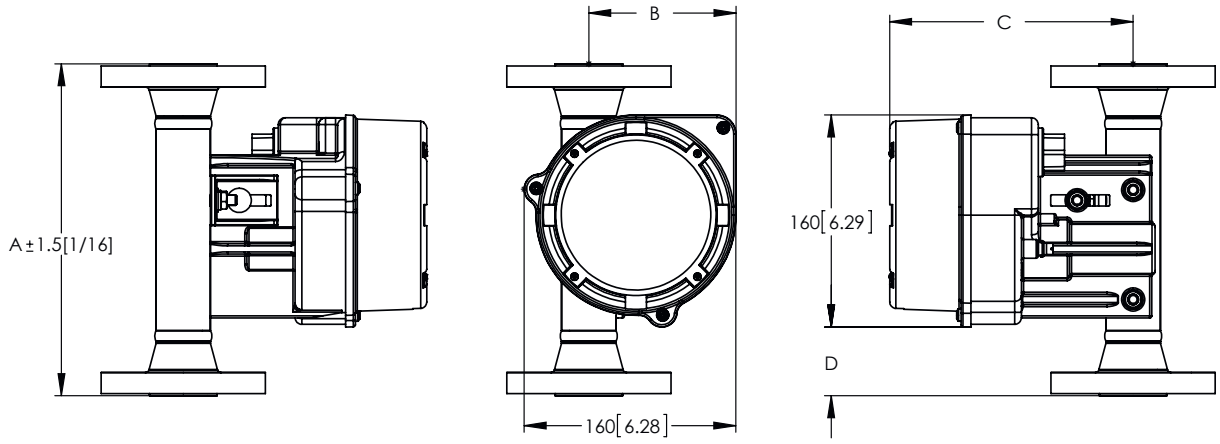

Meter Size	Connection	A	B	C	D	Weight (Approx.)*
0-5	1/2" Threaded Female	225 [8.85]	113 [4.45]	218 [8.58]	41 [1.61]	11.8 kg [26 lbs.]
	1" Threaded Male	200 [7.87]	114 [4.49]	218 [8.58]	28 [1.10]	11.8 kg [26 lbs.]
7 & 8	1/2" Threaded Female	225 [8.85]	113 [4.45]	218 [8.58]	41 [1.61]	11.8 kg [26 lbs.]
	3/4" Threaded Female	250 [9.84]	113 [4.45]	218 [8.58]	41 [1.61]	11.8 kg [26 lbs.]
	1" Threaded Male	200 [7.87]	114 [4.49]	218 [8.58]	28 [1.10]	11.8 kg [26 lbs.]
10	1" Threaded Female	300 [11.81]	120 [4.72]	218 [8.58]	78 [3.07]	13.6 kg [30 lbs.]
	1-1/2" Threaded Male	250 [9.84]	121 [4.76]	218 [8.58]	53 [2.09]	13.6 kg [30 lbs.]
12	1-1/2" Threaded Female	300 [11.81]	129 [5.08]	218 [8.58]	78 [3.07]	15.9 kg [35 lbs.]
	2-1/2" Threaded Male	250 [9.84]	131 [5.16]	218 [8.58]	53 [2.09]	15.9 kg [35 lbs.]
13	2" Threaded Female	300 [11.81]	135 [5.31]	218 [8.58]	78 [3.07]	16.8 kg [23 lbs.]
0-5	Flanged (ANSI, DIN and JIS)	250 [9.84]	113 [4.45]	218 [8.58]	53 [2.09]	13.2 kg [29 lbs.] - 15.6 kg [34 lbs.]
7 & 8		250 [9.84]	113 [4.45]	218 [8.58]	53 [2.09]	13.2 kg [29 lbs.] - 21 kg [46 lbs.]
10		250 [9.84]	120 [4.72]	218 [8.58]	53 [2.09]	16.8 kg [37 lbs.] - 23.6 kg [52 lbs.]
12		250 [9.84]	129 [5.08]	218 [8.58]	53 [2.09]	21.3 kg [47 lbs.] - 26.8 kg [59 lbs.]
13		250 [9.84]	135 [5.31]	218 [8.58]	53 [2.09]	23.1 kg [51 lbs.] - 37 kg [81 lbs.]
15		250 [9.84]	153 [6.02]	218 [8.58]	53 [2.09]	29 kg [64 lbs.] - 54 kg [119 lbs.]
16		350 [13.78]	168 [6.61]	218 [8.58]	103 [4.06]	46.7 kg [103 lbs.] - 67.7 kg [149 lbs.]

Note: DIM A is 300mm for the below options:
Sizes 7/8 1.5 to 2" 600# RF
ELF 2" 300# RF
SIZE 10 2" 600# RF

Consult factory for 900/1500# & 2500# Flanged Meter Dimensions

Model 3809 Explosion Proof Indicator Housing with Threaded Female Connections mm [inches]

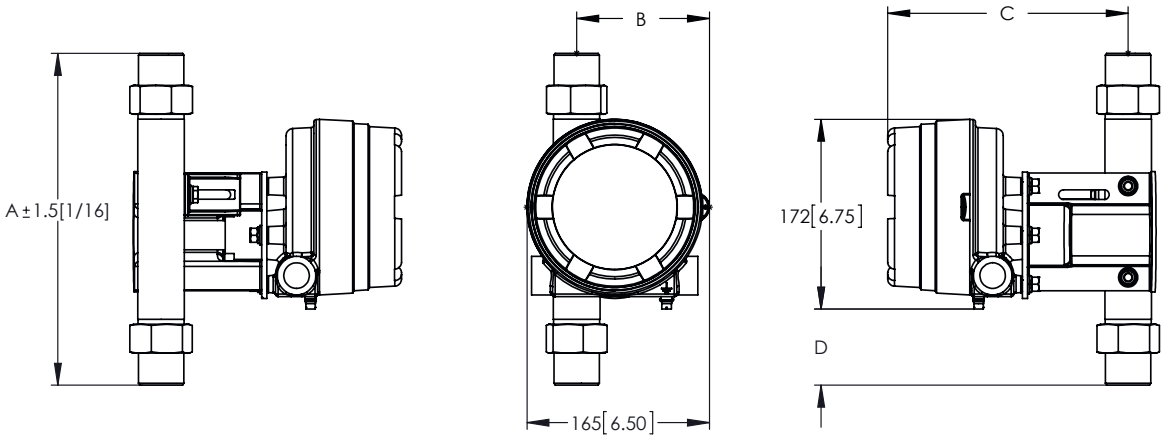

Model 3809 Explosion Proof Indicator Housing with Flanged Connections mm [inches]

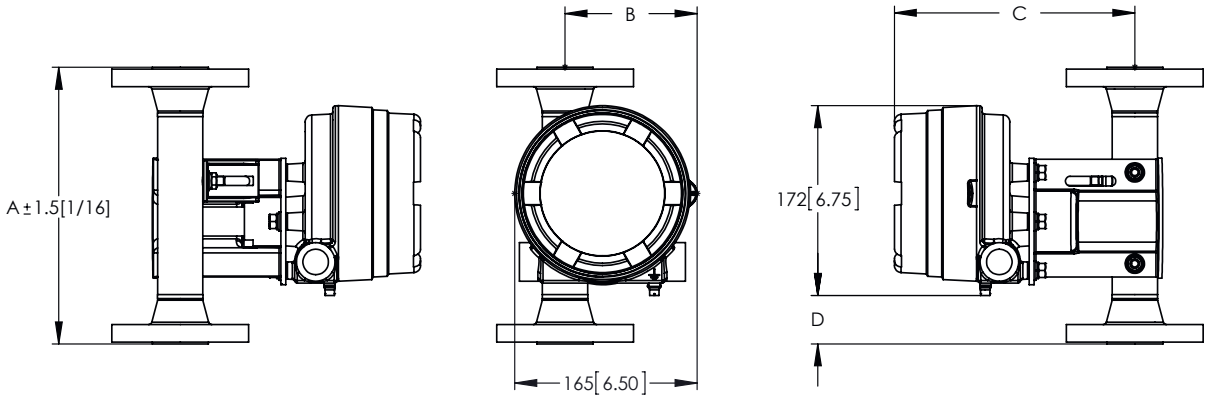

Meter Size	Connection	A	B	C	D	Weight (Approx.)*
0-5	1/2" Threaded Female	225 [8.85]	113 [4.45]	218 [8.58]	41 [1.61]	11.8 kg [26 lbs.]
	1" Threaded Male	200 [7.87]	114 [4.49]	218 [8.58]	28 [1.10]	11.8 kg [26 lbs.]
7 & 8	1/2" Threaded Female	225 [8.85]	113 [4.45]	218 [8.58]	41 [1.61]	11.8 kg [26 lbs.]
	3/4" Threaded Female	250 [9.84]	113 [4.45]	218 [8.58]	41 [1.61]	11.8 kg [26 lbs.]
	1" Threaded Male	200 [7.87]	114 [4.49]	218 [8.58]	28 [1.10]	11.8 kg [26 lbs.]
10	1" Threaded Female	300 [11.81]	120 [4.72]	218 [8.58]	78 [3.07]	13.6 kg [30 lbs.]
	1-1/2" Threaded Male	250 [9.84]	121 [4.76]	218 [8.58]	53 [2.09]	13.6 kg [30 lbs.]
12	1-1/2" Threaded Female	300 [11.81]	129 [5.08]	218 [8.58]	78 [3.07]	15.9 kg [35 lbs.]
	2-1/2" Threaded Male	250 [9.84]	131 [5.16]	218 [8.58]	53 [2.09]	15.9 kg [35 lbs.]
13	2" Threaded Female	300 [11.81]	135 [5.31]	218 [8.58]	78 [3.07]	16.8 kg [23 lbs.]
0-5	Flanged (ANSI, DIN and JIS)	250 [9.84]	113 [4.45]	218 [8.58]	53 [2.09]	13.2 kg [29 lbs.] - 15.6 kg [34 lbs.]
7 & 8		250 [9.84]	113 [4.45]	218 [8.58]	53 [2.09]	13.2 kg [29 lbs.] - 21 kg [46 lbs.]
10		250 [9.84]	120 [4.72]	218 [8.58]	53 [2.09]	16.8 kg [37 lbs.] - 23.6 kg [52 lbs.]
12		250 [9.84]	129 [5.08]	218 [8.58]	53 [2.09]	21.3 kg [47 lbs.] - 26.8 kg [59 lbs.]
13		250 [9.84]	135 [5.31]	218 [8.58]	53 [2.09]	23.1 kg [51 lbs.] - 37 kg [81 lbs.]
15		250 [9.84]	153 [6.02]	218 [8.58]	53 [2.09]	29 kg [64 lbs.] - 54 kg [119 lbs.]
16		350 [13.78]	168 [6.61]	218 [8.58]	103 [4.06]	46.7 kg [103 lbs.] - 67.7 kg [149 lbs.]

Note: DIM A is 300mm for the below options:
Sizes 7/8 1.5 to 2" 600# RF
ELF 2" 300# RF
SIZE 10 2" 600# RF

Consult factory for 900/1500# & 2500# Flanged Meter Dimensions

Pressure & Temperature Ratings, Flanged

Flanged - 150LBS, ANSI*

Temperature		316/316L		Titanium Gr.2		Alloy C-276/625	
°F	°C	psi	Bar	psi	Bar	psi	Bar
-325	-198	275	19.0			290	20.0
-75	-59	275	19.0	234	16.1	290	20.0
100	38	275	19.0	234	16.1	290	20.0
212	100	235	16.2	200	13.8	257	17.7
392	200	199	13.7	139	9.6	200	13.8
572	300	148	10.2	88	6.1	148	10.2
617	325			81	5.6		
752	400	94	6.5			94	6.5

Flanged - 600LBS, ANSI*

Temperature		316/316L		Titanium Gr.2		Alloy C-276/625	
°F	°C	psi	Bar	psi	Bar	psi	Bar
-325	-198	1440	99.3			1500	103.4
-75	-59	1440	99.3	1224	84.4	1500	103.4
100	38	1440	99.3	1224	84.4	1500	103.4
212	100	1224	84.4	1040	71.7	1494	103.0
392	200	1034	71.3	724	49.9	1403	96.7
572	300	917	63.2	550	37.9	1243	85.7
617	325			538	37.1		
752	400	854	58.9			1063	73.3

Flanged - PN16, EN-1092*

Temperature		316/316L		Titanium Gr.2		Alloy C-276/625	
°F	°C	psi	Bar	psi	Bar	psi	Bar
-325	-198	232	16.0			232	16.0
-75	-59	232	16.0	197	13.6	232	16.0
100	38	232	16.0	197	13.6	232	16.0
212	100	196	13.5	167	11.5	232	16.0
392	200	160	11.0	112	7.7	232	16.0
572	300	139	9.6	84	5.8	223	15.4
752	400	129	8.9			173	11.9

Flanged - 10K, JIS B2220*

Temperature		316/316L		Titanium Gr.2		Alloy C-276/625	
°F	°C	psi	Bar	psi	Bar	psi	Bar
-325	-198	203	14.0			203	14.0
-75	-59	203	14.0	173	11.9	203	14.0
100	38	203	14.0	173	11.9	203	14.0
212	100	203	14.0	173	11.9	203	14.0
392	200	174	12.0	122	8.4	174	12.0
572	300	145	10.0	87	6.0	145	10.0

Flanged - 300LBS, ANSI*

Temperature		316/316L		Titanium Gr.2		Alloy C-276/625	
°F	°C	psi	Bar	psi	Bar	psi	Bar
-325	-198	720	49.6			750	51.7
-75	-59	720	49.6	612	42.2	750	51.7
100	38	720	49.6	612	42.2	750	51.7
212	100	612	42.2	521	35.9	747	51.5
392	200	518	35.7	363	25.0	701	48.3
572	300	458	31.6	276	19.0	622	42.9
617	325			268	18.5		
752	400	426	29.4			529	36.5

*** Meter sizes 15 and 16 have a Minimum Temperature of -150°F/-101°C**

Flanged - 900/1500LBS, ANSI B16.5

Temperature		316/316L		Titanium Gr.2		Alloy C-276/625	
°F	°C	psi	Bar	psi	Bar	psi	Bar
-325	-198	3600	248.2			3751	258.2
-75	-59	3600	248.2	3060	211.0	3751	258.6
100	38	3600	248.2	3060	211.0	3751	258.6
212	100	3600	211.0	2602	179.4	3736	257.6
392	200	2586	178.3	1811	124.8	3506	241.7
572	300	2293	158.1	1376	94.9	3110	214.4
617	325			1343	92.6		
752	400	2135	147.2			2656	183.1

Flanged - 2500LBS, ANSI B16.5

Temperature		316/316L		Titanium Gr.2		Alloy C-276/625	
°F	°C	psi	Bar	psi	Bar	psi	Bar
-325	-198	6000	413.7			6250	430.9
-75	-59	6000	413.7	5100	351.6	6250	430.9
100	38	6000	413.7	5100	351.6	6250	430.9
212	100	5100	351.6	4335	298.9	6228	429.4
392	200	4311	297.2	3017	208.0	5842	402.8
572	300	3822	263.5	2239	158.1	5179	357.1
617	325			2239	154.4		
752	400	3558	245.3			4422	304.9

Flanged - PN40, EN-1092*

Temperature		316/316L		Titanium Gr.2		Alloy C-276/625	
°F	°C	psi	Bar	psi	Bar	psi	Bar
-325	-198	580	40.0			580	40.0
-75	-59	580	40.0	493	34.0	580	40.0
100	38	580	40.0	493	34.0	580	40.0
212	100	490	33.8	416	28.7	580	40.0
392	200	400	27.6	280	19.3	580	40.0
572	300	348	24.0	209	14.4	557	38.4
752	400	322	22.2			431	29.7

Flanged - 20K, JIS B2220*

Temperature		316/316L		Titanium Gr.2		Alloy C-276/625	
°F	°C	psi	Bar	psi	Bar	psi	Bar
-325	-198	493	34.0			493	34.0
-75	-59	493	34.0	419	28.9	493	34.0
100	38	493	34.0	419	28.9	493	34.0
212	100	493	34.0	419	28.9	493	34.0
392	200	450	31.0	315	21.7	450	31.0
572	300	421	29.0	252	17.4	421	29.0
752	400	334	23.0			334	23.0

Note: Flanged ELF O-ring is Kalrez 4079.

Pressure & Temperature Ratings, NPT Female

NPT - Female - Standard Design (Teflon O-rings)
316/316L

Temperature		#0-8		#10		#12		#13	
°F	°C	psi	Bar	psi	Bar	psi	Bar	psi	Bar
-58 to 100	-50 to 38	2567	177	2321	160	1929	133	1740	120
212	100	2190	151	1973	136	1653	114	1479	102
392	200	1842	127	1668	115	1392	96	1247	86
482	250	1726	119	1552	107	1291	89	1160	80

NPT - Female - ELF - 2500LBS Design
316/316L

Temperature		ELF	
°F	°C	psi	Bar
-58 to 100	-50 to 38	6000	414
212	100	5100	351.6
392	200	4311	297.2
572	300	3822	263.5

NPT - Female - 7-12 - 2500LBS Design
316/316L

Temperature		#7-12	
°F	°C	psi	Bar
-31 to 100	-35 to 38	6000	413.7
212	100	5100	351.6
392	200	4311	297.2
550	288	3822	263.5

NPT - Female - Standard Design (Teflon O-rings)
Titanium Gr. 2

Temperature		#7/8		#10		#12		#13	
°F	°C	psi	Bar	psi	Bar	psi	Bar	psi	Bar
-58 to 100	-50 to 38	2147	148	1929	133	1610	111	1450	100
212	100	1813	125	1639	113	1363	94	1233	85
392	200	1334	92	1204	83	1001	69	899	62
482	250	1160	80	1044	72	870	60	783	54

NPT - Female - ELF - 2500LBS Design
Titanium Gr. 2

Temperature		ELF	
°F	°C	psi	Bar
-58 to 100	-50 to 38	5100	352
212	100	4335	298.9
392	200	3017	208.0
572	300	2293	158.1

NPT - Female - 7-12 - 2500LBS Design
Titanium Gr. 2

Temperature		#7-12	
°F	°C	psi	Bar
-31 to 100	-35 to 38	5100	351.6
212	100	4335	298.9
392	200	3017	208.0
550	288	2293	158.1

NPT - Female - Standard Design (Teflon O-rings)
Hastelloy Alloy C-276

Temperature		#7/8		#10		#12		#13	
°F	°C	psi	Bar	psi	Bar	psi	Bar	psi	Bar
-58 to 100	-50 to 38	3510	242	3162	218	2640	182	2379	164
212	100	3162	218	2857	197	2379	164	2147	148
392	200	2756	190	2480	171	2074	143	1871	129
482	250	2582	178	2335	161	1944	134	1755	121

NPT - Female - ELF - 2500LBS Design
Alloy C-276/ Alloy 625

Temperature		ELF	
°F	°C	psi	Bar
-58 to 100	-50 to 38	6250	431
212	100	6228	429.4
392	200	5842	402.8
572	300	5179	357.1

NPT - Female - 7-12 - 2500LBS Design
Alloy C-276/ Alloy 625

Temperature		#7-12	
°F	°C	psi	Bar
-31 to 100	-35 to 38	6250	430.9
212	100	6228	429.4
392	200	5842	402.8
550	288	5179	357.1

Female ELF - 2500LBS Design: O-ring is Kalrez 4079
Female Sizes 7-12 - 2500LBS Design: O-ring is Kalrez 3018

NPT - Female - Standard Design (Teflon O-rings)
Inconel Alloy 625

Temperature		#7/8		#10		#12		#13	
°F	°C	psi	Bar	psi	Bar	psi	Bar	psi	Bar
-58 to 100	-50 to 38	4047	279	3640	251	3046	210	2741	189
212	100	4047	279	3640	251	3046	210	2741	189
392	200	3902	269	3510	242	2930	202	2640	182
482	250	3800	262	3423	236	2857	197	2567	177

Pressure & Temperature Ratings, NPT Male

NPT - Male - Standard Design							
316/316L							
Temperature		#7/8		#10		#12	
°F	°C	psi	Bar	psi	Bar	psi	Bar
-325	-198	4699	324	3785	261	3684	254
100	38	4699	324	3785	261	3684	254
212	100	4018	277	3234	223	3147	217
392	200	3379	233	2712	187	2654	183
572	300	3002	207	2408	166	2350	162
752	400	2785	192	2248	155	2190	151

NPT - Male - Standard Design							
Hastelloy Alloy C-276							
Temperature		#7/8		#10		#12	
°F	°C	psi	Bar	psi	Bar	psi	Bar
-325	-198	4989	344	5163	356	5033	347
100	38	4989	344	5163	356	5033	347
212	100	4511	311	4670	322	4540	313
392	200	3931	271	4061	280	3960	273
572	300	3466	239	3597	248	3495	241
752	400	3176	219	3292	227	3205	221

NPT - Male - Standard Design							
Titanium Gr. 2							
Temperature		#7/8		#10		#12	
°F	°C	psi	Bar	psi	Bar	psi	Bar
-75	-59	3046	210	3147	217	3075	212
100	38	3046	210	3147	217	3075	212
212	100	2596	179	2683	185	2611	180
392	200	1900	131	1973	136	1914	132
572	300	1450	100	1494	103	1450	100
617	325	1349	93	1407	97	1363	94

NPT - Male - Standard Design							
Inconel Alloy 625							
Temperature		#7/8		#10		#12	
°F	°C	psi	Bar	psi	Bar	psi	Bar
-325	-198	5758	397	5961	411	5802	400
100	38	5758	397	5961	411	5802	400
212	100	5758	397	5961	411	5802	400
392	200	5540	382	5729	395	5584	385
572	300	5279	364	5453	376	5323	367
752	400	5062	349	5236	361	5105	352

NPT - Male - ELF - 2500LBS Design*			
316/316L			
Temperature		ELF	
°F	°C	psi	Bar
-58 to 122	-50 to 50	6000	414
212	100	5100	351.6
392	200	4311	297.2
572	300	3822	263.5

NPT - Male - ELF - 2500LBS Design*			
Titanium Gr. 2			
Temperature		ELF	
°F	°C	psi	Bar
-58 to 122	-50 to 50	5100	352
212	100	4335	298.9
392	200	3017	208.0
572	300	2293	158.1

NPT - Male - ELF - 2500LBS Design*			
Alloy C-276/ Alloy 625			
Temperature		ELF	
°F	°C	psi	Bar
-58 to 122	-50 to 50	6250	431
212	100	6228	429.4
392	200	5842	402.8
572	300	5179	357.1

* ELF 2500# Design (Kalrez 4079)

Temperature Cut-off Tables

Meter with 316 SS Mechanical Indicator

	Process Temperature		Ambient Temperature	
Connection type	°C	°F	°C	°F
Flanged / MNPT	-198 to 420	-325 to 788	-55 to 75	-67 to 167
Threaded female	-50 to 300*	-58 to 572*	-55 to 75	-67 to 167
ETFE lined	-30 to 150	-22 to 302	-30 to 40	-22 to 104

Meter with Aluminum Mechanical Indicator

	Process Temperature		Ambient Temperature	
Connection type	°C	°F	°C	°F
Flanged / MNPT	-198 to 300	-325 to 572	-55 to 75	-67 to 167
Threaded female	-50 to 300*	-58 to 572*	-55 to 75	-67 to 167
ETFE lined	-30 to 150	-22 to 302	-30 to 40	-22 to 104

Ambient Temperatures with Electrical Components

Option	°C	°F
Transmitter	-40 to 70	-40 to 158
Transmitter w/display	-20 to 70	-4 to 158
Inductive switches	-40 to 70	-40 to 158

Insulation required when process temperatures are greater than 300°C/572°F.
Refer to Instruction Manual for details

Meter with Electrical Components - Ambient Temperature 30°C / 86°F

	Process Temperature	
Connection type	°C	°F
Transmitter	-198 to 420	-325 to 788
Transmitter w/display	-198 to 420	-325 to 788
Inductive switches	-198 to 420	-325 to 788

Meter with Electrical Components - Ambient Temperature 60°C / 140°F

	Process Temperature	
Connection type	°C	°F
Transmitter	-198 to 200	-325 to 392
Transmitter w/display	-198 to 175	-325 to 350
Inductive switches	-198 to 200	-325 to 392

*

Elastomer Materials	Minimum Temperature		Maximum Temperature	
	°F	°C	°F	°C
Kalrez 4079	-58	-50	572	300
Kalrez 3018	-31	-35	550	288
Teflon PTFE	-58	-50	482	250
Viton A	5	-15	400	204
Teflex (Viton core, FEP jacket)	5	-15	400	204

Flow Capacities, Pressure Drop and Viscosity Immunity Ceiling Values

Meter type	Meter size	Connection size DIN (mm)	Connection size ANSI (inch)	Float code	Float material	water[3] max volume flow	water[3] unit	water[3] max volume flow	water[3] unit	air[1,2] max volume flow	air[1,2] unit	air[1,2] max volume flow	air[1,2] unit	Pressure drop mbar	Pressure drop inches WC	VIC cSt	Max visc. cSt	PED category
MT3809 ELF	0	15	1/2"	0	Titanium	0.96	l/h	0.25	gph	1.6	scfh	44	l_n/h	12	5	1	5	SEP
	1				SS316	1.3		0.34		2.1		59		12	5	1	10	SEP
	2					3.6		0.96		4.9		130		12	5	1	20	SEP
	3					10		2.8		12		350		12	5	1	35	SEP
	4					21		5.5		23		650		32	13	1	70	SEP
	5					42		11		53		1400		38	15	1	100	SEP
MT3809 / MT3810	7			A		25		0.11	gpm	0.49	scfm	0.8	m_n^3/h	30	13	1	40	SEP
				B[4]		65		0.28		1.2		2.1		30	13	1	20	SEP
				C		130		0.59		2.4		3.9		30	13	1	120	SEP
				D[4]		200		0.88		3.7		6.1		35	15	1	20	SEP
	8			A		250		1.1		5.2		8.5		45	19	2	250	SEP
				B		400		1.7		7.7		12		55	23	1	180	SEP
				C		650		2.8		11		19		60	25	2	475	SEP
				D		1000		4.4		21		35		130	53	1.5	250	SEP
	10	25	1"	A		1200		5.2		19		31		60	25	5	300	CAT I, II or III
				B		1500		6.6		31		51		70	29	1.5	300	CAT I, II or III
				C		2400		10		41		68		85	35	7	300	CAT I, II or III
				D		3500		15		65		100		155	63	4	300	CAT I, II or III
	12	40	1-1/2"	A		4000		17		67		100		50	21	50	300	CAT I, II or III
				B		6000		26		95		150		60	25	30	300	CAT I, II or III
				C		8000		35		150		240		150	61	2	300	CAT I, II or III
				D		10000		46		210		340		300	121	2	300	CAT I, II or III
	13	50	2"	A		6500		28		100		160		50	21	50	300	CAT I, II or III
				B		9500		41		160		260		60	25	50	300	CAT I, II or III
				C		12000		55		200		330		100	41	2.5	300	CAT I, II or III
				D		20000		88		390		650		300	121	1	300	CAT I, II or III
	15	80	3"	A		20000		88		390		640		110	45	8	300	CAT I, II or III
				B		30000		130		550		900		140	57	7	300	CAT I, II or III
				C		40000		170		750		1200		280	113	5	300	CAT I, II or III
	16	100	4"	A		49000		210		N/A		N/A		160	65	15	300	CAT I, II or III
				B		70000		300		N/A		N/A		210	85	10	300	CAT I, II or III
				C		100000		440		N/A		N/A		300	121	5	300	CAT I, II or III
MT3809 TFE Lined[5]	7	15	1/2"	A	Hastel-C	110		0.48		2.2		3.7		25	11	1	2	SEP
				B		170		0.75		3.5		5.8		50	21	1	2	SEP
	8			A		250		1.1		5.1		8.3		30	13	1	2	SEP
				B		420		1.8		8.5		13		45	19	1	2	SEP
				C		500		2.2		9.9		16		40	17	1	2	SEP
				D		850		3.7		18		30		130	53	1	2	SEP
	10	25	1"	A	PVDF	1400		6.2		27		45		45	19	2	3	CAT I, II or III
				B		2000		8.8		39		63		106	43	2	3	CAT I, II or III
				C		2400		10		47		77		90	37	2	3	CAT I, II or III
				D		3000		13		58		95		130	53	2	3	CAT I, II or III
	12	40	1-1/2"	A		3000		13		58		95		50	21	2	3	CAT I, II or III
				B		4000		18		73		120		75	31	2	3	CAT I, II or III
				C		5000		22		94		150		85	35	2	3	CAT I, II or III
				D		6000		26		110		180		120	49	2	3	CAT I, II or III
	13	50	2"	A		6000		26		110		180		95	39	2	3	CAT I, II or III
				B		8000		35		150		250		125	51	2	3	CAT I, II or III
				C		12000		53		220		370		200	81	2	3	CAT I, II or III
				D		15000		66		280		470		225	91	2	3	CAT I, II or III

[1] Air flows in scfm or scfh are given at 70°F and 14.7 psia

[2] Air flows in m_n^3/h or ln/h are given at 0°C and 1,013 bar(a)

[3] Water flows in l/h, gph and gpm are given at 70°F

[4] Minimum operating pressure required 7 psig / 0.48 bar

[5] For TFE lined gas applications operating pressure must be greater than 29 psia / 2 bar(a)

4-20mA w/ HART Transmitter, Alarms, Display & Pulse Output

Design Features

- 4-20 mA analog output for flowrate
- Bell-202 modulated HART digital communication over the 4-20 mA signal
- Current loop powered 2-wire connection
- User selectable 0% and 100% analog output ranges with optional smoothing
- Flexible (mix & match) units of measure for flowrates, totals, temperatures, densities, etc.
- Two flow totalizers: Resettable and inventory totalization
- User configurable, scalable pulse output for various engineering units
- Hi- and Lo-flow alarm output

Description

The 4-20 mA with HART transmitter is a compact microprocessor device designed to interface directly with the Model MT3809. This transmitter includes a Hi- and Lo alarm switch output and a pulse output.
The HART digital communication signals are superimposed on top of the 4-20 mA signal, allowing communication of more than just the process variable.
The transmitter is HART-programmable or for numerous variables such as flow rate, totalization, calibration factors, and high-low alarm parameters. It is programmable with easy-to-use hand held configurators. Prior to shipment, commonly used default values are programmed by Brooks to ensure ease of operation and quick startup. However, parameters may be reprogrammed by the user if needed. Flow rate information may be viewed locally at the meter scale, LCD display or displayed remotely.

Power supply voltage	21 to 30 Vdc: (2-wire current loop transmitter)
Loop current / current consumption range	3.8 to 22.0 mA.
Hi- and Lo-alarm outputs	Open collector alarm output Optically isolated outputs assignable to alarms. • Max. off-state voltage: 30 Vdc • Max. off-state current: 0,05 mA • Max. on-state voltage: 1.2 Vdc • Max. on-state current: 20 mA
Pulse Output	Optically isolated. Scalable to a variety of engineering unit systems (pulses per liter, gallons, etc.). • Range: 1 Hz to 1 kHz • Max. off-state voltage: 30 Vdc • Max. off-state current: 0.05 mA • Max. on-state voltage: 1.2 Vdc • Max. on-state current: 20 mA
Temperature Specification	See Temperature Cut-off Table
Electrical Connector	M20 x 1,5 according to ISO (1/2" NPT, 3/4” NPT (F) or cable gland optional) • Stainless steel cable gland cable diameter range 4-12 mm (Aluminum housing) • Stainless steel cable gland cable diameter range 7-10.5 mm (SS housing)
Linearity	Less than 1% at max. current.
Temperature influence	Less than 0.04% per °C.
Voltage influence	Less than 0.002% / Vdc.
Load resistance influence	± 0.1% full scale.
HART Revision	HART-7

FOUNDATION Fieldbus Transmitter, with Alarms, Display & Pulse Output

Design Features

- FOUNDATION™ Fieldbus digital communication network interface
- Ease of wiring and installation with a single 2-wire bus connection
- Powered over 2-wire FOUNDATION™ Fieldbus connection
- Flexible (mix & match) units of measure for flowrates, totals,temperatures, densities, etc.
- Two flow totalizers: Resettable and inventory totalization
- User configurable, scalable pulse output for various engineering units
- Hi- and Lo-flow alarm output

Description

The FOUNDATION™ Fieldbus transmitter is a compact microprocessor device designed to interface directly with the Model MT3809. The transmitter communicates over the 2-wire network per the international FOUNDATION™ Fieldbus standard for access to numerous variables such as flow rate, totalization, calibration factors, and high-low alarm parameters.

Power supply voltage	9-32Vdc
Power supply protection	Protected against reverse polarity
Current consumption	12 mA Entire transmitter is powered from 2-wire bus
Hi- and Lo-alarm outputs	Open collector alarm output Optically isolated outputs assignable to alarms. • Max. off-state voltage: 30 Vdc • Max. off-state current: 0,05 mA • Max. on-state voltage: 1.2 Vdc • Max. on-state current: 20 mA
Pulse Output	Optically isolated. Scalable to a variety of engineering unit systems (pulses per liter, gallons, etc.). • Range: 1 Hz to 1 kHz • Max. off-state voltage: 30 Vdc • Max. off-state current: 0.05 mA • Max. on-state voltage: 1.2 Vdc • Max. on-state current: 20 mA
Temperature Specification	See Temperature Cut-off Table
Electrical Connector	M20 x 1,5 according to ISO (1/2" NPT, 3/4” NPT (F) or cable gland optional) • Stainless steel cable gland cable diameter range 4-12 mm (Aluminum housing) • Stainless steel cable gland cable diameter range 7-10.5 mm (SS housing)
Linearity	Less than 1%
Temperature Influence	Less than 0.04% per °C
Voltage influence	Less than 0.002% / Vdc
FOUNDATION Fieldbus Revision	ITK6

Inductive Alarm Switches

Design Features
- 1 or 2 normally open inductive limit switches
- Optional intrinsically safe power supply/amplifier/relay unit
- For low or high limit signaling/switching
- Front adjustable
- Optional Relay Power Supply – recommended

Description
One or two electronic limit switches can be installed in the indicator housing to allow signaling or switching functions on a preset flow value. The limit switch operates as a slot initiator that is inductively actuated by a disc mounted on the pointer shaft. Any flow value can be used for setting the limit value by sliding the initiator along the indicator scale. Minimum setting distance between two limit switches is approximately 40% full scale. The position of the initiator also serves to visually indicate the signaling set value. Settings can be adjusted by removing the indicator cover, loosening, moving and retightening of the alarm indication needle, and replacement of the indicator front cover.

Power supply voltage	5 - 25 Vdc: (8 Vdc nominal)
Impedance	- Approximately 1 kohm with cam absent - Approximately 8 kohm with cam present
Ambient and process temperature	See Temperature Cut-off Table
Electrical Connector	M20 x 1,5 according to ISO (1/2" NPT, 3/4" NPT (F) or cable gland optional) • Stainless steel cable gland cable diameter range 4-12 mm (Aluminum housing) • Stainless steel cable gland cable diameter range 7-10.5 mm (SS housing)

Optional Valves, Flow Controllers and Electronic Features

Optional Valves and Flow Controllers
Needle valves and flow controllers may be externally piped into the inlet or outlet side of the instrument. Needle valves can be supplied up to size 12 1-1/2" maximum 10000 l/hr / 46 gpm water equivalent. Needle valves and flow controllers will be supplied separately with the flanged meter.

Optional Electronic Features
Electronic equipment available with the Model MT3809 includes:
- Current loop 4-20 mA/HART Transmitter with Alarms and Pulse Output
- FOUNDATION Fieldbus Transmitter with Alarms and Pulse Output
- Inductive Alarms; stand-alone or in combination with above transmitters

Refer to the table below for the model code nomenclature for the electronics options. All models are designed to be either intrinsically safe or explosion proof.

Nomenclature and Type Designation

MT3809	...	B	...
I-IV	XV		

XV	Electronics configuration	B, C	Indicator with inductive alarm, 1 or 2 switches
		D … L	Transmitter, 4 – 20 mA / Hart, with optionally: - pulse output - inductive alarm contact(s) - LOI or combinations thereof.
		M … U	Transmitter, FOUNDATION Fieldbus, with optionally: - pulse output - inductive alarm contact(s) - LOI or combinations thereof.

Product Approvals

Declarations	Mark	Meter Options: Mechanical	Meter Options: HART Transmitter	Meter Options: Foundation Fieldbus Transmitter	Meter Options: Inductive Alarm	Standards / Directives / Marking	Declaration / Certificate
EU Declaration of Conformity	CE		✓	✓	✓	EMC Directive (2014/30/EU)	Declaration
		✓	✓	✓	✓	RoHS Directive (2011/65/EU)	Declaration
		✓	✓	✓	✓	Pressure Equipment Directive (2014/68/EU)	Declaration
SIL Declaration					✓	IEC 61508-2: 2010	Declaration
NAMUR Declaration			✓			NAMUR NE21, NE43	Declaration
IP66/67			✓	✓	✓	EN-IEC 60079-0 and EN-IEC 60529 (Stainless Steel Enclosure)	DEKRA Certificate
IP64			✓	✓	✓	EN-IEC 60079-0 and EN-IEC 60529 (Aluminum Enclosure)	DEKRA Certificate
IP66/67			✓	✓	✓	IEC 60529 (Aluminum Enclosure)	DEKRA Certificate
IP66/67		✓				IEC 60529 (Stainless Steel or Aluminum Enclosure)	DEKRA Certificate
Explosion Safety "Flame Proof" For temperature limits, see Table: Process and ambient temperature limits Flame Proof / Ex-d	ATEX Ex		✓	✓	✓	II 2 G Ex db IIC T6...T1 Gb II 2 D Ex tb IIIC T85°C...T450°C Db	DEKRA 13ATEX0086X
						Ex db IIC T6...T1 Gb Ex tb IIIC T85°C...T450°C Db	IECEx DEK13.0027X
						Standards used for evaluation: (13ATEX0086X and IECEx DEK13.0027X) EN 60079-0:2012+A11:2013, EN 60079-1:2014, EN 60079-31:2014 IEC 60079-0:2011 mod + Cor.:2012 + Cor.:2013, IEC 60079-1:2014, IEC 60079-31:2013 **Special conditions for safe use:** For information regarding the dimension of the flameproof joints the manufacturer shall be contacted. **Electrical connections conditions:** For application in environments requiring EPL Gb the threaded entries of the enclosure shall be sealed with plugs, cable entry devices such as glands or conduit entry devices which are Ex db IIC Gb approved. For application in environments requiring EPL Db the threaded entries of the enclosure shall be sealed with plugs, cable entry devices such as glands or conduit entry devices which are Ex tb IIIC Db approved. For application in environments requiring EPL Gb or EPL Db, in case the optional surge protector is used, the surge protector shall be installed with a high strength locking compound on the mounting thread.	
Explosion Safety "Constructional Safety (c)" Non-Electrical / Mechanical ATEX	ATEX Ex	✓				II2G Ex h IIC T6...T3 Gb II2D Ex h IIIC T200°C Db -20°C ≤ Ta ≤ 70°C	MBID 022
						Special conditions for safe use: Enclosure contains glass & painted aluminum parts. If it is mounted in an area where the use of category 2G or 2D apparatus is required, it must be installed such that ignition source due to propagating brush discharge sparks are excluded. The actual maximum surface temperature of the equipment depends not on the equipment itself, but on operating conditions of the process fluid/gas flowing through the equipment. The equipment by itself does not generate heat. Due to this reason the temperature class is marked as a range. The maximum permitted ambient and process temperature limits can be found in the operating instructions. At start up especially for gas applications, ensure that the pressure is gradually increased through the piping system. A sudden pressure spike situation may result in a fast movement of the float within the VA flowmeter & the float may hit hard against the float stop. Supply grounding connection by the process connections or earthing terminal.	

Table continued on next page

Product Approvals (continued)

Declarations	Mark	Meter Options: Mechanical	Meter Options: HART Transmitter	Meter Options: Foundation Fieldbus Transmitter	Meter Options: Inductive Alarm	Standards / Directives / Marking	Declaration / Certificate
Explosion safety "Intrinsic Safety (ia)" "Increased Safety (ec)" "Enclosure Dust (tc)" For temperature limits, see Table: Process and ambient temperature limits Intrinsic Safety / Increased Safety / Enclosure dust	ATEX IECEX		✓	✓	✓		DEKRA 13ATEX0086X (ia) DEKRA 21ATEX0326X (ec & tc) IECEx DEK13.0027X

Option	Enclosure Type	M1	M2	M1 = Apparatus with Transmitter only M2 = Apparatus with Inductive Alarm
Unit without Digital Display	Aluminum	✓	✓	II 2 G Ex ia IIC T6…T4 Gb II 2 D Ex ia IIIC T85 °C…T135 °C Db
		✓		II 3 G Ex ec IIC T6…T4 Gc II 3 D Ex tc IIIC T85 °C…T135 °C Dc
			✓	II 3 G Ex ic IIC T6…T4 Gc II 3 D Ex ic IIIC T85 °C…T135 °C Dc
	Stainless Steel	✓	✓	II 1 G Ex ia IIC T6…T3 Ga II 2 D Ex ia IIIC T85 °C…T200 °C Db
		✓		II 3 G Ex ec IIC T6…T3 Gc II 3 D Ex tc IIIC T85 °C…T200 °C Dc
			✓	II 3 G Ex ic IIC T6…T3 Gc II 3 D Ex ic IIIC T85 °C…T200 °C Dc
	Stainless Steel High Temperature	✓	✓	II 1 G Ex ia IIC T6…T2 Ga II 2 D Ex ia IIIC T85 °C…T300 °C Db
		✓		II 3 G Ex ec IIC T6…T2 Gc II 3 D Ex tc IIIC T85 °C…T300 °C Dc
			✓	II 3 G Ex ic IIC T6…T2 Gc II 3 D Ex ic IIIC T85 °C…T300 °C Dc
Unit with Digital Display	Aluminum	✓	✓	II 2 G Ex ia IIC T4 Gb II 2 D Ex ia IIIC T135 °C Db
		✓		II 3 G Ex ec IIC T4 Gc II 3 D Ex tc IIIC T135 °C Dc
			✓	II 3 G Ex ic IIC T4 Gc II 3 D Ex ic IIIC T135 °C Dc
	Stainless Steel	✓	✓	II 1 G Ex ia IIC T4…T3 Ga II 2 D Ex ia IIIC T135 °C…T200 °C Db
		✓		II 3 G Ex ec IIC T4…T3 Gc II 3 D Ex tc IIIC T135 °C…T200 °C Dc
			✓	II 3 G Ex ic IIC T4…T3 Gc II 3 D Ex ic IIIC T135 °C…T200 °C Dc
	Stainless Steel High Temperature	✓	✓	II 1 G Ex ia IIC T4…T2 Ga II 2 D Ex ia IIIC T135 °C…T300 °C Db
		✓		II 3 G Ex ec IIC T4…T2 Gc II 3 D Ex tc IIIC T135 °C…T300 °C Dc
			✓	II 3 G Ex ic IIC T4…T2 Gc II 3 D Ex ic IIIC T135 °C…T300 °C Dc

Standards used for evaluation: (13ATEX0086X, 21ATEX0326X and IECEx DEK13.0027X)
EN 60079-0:2018, EN 60079-11:2012, EN 60079-7:2015, EN 60079-31:2014
IEC 60079-0:2017, IEC 60079-11:2011 + Cor.:2012, IEC 60079-7:2015, IEC 60079-31:2013

Special conditions for safe use:

- In case the aluminium housing is mounted in an area where the use of EPL Gb (Category 2 G) or EPL Gc (Category 3 G) apparatus is required, the transparent cover must be installed such, that ignition sources due to electrostatic discharge sparks are prevented.
- In case the aluminium housing or painted housing is mounted in an area where the use of EPL Db (Category 2 D) or EPL Dc (Category 3 D) apparatus is required, the transparent cover and the painted parts must be installed such, that danger of ignition due to propagating brush discharges are prevented.
- For application in environments requiring EPL Ga and the enclosure is made aluminium, it shall be installed in such a way that sparking as a result of impact or friction is excluded.
- For models marked with material code M, Titanium Grade II, the installation instructions contain the specification of the alloy, allowing the user determine the suitability of the equipment for the particular application.
- From the safety point of view the circuits shall be assumed to be connected to earth.
- On units with digital display the programming function through the LCD display shall only be done outside the hazardous area.
- Cable glands are factory installed by Brooks and the optional polyamide inserts from the cable gland manufacturer cannot be used.

Table continued on next page

Product Approvals (continued)

Declarations	Mark	Meter Options				Standards / Directives / Marking	Declaration / Certificate
		Mechanical	HART Transmitter	Foundation Fieldbus Transmitter	Inductive Alarm		
Explosion safety "Intrinsic Safety (ia)" "Increased Safety (ec)" "Enclosure Dust (tc)"	UL c UL us LISTED		✓		✓	Class I, Division 1, Groups A, B, C, and D; Class II, Division 1, Groups E, F, and G; Class III Hazardous Locations Class I, Division 2, Groups A, B, C, and D; Class II, Division 2, Groups F and G; Class III Hazardous Locations Class I, Zone 1, AEx ia IIC T2/T3/T4/T5/T6 Gb Zone 21, AEx ia IIIC T85°C/T100°C/T135°C/T200°C/T300°C Db Class I, Zone 2, AEx ec IIC T2/T3/T4/T5/T6 Gc Zone 22, AEx tc IIIC T85°C/T100°C/T135°C/T200°C/T300°C Dc For temperature limits, see Table: Process and ambient temperature limits Intrinsic Safety / Increased Safety / Enclosure dust	E73889
Explosion safety "Flame Proof"	CSA c us		✓	✓	✓	Ex d IIC T6 Gb / Class I, Div.1 Group A, B, C and D Ex tb IIIC T85 Db / Class II, Div.1, Groups E, F, and G Class I, Zone 1, AEx d IIC T6 Gb / Zone 21, AEx tb IIIC T85 Db For temperature limits, see Table: Process and ambient temperature limits Flame Proof / Ex-d	14.2628516
NEMA 4X - Watertight			✓	✓	✓	NEMA 250 (Stainless Steel Enclosure)	CSA Certificate 14.2628516
NEMA 4X - Watertight		✓				NEMA 250 (Stainless Steel or Aluminum Enclosure)	DEKRA Test Report
NEMA 4X - Watertight			✓	✓	✓	NEMA 250 (Aluminum Enclosure)	DEKRA Test Report
CRN		✓	✓	✓	✓	ASME 31.3	CRN Registration Number

Declarations	Mark	Meter Options				Standards / Directives / Marking	Declaration / Certificate
		Mechanical	HART Transmitter	Foundation Fieldbus Transmitter	Inductive Alarm		
Customs Union - Russia Declaration	EAC	✓	✓		✓	TR CU 032/2013 “On safety of the equipment operating under excessive pressure”	TC N RU Д-U.AУ04.B.05988
	EAC		✓		✓	Customs Union & Russia TR CU 012/2011 1 Ex d IIC «T6…T1» GbX : Ex tb IIIC «T85°C…T400°C» Db X	RU C- HU.ГБ08.B.00741
Explosion safety "Intrinsic Safety (ia)" "Non-sparking (nA)" "Enclosure Dust (tc)"	EAC		✓		✓	Customs Union & Russia TR CU 012/2011 Zone 1 / Zone2 - Intrinsic safety ia/ic, Zone 2 non-sparking (nA)	RU C- HU.ГБ08.B.00741
Explosion safety "Flame Proof"	NEPSI Ex NEPSI		✓		✓	Exd IIC T6..T1 Gb : Ex tb IIIC T85°C…T400°C Db	GYJ14.1304X
	CCOE		✓		✓	Exd IIC T6..T1 Gb : Ex tb IIIC T85°C…T400°C Db	CCEs P349406/1
	KOSHA		✓		✓	Exd IIC T6..T1 Gb : Ex tb IIIC T85°C…T400°C Db	15-AV4BO-0353
Explosion safety "Intrinsic Safety (ia)" "Non-sparking (nA)" "Enclosure Dust (tc)	NEPSI Ex NEPSI		✓		✓	Zone 1 - Intrinsic safety(ia), Zone 2 - non-sparking (nA/ic)	GYJ15.1039X GYJ15.1040X

Process and Ambient Temperature Limits

			Maximum Process Temperature (°C)					
		Temperature Class	T6	T5	T4	T3	T2	T1
Approval type	Meter type	Ambient Temperature (°C)						
Flame-proof / Ex-d CSA / ATEX/IECex	Flanged and Male Threaded versions	-40 to 32.5	85	100	135	200	300*	420*
		-40 to 47	85	100	135	200	300*	N/A
		-40 to 58	85	100	135	200	N/A	N/A
		-40 to 65	85	100	135	N/A	N/A	N/A
		-40 to 70	85	100	N/A	N/A	N/A	N/A
	ELF and Female Threaded versions	-40 to 47	85	100	135	200	300*	N/A
		-40 to 58	85	100	135	200	N/A	N/A
		-40 to 65	85	100	135	N/A	N/A	N/A
		-40 to 70	85	100	N/A	N/A	N/A	N/A
	ETFE Lines versions	-40 to 64	85	100	135	150	N/A	N/A
		-40 to 65	85	100	135	N/A	N/A	N/A
		-40 to 70	85	100	N/A	N/A	N/A	N/A
	NOTE	* For application with process temperature equal to or greater than +300 °C heat shield and custom installation required. Refer to installation manual for details.						

			Maximum Process Temperature (°C)					
		Meter Option	Without Digital Display			With or without Digital Display		
		Temperature Class	T6	T6	T5	T4	T3	T2
Approval type	Housing type	Ambient Temperature (°C)	Without Inductive Alarm	With Inductive Alarm	With or without Inductive Alarm	With or without Inductive Alarm	With or without Inductive Alarm	With or without Inductive Alarm
Intrinsic Safety / Increased Safety / Enclosure Dust ATEX/IECex	Aluminum	-40 to +35	85	85	100	135	N/A	N/A
		-40 to +40	85	85	100	126	N/A	N/A
		-40 to +45	85	85	100	115	N/A	N/A
		-40 to +50	85	85	100	104	N/A	N/A
		-40 to +55	85	84	94	94	N/A	N/A
		-40 to +60	84	76	84	84	N/A	N/A
		-40 to +65	76 **	69 **	76	76	N/A	N/A
		-40 to +70 *	69 **	N/A	69	69	N/A	N/A
	Stainless Steel	-40 to +40	85	85	100	135	200	N/A
		-40 to +45	85	85	100	135	194	N/A
		-40 to +50	85	85	100	135	167	N/A
		-40 to +55	85	85	100	135	138	N/A
		-40 to +60	85	85	100	110	110	N/A
		-40 to +65	85 **	69 **	86	86	86	N/A
		-40 to +70 *	69 **	N/A	69	69	69	N/A
	Stainless Steel High Temp	-40 to +35	85	85	100	135	200	300
		-40 to +40	85	85	100	135	200	267
		-40 to +45	85	85	100	135	200	221
		-40 to +50	85	85	100	135	182	182
		-40 to +55	85	85	100	135	149	149
		-40 to +60	85	85	100	119	119	119
		-40 to +65	85 **	69 **	91	91	91	91
		-40 to +70 *	69 **	N/A	69	69	69	69
	NOTE	* Maximum Ambient Temperature for Inductive alarm = +66 °C ** Not Applicable/Available for Foundation Field Transmitter. (Model code XV = M...U)						

Tables continued on next page

Process and Ambient Temperature Limits

			Maximum Process Temperature (°C)					
		Meter Option	Without Digital Display			With or Without Digital Display		
		Temperature Class	T6	T6	T5	T4	T3	T2
Approval Type	Housing Type	Ambient Temperature (°C)	Without Inductive Alarm	With Inductive Alarm	With or Without Inductive Alarm	With or Without Inductive Alarm	With or Without Inductive Alarm	With or Without Inductive Alarm
Intrinsic Safety / Increased Safety / Enclosure dust cULus	Aluminum	-40 to 40	85	85	100	126	N/A	N/A
		-40 to 45	85	85	100	115	N/A	N/A
		-40 to 50	85	85	100	104	N/A	N/A
		-40 to 55	85	84	94	94	N/A	N/A
		-40 to 60	84	76	84	84	N/A	N/A
		-40 to +65	76	69	76	76	N/A	N/A
		-50 to +70*	69	N/A	69	69	N/A	N/A
	Stainless Steel	-40 to 40	85	85	100	135	200	N/A
		-40 to 45	85	85	100	135	194	N/A
		-40 to 50	85	85	100	135	167	N/A
		-40 to 55	85	85	100	135	138	N/A
		-40 to 60	85	85	100	110	110	N/A
		-40 to +65	85	69	86	86	86	N/A
		-40 to +70*	69	N/A	69	69	69	N/A
	Stainless Steel High Temp	-40 to 40	85	85	100	135	200	267
		-40 to 45	85	85	100	135	200	221
		-40 to 50	85	85	100	135	182	182
		-40 to 55	85	85	100	135	149	149
		-40 to 60	85	85	100	119	119	119
		-40 to +65	85	69	91	91	91	91
		-40 to +70*	69	N/A	69	69	69	69
	NOTE *Maximum Ambient Temperature for Inductive alarm = +66 °C							

Approval Type	Housing Type	Ambient Temperature (°C)
ATEX - Zone 1 / Zone 2, Non-Electrical	Aluminum	-20 to 70
	Stainless Steel	-20 to 70

Electronics configuration	Function / signal	Ui,V	Ii, mA	Pi, mW	Ci, nF	Li, µH	Recommended Barrier #
4-20mA / HART	Signal 4-20mA (J1 terminals 12+ and 13-)	28	96	605	2,2	0.365	Stahl Type: 9260-13-11-10S Stahl Type : 9001/01-280-075-101
	Pulse output (J1 terminals 7+ and 8-)	10,6	19,1	51	≈0	≈0	Pepperl & Fuchs: KFA5-SR2-EX2.W KFA6-SR2-EX2.W
		10,5	13	34	≈0	≈0	Pepperl & Fuchs: KFD2-SR2-EX2.W
	Alarm circuits A (J1 terminals 1+ and 2-)	10,6	19,1	51	≈0	≈0	Pepperl & Fuchs: KFA5-SR2-EX2.W KFA6-SR2-EX2.W
		10,5	13	34	≈0	≈0	Pepperl & Fuchs: KFD2-SR2-EX2.W
	Alarm circuits B (J1 terminals 4+ and 5-)	10,6	19,1	51	≈0	≈0	Pepperl & Fuchs: KFA5-SR2-EX2.W KFA6-SR2-EX2.W
		10,5	13	34	≈0	≈0	Pepperl & Fuchs: KFD2-SR2-EX2.W
		Uo,V	**Io, mA**	**Po, mW**	**Co, µF**	**Lo, mH**	**Notes**
	Remote zero loop signal (J1 terminals 10+ and 11-)	28	2,83	80	0.083	44	

		Ui,V	Ii, mA	Pi, mW	Ci, nF	Li, mH	Recommended Barrier #
Foundation Fieldbus	FOUNDATION Fieldbus loop (J1 terminals 10+/11+ and 12-/13-)	24	380	5320	0	0	FISCO barrier
	Pulse output (J1 terminals 5+ and 6-)	10,6	19,1	51	≈0	≈0	Pepperl & Fuchs: KFA5-SR2-EX2.W KFA6-SR2-EX2.W
		10,5	13	34	≈0	≈0	Pepperl & Fuchs: KFD2-SR2-EX2.W
	Alarm circuits A (J1 terminals 1+ and 2-)	10,6	19,1	51	≈0	≈0	Pepperl & Fuchs: KFA5-SR2-EX2.W KFA6-SR2-EX2.W
	Alarm circuits B (J1 terminals 3+ and 4-)	10,6	19,1	51	≈0	≈0	Pepperl & Fuchs: KFA5-SR2-EX2.W KFA6-SR2-EX2.W
		Uo,V	**Io, mA**	**Po, mW**	**Co uF**	**Lo mH**	**Notes**
	Remote zero loop signal (J1 terminals 8+ and 9-)	8,03	0,81	6,5	8,4	1215	

		Ui,V	Ii, mA	Pi, mW	Ci, nF	Li, µH	Recommended Barrier #
Inductive Alarms	Inductive High Alarm circuits (terminals «+» and «-») – for connection of circuits Pepperl+Fuchs mod. SJ 3,5-SN type 2	10,6	19,1	51	30	100	Pepperl & Fuchs:KFA5-SR2-EX2.W or KFA6-SR2-EX2.W
	Inductive Low Alarm circuits (terminals «+» and «-») – for connection of circuits Pepperl+Fuchs mod. SJ 3,5-SN type 2	10,6	19,1	51	30	100	Pepperl & Fuchs:KFA5-SR2-EX2.W or KFA6-SR2-EX2.W

Code Pos.	Applicable for 3809	Applicable for 3810
I-IV	x	
		x
V	x	x
VI	x	x
	x	x
	x	x
	x	
	x	
	x	
	x	x
	x	x
	x	x
	x	
	x	
	x	
	x	
	x	
	x	
	x	
	x	
	x	
	x	
	x	
	x	
VII	x	x
	x	
	x	
	x	x
	x	
	x	
	x	
	x	
	x	
VIII & IX	x	
	x	
	x	
	x	
	x	
	x	
	x	x
	x	x
	x	x
	x	x
	x	x
	x	
	x	

BASE MODEL

	ORIENTATION Inlet	Outlet	Std Accuracy
3809	Vertical	Vertical	2% F.S. or 2.5 VDI
3810	Vertical	Vertical	5% F.S. or 6 VDI

MODEL REVISION

G Redesigned …..

MATERIAL & MATERIAL CERTIFICATION

A 316L SS Dual Cert
B 316L SS Dual Cert w/Material Certificate 3.1
C 316L SS Dual Cert w/Material Certificate 3.1 - CODE 5*
D 316L SS Dual Cert - E/TFE lined
E 316L SS Dual Cert - E/TFE lined w/Material Certificate 3.1
F 316L SS Dual Cert - E/TFE lined w/Material Certificate 3.1 - CODE 5*
G 316L SS Dual Cert - CRN
H 316L SS Dual Cert w/Material Certificate 3.1 - CRN
J 316L SS Dual Cert w/Material Certificate 3.1 - CODE 5* - CRN
K Hastelloy C-276 w/Material Certificate 3.1 - CODE 5*
L Hastelloy C-276 w/Material Certificate 3.1 - CODE 5* - CRN
M Inconel 625 w/Material Certificate 3.1 - CODE 5*
N Inconel 625 w/Material Certificate 3.1 - CODE 5* - CRN
P Titanium Grade II w/Material Certificate 3.1 - CODE 5*
Q Titanium Grade II w/Material Certificate 3.1 - CODE 5* - CRN
R 316L SS Dual Cert - Titanium Float
S 316L SS Dual Cert w/Material Certificate 3.1 - Titanium Float
T 316L SS Dual Cert w/Material Certificate 3.1 - CODE 5 - Titanium Float
U 316L SS Dual Cert - CRN - Titanium Float
V 316L SS Dual Cert w/Material Certificate 3.1 - CRN - Titanium Float
W 316L SS Dual Cert w/Material Certificate 3.1 - CODE 5 - CRN - Titanium Float

* Pressure bound material from Western Europe, Japan, Canada or USA.

** 3.1 Material certificate applies only to Pressure Bound components

CONSTRUCTION

A Flange RF with Std Connection Size
B Flange RF with Oversized Connection
C Flange RF with Connection 2 times the Std Size
D Threaded Female St'd
E Threaded Female High Pressure 2500LBS Design
F Threaded Male
G Threaded Female 3/4" NPT
H Flange RF with Connection 3 times the Std Size
J Flange RF with Connection 4 times the Std Size

METER and CONNECTION SIZE

		CONNECTION SIZES										
		3809G								3809G & 3810G	3809G	3810G
CODE	METER SIZE	Std Conn Sz WELD NECK FLANGED	Oversized Conn WELD NECK FLANGED	Connection 2x Std Size WELD NECK FLANGED	Connection 3x Std Size WELD NECK FLANGED	Connection 4x Std Size WELD NECK FLANGED	Lined Meter SLIP-ON FLANGED	THREADED FEMALE NPT - HI PRESSURE	THREADED MALE NPT	THREADED FEMALE - ST'D PRESSURE	THREADED FEMALE - ST'D PRESSURE	WELD NECK FLANGED
00	0	1/2"	3/4"	1"	1.5"	2"		1/2"	1"			
01	1	1/2"	3/4"	1"	1.5"	2"		1/2"	1"			
02	2	1/2"	3/4"	1"	1.5"	2"		1/2"	1"			
03	3	1/2"	3/4"	1"	1.5"	2"		1/2"	1"			
04	4	1/2"	3/4"	1"	1.5"	2"		1/2"	1"			
05	5	1/2"	3/4"	1"	1.5"	2"		1/2"	1"			
07	7	1/2"	3/4"	1"	1.5"	2"	1/2"	1/2"	1"	1/2"	3/4"	1/2"
08	8	1/2"	3/4"	1"	1.5"	2"	1/2"	1/2"	1"	1/2"	3/4"	1/2"
10	10	1"	1.5"	2"			1"	1"	1.5"	1"		1"
12	12	1.5"	2"				1.5"	1.5"	2.5"	1.5"		1.5"
13	13	2"	3"				2"			2"		2"
15	15	3"	4"									
16	16	4"										

Model Code Table continued on next page

Sample Model Code

I-IV	V	VI	VII	VIII & IX	X	XI	XII	XIII	XIV	XV	XVI	XVII	XVIII	XIX	XX
3809	G	A	B	02											

Code Pos.	Applicable for 3809	Applicable for 3810
X		
	x	
	x	
	x	
	x	
	x	
	x	
	x	
		x
		x
		x
		x
XI		
	x	x
	x	x
	x	x
	x	x
	x	
	x	x
	x	x
	x	
	x	x
	x	
	x	
	x	
	x	
	x	
XII		
	x	x
	x	x
	x	x
	x	
	x	
	x	

MAXIMUM FLOW (Based On Water At Standard Conditions for 316SS Meter)

CODE	3809G Unlined Meters						
	for Low Flow ELF Meter						
	Size 0	Size 1	Size 2	Size 3	Size 4	Size 5	
0	0.96 l/h	1.3 l/h	3.6 l/h	10 l/h	21 l/h	42 l/h	
	for larger Meter Sizes						
	Size 7	Size 8	Size 10	Size 12	Size 13	Size 15	Size 16
A	25 l/h	250 l/h	1200 l/h	4000 l/h	6500 l/h	20.000 l/h	49.000 l/h
B	65 l/h	400 l/h	1500 l/h	6000 l/h	9500 l/h	30.000 l/h	70.000 l/h
C	130 l/h	650 l/h	2400 l/h	8000 l/h	12.000 l/h	40.000 l/h	100.000 l/h
D	200 l/h	1000 l/h	3500 l/h	10.000 l/h	20.000 l/h		

CODE	3809G - E/TFE Lined Meters				
	Size 7	Size 8	Size 10	Size 12	Size 13
A	110 l/h	250 l/h	1400 l/h	3000 l/h	6000 l/h
B	170 l/h	420 l/h	2000 l/h	4000 l/h	8000 l/h
C		500 l/h	2400 l/h	5000 l/h	12.000 l/h
D		850 l/h	3000 l/h	6000 l/h	15.000 l/h

CODE	3810G				
	Size 7	Size 8	Size 10	Size 12	Size 13
A	25 l/h	250 l/h	1200 l/h	4000 l/h	6500 l/h
B	65 l/h	400 l/h	1500 l/h	6000 l/h	9500 l/h
C	130 l/h	650 l/h	2400 l/h	8000 l/h	12.000 l/h
D	200 l/h	1000 l/h	3500 l/h	10.500 l/h	20.000 l/h

CONNECTION TYPE

- **A** NPT-Female w/Viton O-Rings (High pressure 2500# design has Viton/Teflon O-rings)
- **B** NPT-Female w/Teflon O-Rings (High pressure 2500# design has Kalrez 3018/Teflon O-rings)
- **C** Rc-Female w/Viton O-Rings (High pressure 2500# design has Viton/Teflon O-rings)
- **D** Rc-Female w/Teflon O-Rings (High pressure 2500# design has Kalrez 3018/Teflon O-rings)
- **E** NPT-Male
- **F** ANSI 150LBS RF
- **G** ANSI 300LBS RF
- **H** ANSI 600LBS RF
- **J** DIN PN40 RF
- **K** JIS B2220 DIN 10K
- **L** JIS B2220 DIN 20K
- **M** ANSI 150LBS RF - Elbow Outlet
- **N** ANSI 300LBS RF - Elbow Outlet
- **P** ANSI 600LBS RF - Elbow Outlet
- **Q** ANSI 900/1500LBS RF
- **R** ANSI 900/1500LBS RTJ
- **S** ANSI 2500LBS RTJ

SCALE INSCRIPTION/FLUID

CODE	SCALE	FLUID
A	Single - % Scale / Direct	Liquid
B	Single - % Scale / Direct	Gas
C	Single - % Scale / Direct	Liquid , Hi Viscosity
D	Dual - %and/or Direct	Liquid
E	Dual - %and/or Direct	Gas
F	Dual - %and/or Direct	Liquid , Hi Viscosity

Model Code Table continued on next page

Sample Model Code

I-IV	V	VI	VII	VIII & IX	X	XI	XII	XIII	XIV	XV	XVI	XVII	XVIII	XIX	XX
3809	G	A	B	02	B	F	C								

Code Pos.	Applicable for 3809	Applicable for 3810	
XIII			**METER ACCURACY**
	x	x	**A** 5% Full Scale
	x		**B** 2% Full Scale
	x		**C** 1% Full Scale
		x	**D** 6 VDI
	x		**E** 2.5 VDI
	x		**F** 1.6 VDI
	x		**G** 4 VDI
	x		**H** 3% Full Scale
XIV			**INDICATOR CONFIGURATION**
	x	x	**1** Aluminum Housing
	x	x	**2** 316SS Housing
	x		**3** X-proof SS Housing
	x		**5** 316SS Housing, High Temperature Design
	x		**6** X-Proof SS Housing, High Temperature Design
	x		**8** Al - Housing - Shatterproof Window
	x		**9** SS - Housing - Shatterproof Window
XV			**ELECTRONICS CONFIGURATION**
	x	x	**A** Indicator only
	x		**B** Inductive Alarm, 1 Switch*
	x		**C** Inductive Alarm, 2 Switches*
	x		**D** Transmitter, 4 - 20 mA / HART compatible
	x		**E** Transmitter, 4 - 20 mA / HART compatible w/Pulse Output & Alarm Contacts
	x		**F** Transmitter, 4 - 20 mA / HART compatible w/ Inductive Alarm 1 Sw*
	x		**G** Transmitter, 4 - 20 mA / HART compatible w/ Inductive Alarm 2 Sw*
	x		**H** Transmitter, 4 - 20 mA / HART compatible + LOI (Digital Display)
	x		**J** Transmitter, 4 - 20 mA / HART compatible w/Pulse Output & Alarm Contacts + LOI (Digital Display)
	x		**K** Transmitter, 4 - 20 mA / HART compatible w/ Inductive Alarm 1 Sw + LOI (Digital Display)*
	x		**L** Transmitter, 4 - 20 mA / HART compatible w/ Inductive Alarm 2 Sw +LOI (Digital Display)*
	x		**M** Foundation Fieldbus Transmitter
	x		**N** Fieldbus Transmitter w/Pulse Output & Alarm Contacts
	x		**P** Fieldbus Transmitter w/Inductive Alarm 1 Sw*
	x		**Q** Fieldbus Transmitter w/Inductive Alarm 2 Sw*
	x		**R** Fieldbus Transmitter + LOI (Digital Display)
	x		**S** Fieldbus Transmitter w/Pulse & Alarm Contacts + LOI (Digital Display)
	x		**T** Fieldbus Transmitter w/Inductive Alarm 1 Sw + LOI (Digital Display)*
	x		**U** Fieldbus Transmitter w/Inductive Alarm 2 Sw + LOI (Digital Display)*
			*Relay Power Supply Recommended
XVI			**ELECTRICAL CONNECTION**
	x	x	**0** None
	x		**1** Cord Connector 8-11 mm
	x		**2** M20x1.5
	x		**3** 1/2" NPT-F
	x		**4** 3/4" NPT-F (X-Proof Housing Only)

Model Code Table continued on next page

Sample Model Code

I-IV	V	VI	VII	VIII & IX	X	XI	XII	XIII	XIV	XV	XVI	XVII	XVIII	XIX	XX
3809	G	A	B	02	B	F	C	C	3	E	4				

Code Pos.	Applicable for 3809	Applicable for 3810	
XVII			**CERTS (APPROVAL TYPE)**
	x	x	**0** None
	x		**A** Zone 2, Non-incendive/non-sparking (ATEX / IECEX)
	x		**B** Zone 1, Intrinsically Safe (ATEX / IECEX)
	x		**C** Zone 1, Flame-proof XP - IIC (ATEX / IECEX); Div 1 / Zone 1, Flame-proof XP (North American Approvals)
	x		**D** Nepsi - Zone 2, Non-incendive/non-sparking
	x		**E** Nepsi - Zone 1, Intrinsically Safe
	x		**F** Nepsi - Zone 1, Flame-proof XP - IIC
	x		**G** KOSHA - Zone 2, Non-incendive/non-sparking
	x		**H** KOSHA - Zone 1, Intrinsically Safe
	x		**J** KOSHA - Zone 1, Flame-proof XP - IIC
	x		**K** CCOE - Zone 2, Non-incendive/non-sparking
	x		**L** CCOE - Zone 1, Intrinsically Safe
	x		**M** CCOE - Zone 1, Flame-proof XP - IIC
	x		**N** TR CU Ex Zone 2, Non-incendive/non-sparking (Custom Union including Russia)
	x		**P** TR CU Ex Zone 1, Intrinsically Safe (Custom Union including Russia)
	x		**Q** TR CU Ex Zone 1, Flameproof XP - IIC (Custom Union including Russia)
	x		**R** TR CU Indicator only (Custom Union including Russia)
	x		**S** UL - Div 1 / Zone 1, Intrinsically Safe (4-20 mA transmitter options)
	x		**T** UL - Div 2 / Zone 2, Non-Incendive / Non-Sparking (all electronic options)
	x		**V** ATEX - Zone 1 / Zone 2, Non-Electrical
XVIII			**VALVE / FLOW CONTROLLER**
	x	x	**0** None
	x	x	**A** Valve on Inlet - Viton Seals
	x	x	**B** Valve on Inlet - Teflon(Low flow valve Kalrez/Teflon)
	x	x	**C** Valve on Outlet - Viton Seals
	x	x	**D** Valve on Outlet - Teflon(Low flow valve Kalrez/Teflon)
	x	x	**E** Std Press FLOW CONTROLLER on Inlet - Viton Seals
	x	x	**F** Std Press FLOW CONTROLLER on Inlet - Teflon/Kalrez Seals
	x	x	**G** High Press FLOW CONTROLLER on Inlet - Teflon/Kalrez Seals
	x	x	**H** Std Press FLOW CONTROLLER on Outlet - Viton Seals
	x	x	**J** Std Press FLOW CONTROLLER on Outlet - Teflon/Kalrez Seals
	x	x	**K** High Press FLOW CONTROLLER on Outlet - Teflon/Kalrez Seals
XIX			**PROCESSES with CERTIFICATES (Group 1)**
	x	x	**0** None
	x		**A** Positive Material Identification (PMI) - 3.1 (w/o Carbon)
	x		**B** Positive Alloy Material Identification (PAMI) - 3.1 (Carbon)
	x		**C** NACE MR0175/103 - 2.1
	x		**D** NACE MR0175/103 - 2.1 & PMI - 3.1 (w/o Carbon)
	x		**E** NACE MR0175/103 - 2.1 & PAMI - 3.1 (Carbon)
	x		**F** NACE MR0175/103 – 3.1
	x		**G** NACE MR0175/103 – 3.1 & PMI – 3.1 (w/o Carbon)
	x		**H** NACE MR0175/103 – 3.1 & PAMI – 3.1 (Carbon)
XX			**PROCESSES with CERTIFICATES (Group 2)**
	x	x	**0** None
	x		**A** Radiographic Examination Report 3.1
	x		**B** Liquid Dye-Penetrant Test Report 3.1
	x		**C** Radiographic Exam 3.1 & Liquid Dye-Penetrant Test 3.1

Note
2.1 = Declaration of Compliance (EN 10204)
3.1 = Inspection Certificate (EN 10204)
(for Pressure Bound & Wetted components)

Additional Services
1 Clean for Oxygen Service 2.1
2 Hazardous Location Certificate
3 Certificate of Conformance 2.1
4 International Calibration Certificate 3.1
5 Pressure Test Certificate 2.2
6 Commercial Clean

Notes: The CRN approved meters are designed per ASME 31.3, constructed using materials compliant with ASTM/ASME specification and welding according to ASME IX standard.

The CRN approvals are valid for standard model code option and special model code options based on approval granted to the pressure vessel design and no changes to the pressure vessel design.

Sample Model Code

I-IV	V	VI	VII	VIII & IX	X	XI	XII	XIII	XIV	XV	XVI	XVII	XVIII	XIX	XX
3809	G	A	B	02	B	F	C	C	3	E	4	C	0	A	B

Brooks is committed to assuring all of our customers receive the ideal flow solution for their application, along with outstanding service and support to back it up. We operate first class repair facilities located around the world to provide rapid response and support. Each location utilizes primary standard calibration equipment to ensure accuracy and reliability for repairs and recalibration and is certified by our local Weights and Measures Authorities and traceable to the relevant International Standards.

Visit www.BrooksInstrument.com to locate the service location nearest to you.

START-UP SERVICE AND IN-SITU CALIBRATION

Brooks Instrument can provide start-up service prior to operation when required. For some process applications, where ISO-9001 Quality Certification is important, it is mandatory to verify and/or (re)calibrate the products periodically. In many cases this service can be provided under in-situ conditions, and the results will be traceable to the relevant international quality standards.

CUSTOMER SEMINARS AND TRAINING

Brooks Instrument can provide customer seminars and dedicated training to engineers, end users, and maintenance persons. Please contact your nearest sales representative for more details. Due to Brooks Instrument's commitment to continuous improvement of our products, all specifications are subject to change without notice.

TRADEMARKS
Brooks .....Brooks Instrument, LLC
All other trademarks are the property of their respective owners.

Data-Sheet-MT3809G-EN/2026-06

Global Headquarters
Brooks Instrument
407 West Vine Street
Hatfield, PA
19440-0903 USA

Toll-Free (USA): 888-554-FLOW
T: 215-362-3500
BrooksAM@BrooksInstrument.com

A list of all Brooks Instrument locations and contact details can be found at www.BrooksInstrument.com

©Copyright 2026 Brooks Instrument, LLC All rights reserved. Printed in U.S.A.

BROOKS® INSTRUMENT
Beyond Measure