BROOKS® INSTRUMENT

Beyond Measure

GT1600 Series

Industrial, Glass Tube Variable Area Flow Meters (Rotameter) for Liquids & Gases

The GT1600 Series glass tube VA flow meters are a NEW family of meters with a rugged design for long-lasting performance with low and high-flow gas and liquid applications where process viewing is important. These versatile and economical meters are for general use in applications with moderate metering accuracy requirements — typical accuracy ranges are 1% to 10% full scale, depending on the model selected. They are ideal for purge type service, seal oil systems, bearing lubrication and cooling water indication.

The GT1600 Series flow meters are configurable to retrofit existing Brooks Instrument GT1000, GT1300 and Full-View® 1100 Series meters (models 1110, 1114, 1140, 1144).

Features	Benefits
316/316L dual certified stainless steel process fittings, 316 stainless steel frame, polycarbonate safety shield. Design compliant to ASME B31.1 & B31.3	Premium materials of construction ensure safety, indoor and outdoor durability, and a 180° viewing window
High and low flow alarms	Monitor critical flow conditions. Can be added at time of order or as add-on in the field
Device can be vertically rotated 360° for adjustable viewing angle	Easy installation and viewing at any angle
Flanged or threaded connections, available horizontal and vertical. Panel and wall mount options.	Meets a variety of current or new process connections and mounting options
Clean or replace tube and float without removal from process piping	Easy in-situ maintenance
Adjustable scale	Compensate for process variation
Optional integral needle valve	Minimizes connections reducing leak points

Product Specifications

Performance	
Flow Accuracy	Standard: ±10%, ± 5%, ±2% Full Scale, Class 2.5 acc VDI/VDE Optional: ±1% Full Scale, Class 1.6 acc VDI/VDE *10% and 5% accuracy options only available with R-8M-75-1 and R-10M-75-3 tubes **All other accuracy options are available for all other tubes excluding R-8M-75-1 and R-10M-75-3
Repeatability	≤ 0.5% Full Scale
Capacities and Pressure Drops	See Capacities
Scales	Transparant scale. Adjustable Nominal Lengths: 75mm, 127mm and 250mm Choice of direct reading units, millimeter or percentage of maximum flow with factor tag
Ambient Temperature Limits	-4°F to 125°F | -20°C to 52°C
Operating Fluid Temperature Limits	33 to 250°F | 1°C to 121°C
Mounting Options	In line Panel mount (see Dimensions) Wall mount (see Dimensions)

	NPT Threaded		Flanged ANSI 150# RF	
Process Connections				
	Horizontal IN / OUT		Horizontal IN / OUT	
	Vertical IN / OUT		Vertical IN / OUT	
	Horizontal IN / Vertical OUT		Horizontal IN / Vertical OUT	
	Vertical IN / Horizontal OUT		Vertical IN / Horizontal OUT	
Pressure Ratings	Maximum Operating Pressure at Fluid Temperature			
Tube Size	**Threaded Process Connections**		**Flanged Process Connections**	
	psi	bar	psi	bar
*02	500	34.5	240	16.5
*06	450	31.0	240	16.5
07	300	20.7	240	16.5
08	250	17.0	240	16.5
09	200	13.8	200	13.8
10	175	12.1	175	12.1
Materials of Construction				
Metering Tube (Wetted)	Borosilicate Glass			
Process Fittings (Wetted)	316/316L (Dual Certified Stainless Steel)			
Float (Wetted)	Sizes 2 & 6: Carboloy® or 316/316L (Dual Certified Stainless Steel)			
	Sizes 7 - 10: 316/316L (Dual Certified Stainless Steel)			
Float Stops (Wetted)	Teflon®			
O-Rings (Wetted)	Viton®, Buna-N, Kalrez®, EPDM			
Housing	316 Stainless Steel			
Window & Safety Shield	Polycarbonate with UV Inhibitor			
Hardware	316 Stainless Steel			
Alarms				
Tube Size 02 & 06	Inductive Sensor High / Low Alarm			
Tube Size 07 - 10	Reed Switch High / Low Alarm			
Hazardous Area Approvals	Zone 1 / Zone 2 (ATEX/IECex) - Gas/Dust Protection Method Ex m (No Barrier)			
	Div1 (UL) - Gas/Dust Protection Method I.S.			
Valve				
	Optional Integral Needle Valve			
Certifications				
	International Calibration Certificate			
	Material Certification to DIN 3.1			
	Declaration of Compliance 2.1 Oxygen Service			

*Pressure rating for tube sizes 02 & 06 are limited 20.7 bar (300 psi) when an alarm is included for threaded process connections.

⚠ WARNING

Glass metering tubes are designed for operation up to the maximum operating pressures and temperatures as specified herein. Due to the inherent brittle characteristics of glass and conditions beyond our control, tube breakage could result below specified operating conditions. Do not use glass tube meters with fluids that are toxic, or chemically react with glass such as water above 140°F (60°C), steam, alkalis, flourine, hydroflouric acid, or molten metal. Failure to heed warning can result in serious personal injury and/or damage to the equipment.

Product Specifications

Capacities

	Tube Size	Tube	Float	Full Scale - Water cc/min	l/h	Pressure Drop inch W.C./kPa	V.I.C. cSt	Full Scale - Air SLPM[1]	In/h[2]	Pressure Drop inch W.C./kPa	Alarm Type
127-Low Flow	Size 02	R-2-127-AAAAT	316SS	1.9	0.11	0.7 / 0.17	1.0	0.11	6.7	0.8 / 0.19	Inductive Sensor
			Carboloy	3.7	0.22	1.1 / 0.27	1.0	0.2	12	1.2 / 0.3	
		R-2-127-AAT	Carboloy	6.1	0.36	1.2 / 0.29	1.0	0.32	19	1.5 / 0.37	
		R-2-127-DT	316SS	16	1	0.9 / 0.22	1.0	0.71	42	1.0 / 0.24	
			Carboloy	28	1.7	1.5 / 0.38	1.0	1	63	1.7 / 0.42	
		R-2-127-AT	316SS	39	2.3	1.1 / 0.27	1.0	1.4	85	1.2 / 0.3	
			Carboloy	58	3.5	1.9 / 0.47	1.0	2	120	2.1 / 0.52	
		R-2-127-BT	316SS	110	6.8	1.8 / 0.45	1.0	3.9	230	2.0 / 0.21	
			Carboloy	170	10	3.0 / 0.75	1.0	5.7	340	3.3 / 0.83	
		R-2-127-CT	Carboloy	280	17	6.1 / 1.51	1.0	9.5	570	4.8 / 1.2	
	Size 06	R-6-127-AT	316SS	410	25	6.1 / 1.53	1.0	14	840	6.8 / 1.7	
			Carboloy	620	37	10.5 / 2.61	1.0	20	1200	11.6 / 2.9	
		R-6-127-BT	316SS	1000	65	30.1 / 7.5	1.0	35	2100	33.3 / 8.3	
			Carboloy	1500	95	57.8 / 14.4	1.0	49	2900	64.2 / 16	

	Tube Size	Tube	Float	GPM	l/h	Pressure Drop inch W.C./kPa	V.I.C. cSt	SCFM[1]	m^3n/h[2]	Pressure Drop inch W.C./kPa	Alarm Type
250-High Flow	Size 07	R-7M-25-1FT	7-XV-11A-A	0.48	100	8 / 2	1.0	1.8	3.1	10 / 2.5	Reed Switch
			7-XS-23-A	0.77	170	16 / 4.0	1.0	3.3 (5.7)*	5.5 (9.6)*	17 / 4.2	
	Size 08	R-8M-25-4FT	8-XV-8-A	1.00	240	5 / 1.5	3.7	4.4	7.5	5 / 1.3	
			8-XV-14-A	1.40	320	8 / 2	5.4	5.8	9.9	8 / 2	
			8-XV-31-A	2.00	460	16 / 4	7.0	8.1 (14)*	13.7 (24)*	17 / 4.3	
	Size 09	R-9M-25-3FT	9-XS-33-A	3.20	730	4 / 1	2.3	13	22	8 / 2	
			9-XV-87-A	3.90	890	14 / 3.5	17	16.1 (28)*	27.5 (48)*	16 / 4	
			9-XS-87-A	5.10	1100	18 / 4.5	3.5	20.7 (36)*	35.5 (62)*	19 / 4.8	
	Size 10	R-10M-25-3FT	10-XV-64-A	6.20	1400	12 / 3	15	25	43	14 / 3.5	
			10-XS-64-A	7.80	1700	16 / 4	3.7	32	54	18 / 4.5	
			10-XS-138-A	10.00	2400	30 / 7.5	5.5	45.9 (80)*	74.4 (130)*	36 / 9	
			10-XJ-238-A	21.00	4800	104 / 26	1.0	86.1 (150)*	154.6 (270)*	16 / 4	
127-High Flow	Size 07	R-7M-127-1FT	7-XV-11A-A	0.41	93	8 / 2	1.0	1.8	3	10 / 2.5	N/A
			7-XS-23-A	0.66	150	16 / 4.0	1.0	2.7 (4.7)*	4.6 (8.1)*	17 / 4.2	
	Size 08	R-8M-127-4FT	8-XV-8-A	0.99	220	5.0 / 1.25	3.7	4	6.8	6.0 / 1.5	
			8-XV-14-A	1.3	310	8.0 / 2	5.4	5.3	9	10 / 2.5	
			8-XV-31-A	1.7	400	24 / 6	7.0	6.3 (11)*	11.4 (20)*	28 / 7	
	Size 09	R-9M-127-4FT	9-XS-33-A	3.0	690	7.0 / 1.7	2.3	12	21	8.0 / 2.0	
			9-XV-87-A	3.6	830	14 / 3.5	17	14.9 (26)*	25.2 (44)*	16 / 4.0	
			9-XS-87-A	4.5	1000	17 / 4.2	3.5	18.4 (32)*	31.5 (55)*	20 / 5.0	
	Size 10	R-10M-127-3FT	10-XV-64-A	6	1300	9 / 2.25	15	24	41	10 / 2.5	
			10-XS-64-A	7.4	1600	12 / 3	3.7	30	52	13 / 3.25	
			10-XS-138-A	9.8	2200	29 / 7.25	5.5	39 (68)*	63 (110)*	33 / 8.25	
			10-XJ-238-A	20	4700	104 / 26	1.0	80.4 (140)*	143.2 (250)*	16 / 4	
075-High Flow	Size 08	R-8M-75-1	8-XV-8-A	0.82	180	8 / 2	N/A	3.3	5.6	9 / 2.25	
			8-RJ-10	1.5	340	9 / 2.25		6.3	10	11 / 2.7	
			8-RJ-23	2.4	540	13 / 3.25		9.9	16	15 / 3.7	
			8-RJ-30	3.1	710	19 / 4.8		13	22	22 / 5.5	
			8-RJ-39	4.7	1000	34 / 6		N/A			
	Size 10	R-10M-75-3	10-RJ-80	10	2200	18 / 4.5					
			10-RJ-180	21	4900	71 / 17.6					
			10-RJ-37	N/A				24	40	18 / 4.5	
			10-RJ-83					36	62	35 / 8.7	
			10-RJ-90					43	73	71 / 17.6	

Note (1): Air flow rates in standard units are at 70°F & 14.7 psia. Reference conditions 70°F 1 atm.
Note (2): Air flow rates in normal units are at 1.013 bar & 20°C. Reference conditions 20°C 1 atm.

*These codes require a back pressure of 30 psig / 2.069 bar. Flow rates in parenthesis are when this back pressure is applied.

Product Dimensions

Front View Threaded Connection

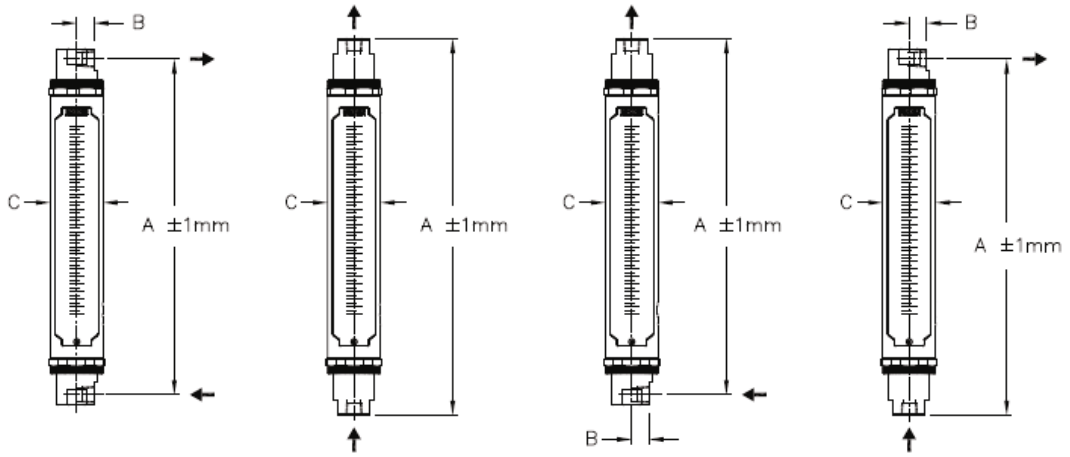

Front View Flanged Connection

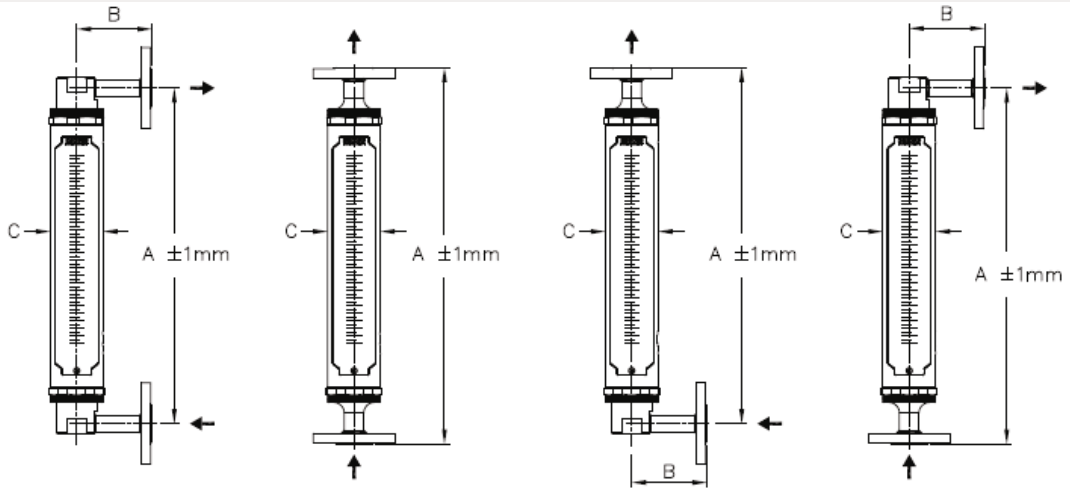

Back of Panel (Flush) Mounting
(Rectangular Panel Cut-Out + 4 Mtg. Holes)

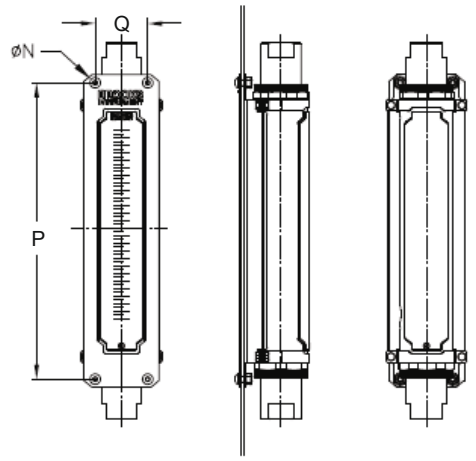

Front View Back View

Front of Panel (Wall) Mounting
(4 Mounting Holes)

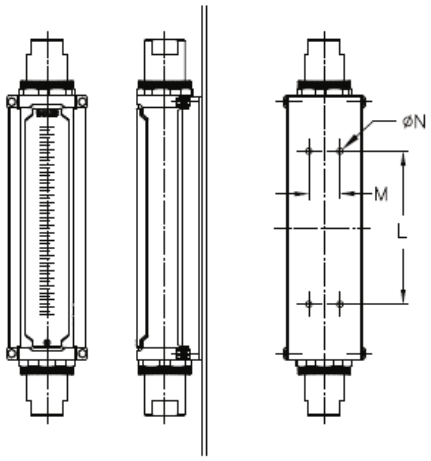

Front View Back View

Product Dimensions

Meter Type	Tube Size	Process Connection	Orientation H(orizontal) V(ertical)	Notes	Retro-fit	Model	Dimension															
							A		B		C		L		M		N		P		Q	
							inch	mm	inch	mm	inch	mm	inch	mm	inch	mm	inch	mm	inch	mm	inch	mm
127-Low Flow	Size 02 Size 06	NPT-F	H-IN / H-OUT	Standard Dimensions(3)	GT1000	1020	8.59	218.3	0.63	16.0	2.13	54.0	4.00	101.6	1.00	25.4	0.22	5.5	7.24	184	1.48	37.6
			V-IN / V-OUT			1024	9.84	250.0	-	-												
			H-IN / V-OUT			1026	9.22	234.1	0.63	16.0												
			V-IN / H-OUT			1027	9.22	234.1	0.63	16.0												
			H-IN / H-OUT	Retrofit Only(4)	Full-View	1110	8.59	218.3	0.63	16.0												
			V-IN / V-OUT			1114	9.63	244.5	-	-												
			H-IN / V-OUT			1140	9.11	231.4	0.63	16.0												
			V-IN / H-OUT			1144	9.11	231.4	0.63	16.0												
		Flanged 150lbs RF	H-IN / H-OUT	Standard Dimensions(3)	GT1000	1020	8.59	218.3	2.95	75.0												
			V-IN / V-OUT			1024	10.63	270.0	-	-												
			H-IN / V-OUT			1026	9.61	244.1	2.95	75.0												
			V-IN / H-OUT			1027	9.61	244.1	2.95	75.0												
			H-IN / H-OUT	Retrofit Only(4)	Full-View	1140	8.59	218.3	3.5	88.9												
			V-IN / V-OUT			1144	14.88	377.8	-	-												
			H-IN / V-OUT			1146	11.73	298.1	3.5	88.9												
			V-IN / H-OUT			1147	11.73	298.1	3.5	88.9												
250-High Flow	Size 07 Size 08 Size 09 Size 10	NPT-F	H-IN / H-OUT	Standard Dimensions(3)	GT1000	1020	17.50	444.5	0.83	21.0	2.97	75.5	8.00	203.2	1.63	41.3	0.35	9.0	15.49	393.5	2.74	69.7
			V-IN / V-OUT			1024	19.69	500.0	-	-												
			H-IN / V-OUT			1026	18.59	472.3	0.83	21.0												
			V-IN / H-OUT			1027	18.59	472.3	0.83	21.0												
			H-IN / H-OUT #7/8 H-IN / H-OUT #9/10	Retrofit Only(4)	Full-View	1110	16.50 17.50	419.1 444.5	0.83	21.0												
			V-IN / V-OUT #7/8 V-IN / V-OUT #9/10			1114	17.00 17.25	431.8 438.2	-	-												
			H-IN / V-OUT #7/8 H-IN / V-OUT #9/10			1116	16.75 17.38	425.5 441.3	0.83	21.0												
			V-IN / H-OUT #7/8 V-IN / H-OUT #9/10			1117	16.75 17.38	425.5 441.3	0.83	21.0												
			V-IN / V-OUT	Retrofit Only(4)	GT1307	1307	16.94	430.2	-	-												
		Flanged 150lbs RF	H-IN / H-OUT #7/8 H-IN / H-OUT #9/10	Standard Dimensions(3)	GT1000	1020	17.50	444.5	3.94 4.72	100.0 120.0												
			V-IN / V-OUT			1024	19.69	500.0	-	-												
			H-IN / V-OUT #7/8 H-IN / V-OUT #9/10			1026	18.59	472.3	3.94 4.72	100.0 120.0												
			V-IN / H-OUT #7/8 V-IN / H-OUT #9/10			1027	18.59	472.3	3.94 4.72	100.0 120.0												
			H-IN / H-OUT #7/8 H-IN / H-OUT #9/10	Retrofit Only(4)	Full-View	1140	16.5 17.50	419.1 444.5	3.50 4.00	88.9 101.6												
			H-IN / V-OUT #7/8 H-IN / V-OUT #9/10			1144	22.88 22.50	581.0 571.5	-	-												
			V-IN / H-OUT #7/8 H-IN / V-OUT #9/10			1146	19.69 20.00	500.0 508.0	3.50 4.00	88.9 101.6												
			V-IN / H-OUT #7/8 V-IN / H-OUT #9/10			1147	19.69 20.00	500.0 508.0	3.50 4.00	88.9 101.6												

Note (3): Standard dimension are for new installations.
Note (4): Retrofit dimensions are for replacement of GT10xx, GT130x and Full-View meters in existing installation. Not for use in new installations.

Meter Type	Tube Size	Process Connection	Orientation H(orizontal) V(ertical)	Notes	Retro-fit	Model	Dimension											
							A		B		C		L		M		N	
							inch	mm	inch	mm	inch	mm	inch	mm	inch	mm	inch	mm
127-High Flow	Size 07 Size 08 Size 09 Size 10	NPT-F	H-IN / H-OUT	Standard Dimensions(3)	---	-	12.31	312.7	0.83	21	2.97	75.5	N/A					
			V-IN / V-OUT			-	14.50	368.2	-	-								
			H-IN / V-OUT			-	13.41	340.5	0.83	21								
			V-IN / H-OUT			-	13.41	340.5	0.83	21								
			H-IN / H-OUT #7/8 H-IN / H-OUT #9/10	Retrofit Only(4)	Full-View	1110	11.50 12.50	292.1 317.5	0.83	21								
			V-IN / V-OUT #7/8 V-IN / V-OUT #9/10			1114	12.00 12.25	304.8 311.2	-	-								
			H-IN / V-OUT #7/8 H-IN / V-OUT #9/10			1116	11.75 12.38	298.5 314.3	0.83	21								
			V-IN / H-OUT #7/8 V-IN / H-OUT #9/10			1117	11.75 12.38	298.5 314.3	0.83	21								
			V-IN / V-OUT	Retrofit Only(4)	GT1306	1306	11.75	298.5	-	-								
		Flanged 150lbs RF	H-IN / H-OUT #7/8 H-IN / H-OUT #9/10	Standard Dimensions(3)	GT1000	-	12.31	312.7	3.94 4.72	100.0 120.0								
			V-IN / V-OUT #7/8 V-IN / V-OUT #9/10			-	14.50	368.2	-	-								
			H-IN / V-OUT #7/8 H-IN / V-OUT #9/10			-	13.41	340.5	3.94 4.72	100.0 120.0								
			V-IN / H-OUT #7/8 V-IN / H-OUT #9/10			-	13.41	340.5	3.94 4.72	100.0 120.0								
			H-IN / H-OUT #7/8 H-IN / H-OUT #9/10	Retrofit Only(4)	Full-View	1140	11.50 12.50	292.1 317.5	3.50 4.00	88.9 101.6								
			V-IN / V-OUT #7/8 V-IN / V-OUT #9/10			1144	17.88 17.50	454.0 444.5	-	-								
			H-IN / V-OUT #7/8 H-IN / V-OUT #9/10			1146	14.69 15.00	373.0 381.0	3.50 4.00	88.9 101.6								
			V-IN / H-OUT #7/8 V-IN / H-OUT #9/10			1147	14.69 15.00	373.0 381.0	3.50 4.00	88.9 101.6								
075-High Flow	Size 08 Size 10	NPT-F	H-IN / H-OUT	Standard Dimensions(3)	---	-	9.02	229.1	0.85	21.0								
			V-IN / V-OUT			-	11.20	284.6	-	-								
			H-IN / V-OUT			-	10.11	256.9	0.83	21.0								
			V-IN / H-OUT			-	10.11	256.9	0.83	21.0								
			V-IN / V-OUT	Retrofit Only(4)	GT1305	1305	7.75	196.9	-	-								
		Flanged 150lbs RF	H-IN / H-OUT #7/8 H-IN / H-OUT #9/10	Standard Dimensions(3)	---	-	9.02	229.1	3.94 4.72	100.0 120.0								
			V-IN / V-OUT #7/8 V-IN / V-OUT #9/10			-	11.20	284.6	-	-								
			H-IN / V-OUT #7/8 H-IN / V-OUT #9/10			-	10.11	256.9	3.94 4.72	100.0 120.0								
			V-IN / H-OUT #7/8 V-IN / H-OUT #9/10			-	10.11	256.9	3.94 4.72	100.0 120.0								

Note (3): Standard dimension are for new installations.
Note (4): Retrofit dimensions are for replacement of GT10xx, GT130x and Full-View meters in existing installation. Not for use in new installations.

Approvals and Certifications

Declarations	Mark	Meter Options: Mechanical	Meter Options: Reed Switch	Meter Options: Inductive Alarm	Standards / Directives / Marking	Status / Certificate
EU Declaration of Conformity	CE			✓	EMC Directive (2014/30/EU)	Declaration
			✓	✓	RoHS Directive (2011/65/EU)	Declaration
			✓	✓	ATEX Directive (2014/34/EU)	Declaration
		✓			ATEX Directive (2014/34/EU) : Non-Electrical	Declaration
			✓		EMC Directive (2014/30/EU) The equipment uses a reed switch sensor & is outside the scope of the directive since the inherent nature of the physical characteristics of which is such that: (i) it is incapable of generating or contributing to electromagnetic emissions which exceed a level allowing radio and telecommunication equipment and other equipment to operate as intended; and (ii) it operates without unacceptable degradation in the presence of the electromagnetic disturbance normally consequent upon its intended use.	
		✓	✓	✓	Pressure Equipment Directive (2014/68/EU)	Declaration
		✓	✓	✓	Canadian Registration Number (CRN)	CRN
Explosion safety "Constructional safety (c)"	ATEX Ex	✓			II2G Ex h IIC T6…T4 Gb II2D Ex h IIIC T120°C Db Special conditions for safe use: Refer to IOM	TCF: 203104000-1604
Explosion safety "encapsulation (m)"	ATEX Ex IECEX		✓		II 2 G Ex mb IIC T6 Gb II 2 G Ex mb IIC T5 Gb II 2 D Ex mb IIIC T85°C Db (Standard Version) II 2 D Ex mb IIIC T100°C Db (With Junction box Version)	KIWA 18ATEX0013 X
			✓		Ex mb IIC T6 Gb Ex mb IIC T5 Gb Ex mb IIIC T85°C Db (Standard Version) Ex mb IIIC T100°C Db (With Junction box Version)	IECEx KIWA 18.0008X
					Standards used for evaluation: EN 60079-0 : 2012+A11: 2013, EN 60079-18 : 2015 IEC 60079-0 : 2011, IEC 60079-18 : 2014 Ambient Temperature range: -20°C to +65°C (Standard Version) -20°C to +55°C (With Junction box Version) Input Power: 30V, 250mA, 3W Special conditions for safe use: Refer to IOM	
Explosion safety "Intrinsic Safety (ia)"			✓		Reed Switch Alarms are classified as "Simple Apparatus" when used in Intrinsically Safe circuits. They comply with the requirements of EN60079-11 clause 5.7 – Simple apparatus. Ambient Temperature ratings: -20°C ≤ Tamb ≤ 65°C Input parameters: Vmax = 30V, Imax = 100mA, Ci = 0μF, Li = 0μH Special conditions for safe use: Refer to IOM	
Explosion safety "Intrinsic Safety (ia)"	c UL us		✓		IS Class I, II, III, Div 1, Groups A, thru G	UL File E73889 Vol3 Sec 6
				✓	Inductive Ring Sensor: Pepperl + Fuchs Model: RC10-14-N3-Y53478 Pepperl + Fuchs Model: RC15-14-N3-Y53479 Non-Hazardous Locations Power Supply: Nominal Voltage 8V Operating Voltage 5...25V Current Consumption: Active area clear: 3mA (at 8V) Active area obscured: 0.5...0.95mA (at 8V) Ambient Temperature: 0°C to 40°C	
Explosion safety "Intrinsic Safety (ia)"	ATEX Ex			✓	Hazardous Location ATEX: II 2 G Ex ia IIC T6…T1 Gb IP67 Refer to ATEX Certificate for: Input parameters, Max Ambient Temperature, Special conditions for use	Pepperl + Fuchs PTB 99 ATEX 2128 X
	FM APPROVED			✓	FM Approvals: Class I, Division 1, Group A, B, C, Class II, Division 1, Group E, F, G, Class III, Division 1 Class I, Zone 0, Group IIC T6	Pepperl + Fuchs Control Drawing:116-0165G

Model Code

Code Description	Code Option	Option Description
I.-II. Base Model Number	16	Large Glass Tube Flowmeter

III. Body Flow/Scale Length		Body Flow	Scale Length
	1	250-High Flow	250mm
	2	127-High Flow	127mm
	3	075-High Flow	75mm
	4	127-Low Flow	127mm

IV. Connection Orientation		
	0	Horizontal Inlet - Horizontal Outlet
	4	Vertical Inlet - Vertical Outlet
	6	Horizontal Inlet - Vertical Outlet
	7	Vertical Inlet - Horizontal Outlet

V. Model Revision		
	A	Initial release of global model code

VI.-VII. Maximum Flowrate

	250 - High Flow							
	Water		Air					
Code	GPM	l/h	SCFM(1)	m^3n/h(2)	Tube		Float	
JC	0.48	100	1.8	3.1	J	R-7M-25-1FT	C	7-XV-11A-A
JF	0.77	170	3.3 (5.7)*	5.5 (9.6)*	J	R-7M-25-1FT	F	7-XS-23-A
KC	1.00	240	4.4	7.5	K	R-8M-25-4FT	C	8-XV-8-A
KF	1.40	320	5.8	9.9	K	R-8M-25-4FT	F	8-XV-14-A
KJ	2.00	460	8.1 (14)*	13.7 (24)*	K	R-8M-25-4FT	J	8-XV-31-A
LC	3.20	730	13	22	L	R-9M-25-3FT	C	9-XS-33-A
LF	3.90	890	16.1 (28)*	27.5 (48)*	L	R-9M-25-3FT	F	9-XV-87-A
LJ	5.10	1100	20.7 (36)*	35.5 (62)*	L	R-9M-25-3FT	J	9-XS-87-A
MC	6.20	1400	25	43	M	R-10M-25-3FT	C	10-XV-64-A
MF	7.80	1700	32	54	M	R-10M-25-3FT	F	10-XS-64-A
MJ	10.00	2400	45.9 (80)*	74.4 (130)*	M	R-10M-25-3FT	J	10-XS-138-A
MM	21.00	4800	86.1 (150)*	154.6 (270)*	M	R-10M-25-3FT	M	10-XJ-238-A

	127 - High Flow							
	Water		Air					
Code	GPM	l/h	SCFM(1)	m^3n/h(2)	Tube		Float	
SC	0.41	93	1.8	3	S	R-7M-127-1FT	C	7-XV-11A-A
SF	0.66	150	2.7 (4.7)*	4.6 (8.1)*	S	R-7M-127-1FT	F	7-XS-23-A
TC	0.99	220	4	6.8	T	R-8M-127-4FT	C	8-XV-8-A
TF	1.3	310	5.3	9	T	R-8M-127-4FT	F	8-XV-14-A
TJ	1.7	400	6.4 (11)*	11.4 (20)*	T	R-8M-127-4FT	J	8-XV-31-A
UC	3	690	12	21	U	R-9M-127-4FT	C	9-XS-33-A
UF	3.6	830	14.9 (26)*	25.2 (44)*	U	R-9M-127-4FT	F	9-XV-87-A
UJ	4.5	1000	18.4 (32)*	31.5 (55)*	U	R-9M-127-4FT	J	9-XS-87-A
VC	6	1300	24	41	V	R-10M-127-3FT	C	10-XV-64-A
VF	7.4	1600	30	52	V	R-10M-127-3FT	F	10-XS-64-A
VJ	9.8	2200	39 (68)*	63 (110)*	V	R-10M-127-3FT	J	10-XS-138-A
VM	20	4700	80.4 (140)*	143.2 (250)*	V	R-10M-127-3FT	M	10-XJ-238-A

	075 - High Flow							
	Water		Air					
Code	GPM	l/h	SCFM(1)	m^3n/h(2)	Tube		Float	
PC	0.82	180	3.3	5.6	P	R-8M-75-1	C	8-XV-8-A
PF	1.5	340	6.3	10	P	R-8M-75-1	F	8-RJ-10
PJ	2.4	540	9.9	16	P	R-8M-75-1	J	8-RJ-23
PM	3.1	710	13	22	P	R-8M-75-1	M	8-RJ-30
PQ	4.7	1000	N/A	N/A	P	R-8M-75-1	Q	8-RJ-39
RC	12	2700	N/A	N/A	R	R-10M-75-3	C	10-RJ-80
RF	21	4900	N/A	N/A	R	R-10M-75-3	F	10-RJ-180
RJ	N/A	N/A	24	40	R	R-10M-75-3	J	10-RJ-37
RM	N/A	N/A	36	62	R	R-10M-75-3	M	10-RJ-83
RQ	N/A	N/A	43	73	R	R-10M-75-3	Q	10-RJ-90

Note (1): Air flow rates in standard units are at 70°F & 14.7 psia. Reference conditions 70°F 1 atm.
Note (2): Air flow rates in normal units are at 1.013 bar & 20°C. Reference conditions 20°C 1 atm.

*These codes require a back pressure of 30 psig / 2.069 bar. Flow rates in parenthesis are when this back pressure is applied.

Code Description	Code Option	Option Description							
VI.-VII. Maximum Flowrate (Continued)		127 - Low Flow							
		Water		Air					
	Code	cc/min	l/h	SLPM[1]	ln/h[2]	Tube		Float	
	A3	1.9	0.11	0.11	6.7	A	R-2-127-AAAAT	3	316SS
	A6	3.7	0.22	0.2	12	A	R-2-127-AAAAT	6	CARBOLOY
	B6	6.1	0.36	0.32	19	B	R-2-127-AAT	6	CARBOLOY
	C3	16	1	0.71	42	C	R-2-127-DT	3	316SS
	C6	28	1.7	1	63	C	R-2-127-DT	6	CARBOLOY
	D3	39	2.3	1.4	85	D	R-2-127-AT	3	316SS
	D6	58	3.5	2	120	D	R-2-127-AT	6	CARBOLOY
	E3	110	6.8	3.9	230	E	R-2-127-BT	3	316SS
	E6	170	10	5.7	340	E	R-2-127-BT	6	CARBOLOY
	F6	280	17	9.5	570	F	R-2-127-CT	6	CARBOLOY
	G3	410	25	14	840	G	R-6-127-AT	3	316SS
	G6	620	37	20	1200	G	R-6-127-AT	6	CARBOLOY
	H3	1000	65	35	2100	H	R-6-127-BT	3	316SS
	H6	1500	95	49	2900	H	R-6-127-BT	6	CARBOLOY

VIII. Fitting Material	A	316 Stainless Steel	
	B	316 Stainless Steel w/ CRN	
IX. Connection Size	1	1/4″	Low Flow
	2	1/2″	High Flow
	3	3/4″	High Flow
	4	1″	High Flow
	5	1″	Vertical / 3/4″ Horizontal. Size 10 only.
X-XI. Connection Type	AA	Standard / GT1000 Retrofit	NPT - Female
	AB	Standard / GT1000 Retrofit	ANSI #150 RF Flange
	BA	Retrofit GT130x	NPT - Female
	CA	Retrofit Full-View 11xx	NPT - Female
	CB	Retrofit Full-View 11xx	ANSI 150# RF Flange
	DC	Retrofit GT1000	Rc - Female
XII. O-Ring Material	1	Viton® fluoroelastomer	
	2	Buna	
	3	Kalrez®	
	4	EPDM	
XIII. Scale Inscription	1	MM Scale	
	2	Percent Scale	
	3	Direct Reading Scale	
	4	Dual Scale	
XIV. Meter Accuracy	A	±10%	
	B	±5% Full Scale	
	D	±2% Full Scale	
	F	±1% Full Scale	
	G	2.5 VDI/VDE	
	H	1.6 VDI/VDE	
XV. Valve Type/Location	0	None	
	1	Valve at Inlet	
	2	Valve at Outlet	
XVI. Alarm	0	None	
	1	1 Switch/Sensor	
	2	2 Switches/Senors	
XVII. Approvals	A	None	
	B	ATEX - Zone 1 & Zone 2, non-Electrical	
	C	UL / FM - Hazardous location	
	D	ATEX - Zone 1 & Zone 2, Electrical	

Sample Standard Model Code

I-II	III	IV	V	VI-VII	VIII	IX	X-XI	XII	XIII	XIV	XV	XVI	XVII
16	1	4	A	D0	A	2	AA	1	3	D	0	0	A

* These parts and services are not part of the product model code but should be selected during product configuration.

Accessory Parts

Condulet Junction Box Assembly

16xx Model Code, Position XVI - "16"

Option Code	Description	Part Numbers for Relays
0	None	---
1	1 Switch / Sensor	203Z023AAA
2	2 Switches / Sensor	203Z023AAA

Relay

16xx Model Code, Position XVI - "16"

Alarm		Part Numbers for Relays				
Option Code	Description	110VAC 1 or 2 relay		220VAC 1 or 2 relay		24VAC 1 or 2 relay
0	None	---	-	---	-	---
1	1 Switch / Sensor	029G008ZZZ	or	029G010ZZZ	or	029G012ZZZ
2	2 Switches / Sensor	029G008ZZZ	or	029G010ZZZ	or	029G012ZZZ

Mounting Kits

16xx Model Code, Position III - "3"

	Flow / Scale Length		Part Numbers for Kits	
Option Code	Description		Front of panel (wall) mounting	Back of panel (flush) mounting
1	250 - High Flow	250mm	778Z019AAA	778Z021AAA
2	127 - High Flow	---	---	---
3	075 - High Flow	75mm	---	---
4	127 - Low Flow	127mm	778Z018AAA	778Z020AAA

Services

Clean for Oxygen Service 2.1
Commercial Cleaning
Declaration of Compliance 2.1
International Calibration Certificate (ICC)
Material Certification 3.1
NACE MR0175 MR0103
PMI (Positive Material Identification)
Pressure Test Certificate 2.2

Service and Support

Brooks is committed to assuring all of our customers receive the optimal solution for their application, along with outstanding service and support to back it up. We operate first class repair facilities located around the world to provide rapid response and support. Each location utilizes primary standard calibration equipment to ensure accuracy and reliability for repairs and recalibration and is certified by our local Weights and Measures Authorities and traceable to the relevant International Standards.

Visit www.BrooksInstrument.com to locate the service location nearest to you.

START-UP SERVICE AND IN-SITU CALIBRATION

Brooks Instrument can provide start-up service prior to operation when required. For some process applications, where ISO-9001 Quality Certification is important, it is mandatory to verify and/or (re)calibrate the products periodically. In many cases this service can be provided under in-situ conditions, and the results will be traceable to the relevant international quality standards.

SEMINARS AND TRAINING

Brooks Instrument can provide customer seminars and dedicated training to engineers, end users, and maintenance persons. Please contact your nearest sales representative for more details. Due to Brooks Instrument's commitment to continuous improvement of our products, all specifications are subject to change without notice.

TRADEMARKS
Brooks ..... Brooks Instrument, LLC
All other trademarks are the property of their respective owners.

Data-Sheet-GT1600-EN/2026-06

Global Headquarters
Brooks Instrument
407 West Vine Street
Hatfield, PA
19440-0903 USA

Toll-Free (USA): 888-554-FLOW
T: 215-362-3500
BrooksAM@BrooksInstrument.com

A list of all Brooks Instrument locations and contact details can be found at www.BrooksInstrument.com

©Copyright 2026 Brooks Instrument, LLC All rights reserved. Printed in U.S.A.

BROOKS® INSTRUMENT
Beyond Measure