Installation & Operation Manual

GF100, GF120xHT, GF101 Series Mass Flow Controllers & Meters

BROOKS®
INSTRUMENT
Beyond Measure

Essential Instructions
Read before proceeding!

Brooks Instrument designs, manufactures and tests its products to meet many national and international standards. These products must be properly installed, operated and maintained to ensure they continue to operate within their normal specifications. The following instructions must be adhered to and integrated into your safety program when installing, operating and maintaining Brooks Instrument products.

- To ensure proper performance, use qualified personnel to install, operate, update, program and maintain the product.
- Read all instructions prior to installing, operating and servicing the product. If this instruction manual is not the correct manual, please see back cover for local sales office contact information. Save this instruction manual for future reference.

⚠ WARNING: Do not operate this instrument in excess of the specifications listed in the Instruction and Operation Manual. Failure to heed this warning can result in serious personal injury and / or damage to the equipment.

- If you do not understand any of the instructions, contact your Brooks Instrument representative for clarification.
- Follow all warnings, cautions and instructions marked on and supplied with the product.

⚠ WARNING: Prior to installation ensure this instrument has the required approval ratings to meet local and national codes. Failure to heed this warning can result in serious personal injury and / or damage to the equipment.

- Install your equipment as specified in the installation instructions of the appropriate instruction manual and per applicable local and national codes. Connect all products to the proper electrical and pressure sources.
- Operation: (1) Slowly initiate flow into the system. Open process valves slowly to avoid flow surges. (2) Check for leaks around the flow meter inlet and outlet connections. If no leaks are present, bring the system up to the operating pressure.
- Please make sure that the process line pressure is removed prior to service. When replacement parts are required, ensure that qualified people use replacement parts specified by Brooks Instrument. Unauthorized parts and procedures can affect the product's performance and place the safe operation of your process at risk. Look-alike substitutions may result in fire, electrical hazards or improper operation.
- Ensure that all equipment doors are closed and protective covers are in place to prevent electrical shock and personal injury, except when maintenance is being performed by qualified persons.

⚠ WARNING: For liquid flow devices, if the inlet and outlet valves adjacent to the devices are to be closed for any reason, the devices must be completely drained. Failure to do so may result in thermal expansion of the liquid that can rupture the device and may cause personal injury.

⚠ WARNING: Some devices may be operated above room temperature (GF100, GF101, and GF120xHT Series). The GF120xHT flow module can operate up to 150°C. The surfaces may be hot, use caution and allow to cool before servicing. Contact may cause personal injury.

European Pressure Equipment Directive (PED)

All pressure equipment with an internal pressure greater than 0.5 bar (g) and a size larger than 25mm or 1" (inch) falls under the Pressure Equipment Directive (PED).

- The Specifications Section of this manual contains instructions related to the PED directive.
- Products described in this manual are in compliance with EN directive as per listed in their respective tables (Table 1-3 through Table 1-7).
- All Brooks Instrument Flowmeters fall under fluid group 1.
- Products larger than 25mm or 1" (inch) are in compliance with PED category I, II or III.
- Products of 25mm or 1" (inch) or smaller are Sound Engineering Practice (SEP).

European Electromagnetic Compatibility (EMC)

The Brooks Instrument (electric/electronic) equipment bearing the CE mark has been successfully tested to the regulations of the Electro Magnetic Compatibility (EMC) directive Replace with: as per listed in their respective tables (Table 1-3 through Table 1-7) under normal operating conditions.

Special attention, however, is required when selecting the signal cable to be used with the CE marked equipment, as well as grounding of the equipment.

Ground Signal Wires & Power Lines

- Brooks Instrument supplies high quality cable(s) that meets the specifications for CE certification.
- If you provide your own signal cable, you should use a cable which is overall completely screened with a 100% shield.
- "D", "Circular" or "RJ45" type connectors used should be shielded with a metal shield.
- If applicable, metal cable glands must be used to provide cable screen clamping. The cable screen should be connected to the metal shell or gland and shielded at both ends over 360 Degrees. The shield should be terminated to an earth ground.
- Card Edge Connectors are standard non-metallic. The cables used must be screened with 100% shield to comply with CE certification. The shield should be terminated to an earth ground.
- For twisted pair connections (e.g. RJ45), to avoid electrical interference and to meet the Electro Magnetic Compatibility (EMC directive) requirements, use individually shielded twisted pair cable, either in single pair or mulit-pair varieties.
- For pin configuration: Please refer to the enclosed Instruction Manual.

Grounding the Device

- Ground the device to earth using a low-impedance conductive connection path, such as a grounded substrate or the pipeline plumbing (if the joints are ground-bonded). Improper grounding can cause measurement error or damage to the device.

ESD (Electrostatic Discharge)

⚠ CAUTION: This instrument contains electronic components that are susceptible to damage by static electricity. Proper handling procedures must be observed during the removal, installation or other handling of internal circuit boards or devices. Handling Procedure:

1. Power to unit must be removed.
2. Personnel must be grounded, via a wrist strap or other safe, suitable means before any printed circuit card or other internal device is installed, removed or adjusted.
3. Printed circuit cards must be transported in a conductive container. Boards must not be removed from protective enclosure until immediately before installation. Removed boards must immediately be placed in protective container for transport, storage or return to factory.

Comments

This instrument is not unique in its content of ESD (electrostatic discharge) sensitive components. Most modern electronic designs contain components that utilize metal oxide technology (NMOS, SMOS, etc.). Experience has proven that even small amounts of static electricity can damage or destroy these devices. Damaged components, even though they appear to function properly, exhibit early failure.

Section 1 General Information

Introduction 5
How to Use This Manual 5
Product Support References 6
Notice and Caution Statements 6
Product Warranty 6
How to Order a GF100 Series Device 6
Industry Standard References 6
Glossary of Terms and Acronyms 6
Description 9
Specifications for GF100/GF120xHT/GF101 Series Devices 12

Section 2 Installation

General 25
Receipt of Equipment 25
Recommended Storage Practice 25
Return Shipment 25
Transit Precautions 26
Removal from Storage 26
Gas Connections 26
In-Line Filter 26
Mechanical Installation 26
Flow Controller Installation Arrangement 27
Purge the Gas Supply Line Before GF100 Series Installation 28
Position and Mount the GF100/GF120xHT/GF101 Series 30
Perform a Leak Test 32
Zeroing Setup Process 32
Zeroing the GF100/GF120xHT/GF101 Series 32
Zeroing the GF125/GF126 Series Pressure Transducer from the LCD Display Panel 33
Zeroing GF100/GF120xHT/GF101 Series Flow from LCD Display Panel 34
Performance Checks 34
Introduction to the MultiFlo™ Configurator 35
Using the MultiFlo™ Configurator 35
Electrical Connections 37
DeviceNet Connections 37
Analog/RS485 Connections 38
EtherCat Connections 39

Section 3 Operation

General 42
Theory of Operation for Flow Measurement 42

Section 4 Maintenance & Troubleshooting

Overview 44
Maintenance 44
Troubleshooting 46
Troubleshooting Checklist 46
GF100/GF120xHT/GF101 Series Troubleshooting Guide 47

Section 5 Product Description Code

Overview 51
GF100 Series Ordering Instructions 59

Appendix A: GF100 Series Patents

GF100/GF120xHT/GF101 Series Patents 61

Warranty, Local Sales/Service Contact Information ..... Back Cover

Figures

1-1 GF100, GF120xHT, and GF101 Series High Performance Mass Flow Controller & Meter..... 5
1-2 LCD Display 11
1-3 Dimensions - GF100/GF120/GF125 Series 19
1-4 Dimensions - GF101/GF121/GF126 Series 20
1-5 Dimensions - GF100/GF120/GF125, GF101/GF121/GF126 Series with EtherCAT Communications 21
1-6 Dimensions - GF120xHT Series..... 23

2-1 Typical Gas Supply Arrangement with Non-PTI MFC 27
2-2 Typical Gas Supply Arrangement with PTI MFC 27
2-3 GF100 Series Mounting Attitude Positions..... 29
2-4 GF120xHT Series Mounting Attitude Positions 29
2-5 GF100 Series Mounted to K1 Series Substrate Blocks..... 31
2-6 Mounting Screws Torque Pattern 31
2-7 Display with PSI Reading..... 33
2-8 Display Reading Zero PSI..... 33
2-9 Display Set to %FS 34
2-10 % Flow Display Set to Zero..... 34
2-11 MultiFlo Cable Adapter 36
2-12 USB-RS485 Converter (214F027AAA) 36
2-13 Diagnostic Port Locations..... 36
2-14 Example of GF100 Series with a DeviceNet Communication 37
2-15 Example of GF100 Series with 9-Pin Analog Connector..... 38
2-16 Analog 9-Pin Connector, Alternate Pin-out Options Available 38
2-17 Example of GF100 Series with EtherCAT Commnications, M8 Power Connector Location 39
2-18 M8 Power Connector Drawing 39
2-19 GF100 Series Electrical Interface Options 40
2-20 GF120xHT Series Electrical Interface Options..... 41

3-1 GF100 Series Operating Principles..... 43

Tables

1-1 Industry Standard References..... 7
1-2 Terms and Acronyms..... 8
1-3 Specifications for GF100/GF120/GF125 Series with Analog and DNET Communications..... 13
1-4 Specifications for GF100/GF120/GF125 Series with EtherCAT Communications 15
1-5 Specifications for GF100/GF121/GF126 Series with Analog and DNET Communications..... 17
1-6 Specifications for GF101/GF121/GF126 Series with EtherCAT Communications 18
1-7 Specifications for GF120xHT Series 17

2-1 K1 Series Fasteners..... 31
2-2 K1 Substrate Torque Data 31
2-3 Gas and Flow Ranges - MultiFlo Configurable - N2 Equivalent..... 35

4-1 Environmental Factors 46
4-2 GF100 Series Troubleshooting Guide..... 47

5-1 GF100, GF120 & GF125 Series Product Description Code..... 51
5-2 GF100, GF120 & GF125 Series with EtherCAT Communications Product Description Code 53
5-3 GF101, GF121 & GF126 Series Product Description Code..... 54
5-4 GF101, GF121 & GF126 Series with EtherCAT Communications Product Description Code 56
5-5 GF120xHT Series Product Description Code..... 57

A-1 GF100/GF120xHT/GF101 Series Patents..... 61

Introduction

Designed for semiconductor, MOCVD, and other gas flow control applications that require a high purity all-metal flow path, the Brooks GF100/GF120xHT/GF101 Series mass flow controllers and meters deliver outstanding performance, reliability, and flexibility. Process throughput and yield are maximized while process costs are reduced featuring:

- Ultra fast settling time for quick start up and very rapid process steps
- MultiFlo™ gas and range configurability enabling reconfiguration without removing device from the gas line
- An independent diagnostic/service port to troubleshoot or change flow conditions without removing the mass flow controller from service
- Long-term stability due to extremely low wetted surface area, and corrosion resistant Hastelloy® sensor and valve seat

Optional model variations including—pressure transient insensitivity (PTI), Safe Delivery System (SDS), Zero Leak Valve (ZLV), and High Temperature (HT).

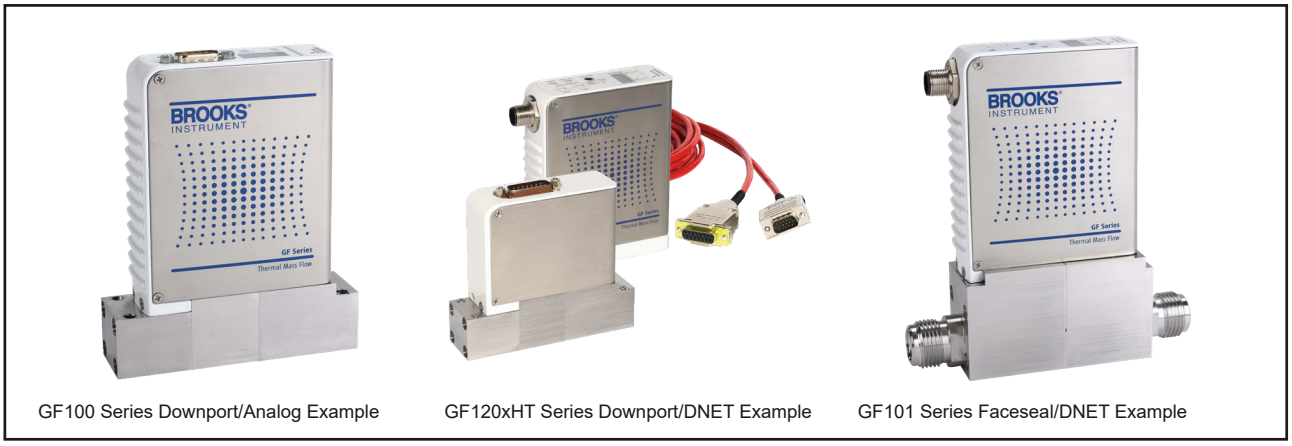

GF100 Series Downport/Analog Example | GF120xHT Series Downport/DNET Example | GF101 Series Faceseal/DNET Example

Figure 1-1 GF100, GF120xHT, and GF101 Series High Performance Mass Flow Controller & Meter

How to Use This Manual

This manual is intended to provide the user with all the information necessary to install, operate, troubleshoot and maintain these thermal mass flow devices. The manual is organized in the following sections:

Section 1 Introduction
Section 2 Installation
Section 3 Operation
Section 4 Maintenance and Troubleshooting
Section 5 Product Description Code
Appendix A GF100, GF120xHT, and GF101 Series Patents
Appendix B Essential Instructions
Warranty, Local Sales/Service Contact Information

It is recommended that this manual be read in its entirety before attempting to operate or repair these devices.

Product Support References

Refer to www.BrooksInstrument.com for Brooks sales and service locations and to obtain other documents that support the GF100, GF120xHT, and GF101 Series. Those documents include:

- Brooks MultiFlo™ Configurator Quick Start Manual:

  X-SW-MultiFlo-Config-QS-eng. part Number 541B167AAG

- Brooks GF100 and GF101 Series data sheets:

  Data-Sheet-GF100-EN

  Data-Sheet-GF120xHT-EN

  DS-DPT-EtherCAT-GF100-Series-eng

Notice and Caution Statements

Warning, caution and notice statements are located throughout this manual in the ANSI format. A WARNING statement indicates a potentially hazardous situation which, if not avoided, COULD result in death or serious injury. A CAUTION statement indicates a potentially hazardous situation which, if not avoided, MAY result in minor or moderate injury. It may also be used to alert against unsafe practices. A NOTICE statement describes specific information that requires special attention.

Product Warranty

Product warranty information can be found on the Back Cover of this Manual and on the Brooks website at www.BrooksInstrument.com. This information provides general warranty information, limitations, disclaimers, and applicable warranty periods according to product group.

How to Order a GF100 Series Device

Refer to Section 5.

Industry Standard References

Refer to Table 1-1.

Glossary of Terms and Acronyms

Refer to Table 1-2.

Table 1-1 Industry Standard References

Reference Number	Reference Description
MIL-STD-810	Method 514.4, Category 1, Transportation Requirement Method 516.4, Procedure 1, Functional Shock Test Requirement
SEMI E12	Standard temperature and pressure
SEMI E16	Guideline for determining and describing MFC leak rates
SEMI E17	Guideline for MFC transient characteristics tests
SEMI E18	Guideline for temperature specifications of the MFC
SEMI E27	Standard for MFC and MFM linearity
SEMI E28	Guideline for pressure specifications for the MFC
SEMI E52	Practice for referencing gases used in digital MFCs
SEMI E54	Sensor actuator network connections for DeviceNet
SEMI E56	Test method for determining accuracy, linearity, repeatability, short-term reproducibility, hysteresis of thermal MFCs
SEMI E66	Test method for determining particle contribution by MFCs
SEMI E67	Test method for determining reliability of MFCs
SEMI E68	Test method for determining warm-up time of MFCs
SEMI E69	Test method for reproducibility and zero drift for thermal MFCs
SEMI E80	Test method for determining attitude sensitivity of MFCs
SEMI E16-90	Guidelines for determining and describing mass flow controllers leak rates
SEMI F19	Specification for the finish of the wetted surface of electro polished 216L stainless steel components
SEMI F20	Specifications for 316L stainless steel bar, extruded shapes, plate, and investment castings for components used in ultra-high purity semi manufacturing applications
SEMI F36	Guide for dimensions and connections of gas distribution components
SEMI F37	Method for determination of surface roughness parameters for gas distribution system components
SEMI F44	Guideline for standardization of machined stainless steel weld fittings
SEMI F45	Guideline for standardization of machined stainless steel reducing fittings
SEMI F47	Specifications for semiconductor processing equipment voltage sag immunity
SEMI S2	Environmental, Health and Safety Guidelines
SEMI S9	Dielectric testing
SEMI S10	Risk assessment
SEMI S12	Decontamination of fielded products
ETG.1000.2	Physical Layer service definition and protocol specification
ETG.1000.3	Data Link Layer service definition
ETG.1000.4	Data Link Layer protocol specification
ETG.1000.5	Application Layer service definition
ETG.1000.6	Application layer protocol specification
ETG.1020	EtherCAT Protocol Enhancements
ETG.2000	EtherCAT Slave Information
ETG.5001.1	Modular Device Profile - Part 1: General MDP Device Model
ETG.5003.1	Semiconductor Device profile - Part 1: Common Device Profile (CDP)
ETG.5003.2020	Specific Device Profile: Enhanced Mass Flow Controller
ETG.5003.2021	Specific Device Profile: Mass Flow Controller
ETG.5003.2022	Specific Device Profile: Mass Flow Meter
ETG.5003.2023	Specific Device Profile: Enhanced Mass Flow Meter

Table 1-2 Terms and Acronyms

Term or Acronym	Definition
CSR	Customer Special Requirement
CVD	Chemical Vapor Deposition
DeviceNet	A 5-wire local network I/O communication device that employs a command/response communication protocol
DSP	Digital Signal Processor
EPI Epitaxy (EPI).	A process technology where a pure silicon crystalline structure is deposited or “grown” on a bare wafer, enabling a high-purity starting point for building the semiconductor device.
HBD	Horizontal Base Down
HT	High Temperature
GF100 Series	Integrated Flow Controller
F.S.	Full Scale
LED	Light Emitting Diode
MFC	Mass Flow Controller
MultiFlo Configurator	I/O communication software package that configures gas and flow ranges
MultiFlo Technology	A physics-based calibration methodology that enables gas and flow range configuration within a defined standard configuration
PID	Proportional Integral Derivative Controller
PSIA	Pounds per Square Inch Absolute
PSID	Pounds per Square Inch Differential
PSIG	Pounds per Square Inch Gauge
PTI	Pressure Transient Insensitive. Reduces the effect of pressure fluctuations in gas flow. Applicable to GF125 only.
ROR	As pressure increases, flow increases at a pressure rate of rise, or ROR.
HC	Standard Configuration w/ Hastelloy® sensors (to reduce reaction to corrosive gases)
S.P.	Setpoint
Step Technology	Enables fast set point control through a high speed DSP and low volume drive circuit
VIU	Vertical mounting attitude with inlet side facing up

Description

Ultra Fast Response

The Brooks GF Series patented flow sensor combined with a high speed ARM processor and fast acting diaphragm-free valve assembly enables:

- Faster response and settling time for improved wafer throughput
- Ultra-fast 1-2 second etch step processing
- Reduced diverted gas consumption and associated abatement costs
- Time sensitive gas delivery steps (ex: Atomic Layer Deposition)
- User programmable start-up function for processes requiring a slow ramped gas turn-on or time critical transitions between flow rates

MultiFlo™ Gas and Range Configurability

The Brooks MultiFlo technology delivers exceptional improvement in process gas accuracy for linear and non-linear gases. This is achieved through advanced gas modeling and optimized through actual gas testing. Brooks MultiFlo™ allows the device to be quickly and easily configured for another gas and/or flow range without sacrificing accuracy or rangeability. Selecting a new gas automatically creates a new calibration curve, establishes optimized PID settings for dynamic control, automatically compensates for gas density effects, and minimizes overshoot during transitions between flow rates with excellent steady-state stability. Brooks MultiFlo technology offers unparalleled flexibility. An extensive gas database is provided and a single device can be quickly programmed for thousands of different gas and flow range combinations. Process benefits achieved:

- Mass flow controller full scale full range can be rescaled down typically by a factor of 3:1 with no impact on accuracy, turndown or leak by specifications for binned devices
- Optimum process and inventory flexibility resulting in dramatically reduced inventory costs
- Fewer configurations/bin sizes required to support many different processes
- Less down-time with rapid process recovery

MultiFlo™ Support References:

Brooks MultiFlow Configurator Quick Start Guide (X-SW-MultiFlo-Config-QS-eng (Part Number: 541B167AAG))

MultiFlo™ Configurator Accessory Kits:

778Z010ZZZ Basic MultiFlo Configurator Kit

*Software, MultiFlo Configurator

124Y211AAA BEST/Multiflo-USB-RS485

778Z011ZZZ Basic MultiFlo Configurator Kit w/Power Supply and Adapter Cables

*Software, MultiFlo Configurator

124Y211AAA BEST/Multiflo-USB-RS485

A332295001 Power Supply MFC

A332297002 Cable, Power, 9-Pin

A332297001 Cable, Power, DeviceNet

* MultiFlo Configurator Software is available on the Brooks Instrument website at:
www.BrooksInstrument.com/MultiFlo
https://www.brooksinstrument.com/en/documentation

Pressure Transient Insensitivity (PTI)— Included with all GF125 models

Cost and space constraints are driving gas panel designers to remove point-of-use pressure regulators and pressure monitoring components from the process design and rely solely on the mass flow controller to accurately control the process under dynamic pressure conditions. The Brooks GF125 (PTI) devices utilize a patented control algorithm that inverts the pressure signal, compares it to the pre-fluctuation signal and drives real-time valve position compensation to maintain stable flow. Enhanced pressure transient is achieved through faster sensing, quicker processing, and a reduction in internal dead-volume between the sensors and valve orifice.

GF101/121/126 based on the same technology and design as the low flow GF100 series (same sensor, same electronics, low power support)

- Smaller footprint than competitive MFC's
- Handles flow rates up to 300 slpm
- Metal seal for durability and high leak integrity
- Proprietary sensor technology
- Precise flow control with fast sub-1 second settling time
- 1% of reading accuracy
- Corrosion-resistant Hastelloy C-22 sensor tube

Optional Safe Delivery System (SDS)— GF120 model only

The Safe Delivery System (SDS) enhanced GF120 model is a state-of-the-art low pressure drop devices for the delivery of sub atmospheric safe delivery system gases used in Implant and Etch processes. The Brooks GF120 SDS models are available in full scale flow ranges 4 sccm -1 slm.

High Temperature Option - GF120xHT Model only

The GF120xHT High Temperature mass flow controllers and meters are designed to measure and control the mass flow rate of vapor from liquid or solid precursors used in novel processes. The GF120xHT flow module is designed to withstand operating environments of up to 150ºC. To support this temperature range, the electronics are to be remotely connected to the rest of the device and stored at a low temperature location (max 50ºC). The remote electronics can be DIN mounted with a choice of three different interconnecting cable lengths - 3ft, 8ft, and 16.5ft standard.

Advanced Thermal Flow Measurement Sensor

Brooks proprietary highly corrosion resistant Hastelloy C-22 sensor with an enhanced sensor manufacturing and burn in process incorporates a unique orthogonal sensor mounting orientation to eliminate sensor drift caused by valve heating effects and eliminates thermal siphoning effects. This unique sensor configuration includes an optimized temperature profile for gases prone to thermal decomposition. This design results in:

- Enhanced signal to noise performance for improved accuracy at low set points
- Superior reproducibility at elevated temperature through new isothermal packaging and onboard conditioning electronics with ambient temperature sensing and compensation
- Improved long-term stability

High Purity Flow Path

The Brooks GF Series has an all metal, corrosion resistant Semi F20 compliant wetted flow path with highly corrosion resistant Hastelloy C-22 valve seat and jet orifice. The GF120, GF120xHT, GF121, GF125, and GF126 devices are devices are constructed with a 5µ inch Ra max surface finish while the GF100 and GF101 are is constructed with a 10µ inch Ra.

- Overall reduced surface area and un-swept volumes for faster dry-down during purge steps
- Long-term sensor and device stability for maximum yield and throughput

Extensive Mechanical Configurations

GF Series supports all metal seal/UHP industry gas connection interface standards for full OEM and process coverage.

GF100 Series:

- Downport 79.8mm and 92mm C-seal 1-1/8” and 1-1/2” bodies
- Downport 79.8mm and 92mm W-seal 1-1/8” and 1-1/2” bodies
- 124mm 4 VCR 1-1/8” and 1-1/2” bodies

GF120xHT Series:

- Downport 92mm C-seal 1-1/8”
- Downport 92mm W-seal 1-1/8” and 1-1/2” bodies
- 124mm 4 VCR 1-1/8” and 1-1/2” bodies

GF101 Series

- Downport 92mm and 114mm 3/8” C-seal 1-1/2” bodies
- 134mm, 150.4mm, 166mm, and 168.6mm VCR -1/2” bodies

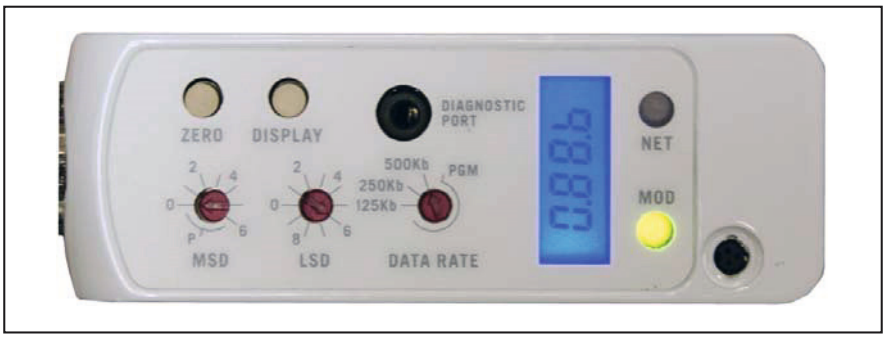

Figure 1-2 LCD Display

Enhanced Diagnostics and User Interface

The mass flow controller is one of the most complex and critical components in gas delivery systems. When dealing with ultra-high-purity gas distribution or highly toxic or corrosive gases, removing the mass flow controller to assess functionality should be the last resort. Brooks GF Series devices provide for in-line device evaluation and instantaneous troubleshooting through:

- Embedded self test routines and independent diagnostic/service port
- High visibility LCD display with easy accessible push button for local indication of Flow (%), Temperature (°C), Pressure (PSIA/kPa) and Network Address
- Zero button to easily re-zero the device during scheduled maintenance
- Rotatable display with a push button to enable improved readability based on how the MFC is mounted for applicable models. Simply hold button down for at least 3 seconds to rotate display. This feature is standard for GF101/GF121/ GF126 and available for GF100/GF120/ GF120xHT/GF125.

This combination of features results in limiting service interruption and reduced downtime.

Communication Interfaces

The GF100, GF120xHT, and GF101 Series support analog 0-5 Vdc, RS485, DeviceNet™ and EtherCAT® communication protocols. Analog connections can be accessed via the DeviceNet or RS485 or Analog only connector options. DeviceNet and RS485 are multi-drop connections that allow a maximum of 64 devices for DeviceNet and 32 devices for RS485 to be connected on the same network. Brooks Instrument's DeviceNet profile has been certified by the ODVA™ (Open DeviceNet Vendor's Association). EtherCAT is an Ethernet based communications system know for its high cycle time and cost efficient cabling and master application solutions. The EtherCAT GF100/GF120xHT/GF101 Series devices conform to the ETG.5003 Semiconductor Device Profile specification. A range of low profile adapter cables facilitate replacing previously installed devices eliminating the need to carry multiple devices of the same gas/range but different electrical connectors.

Specifications for GF100/GF120xHT/GF101 Series Devices

⚠ WARNING

Do not operate this instrument in excess of the specifications listed below. Failure to heed this warning can result in serious personal injury and/or damage to the equipment.

⚠ CAUTION

It is the user's responsibility to select and approve all materials of construction. Careful attention to metallurgy, engineered materials and elastomeric materials is critical to safe operation.

See Table 1-3 for specifications GF100/GF120/GF125 Series with Analog and DNET Communications.

See Table 1-4 for specifications for GF100/GF120/GF125 Series with EtherCAT Communications

See Table 1-5 for specifications for GF100/GF120/GF125 Series with Analog and DNET Communications.

See Table 1-6 for specifications for GF101/GF121/GF126 Series with EtherCAT Communications.

See Table 1-7 for specifications for GF120xHT Series

See Figure 1-3 for dimensions for the GF100/GF120/GF125 Series.

See Figure 1-4 for dimensions for the GF101/GF121/GF126.

See Figure 1-5 GF100/GF120/GF125, GF101/GF121/GF126 Series with EtherCAT Communications.

See Figure 1-6 for dimensions for the GF120xHT

Table 1-3 Specifications for GF100/GF120/GF125 Series with Analog and DNET Communications

	GF100	GF120	GF125	GF120XSL	GF120XSD
Performance					
Full Scale Flow Ranges	3 sccm to 55 slm			4 sccm to 25 sccm	>25 sccm to 1 slm
Flow Accuracy	±1% S.P. > 35-100%, ±0.35% F.S. 2-35%				
Repeatability & Reproducibility	5-100% = ± 0.15% of S.P. 2-5% = ± 0.015% of F.S.				
Linearity	± 0.5% F.S. (included in accuracy)			---	
Response Time (Setting Time) Normally Closed Valve	< 1 sec	700ms	300ms (3-860 sccm) 400ms (861-7200 sccm) 500ms (7201-30000 sccm) <700ms (30001-55000 sccm)	< 3 sec	
Normally Open Valve	<1.5 sec			---	
Pressure Insensitivity	Not Applicable		< 5% S.P. up to 5 psi/sec upstream press. spike	Not Applicable	
Control Range	2-100% (Normally Closed Valve) 3-100% (Normally Open Valve)			2-100% (Normally Closed Valve)	
Multi Flo	Standard			---	
# of Bins	11 bins			---	
Valve Shut Down (N.C. Valve)[2,3]	Standard Hastelloy Valve: <1% of F.S Zero Leak By Valve: SH40 -SH41 < 0.02% F.S. SH42-SH50 <0.005% F.S.			Standard Hastelloy Valve: <1% of F.S.	
Valve Shut Down (N.O. Valve)	2% of F.S.			---	
Zero Stability	< ± 0.5% F.S. per year			< ± 0.6% F.S. per year	
Temperature Coefficient	Zero: 0.005% F.S. per °C; Span: 0.05% F.S. per °C				
Ratings					
Operating Temperature Range	10-50°C				
Differential Pressure Range[4]	3-860 sccm = 7-45 psid 861-7200 sccm = 10-45 psid 7201-55000 sccm = 15-45 psid			10 Torr - 30 psid typical For more details consult factory	
Maximum Operating Pressure	500 psia max		100 psia max	500 psia max	
Proof Pressure	700 psia max		140 psia max	700 psia max	
Design Pressure	800 psia max		170 psia max	800 psia max	
Burst Pressure	3000 psia max		500 psia max	3000 psia max	
Leak Integrity (external)	$1x10^{-10}$ atm. cc/sec He				
Mechanical					
Valve Type	Normally Closed (Standard or Zero Leak-by) Normally Open Meter (no valve)			Normally Closed	
Wetted Materials	SEMI F20 HP Compliant, 316L VIM/VAR, Hastelloy C-22, 316L Stainless Steel, 304 Stainless Steel, KM-45, PCTFE (on optional Zero leak Valve)				
Surface Finish	10µ inch Ra	5µ inch Ra			
Display & Diagnostics					
Status Lights	MFC Health, Network Status				
Alarms	Control Valve Output, Network Interruption				
Display Type	Top Mount Integrated LCD				
Viewing Angle / Viewing Distance	Fixed / 10 feet				
Units Displayed / Resolution	Flow (%), Temp. (oC), Pressure (psia, kPa) / 0.1 (unit)				

NOTE: Consult applications for accuracy and response for analog communications NOTE: See the following Safe Delivery System (SDS) section for optional detailed specifications

[1] Based on factory N_2 calibration

[2] The Zero Leak Valve can be ordered via Brooks CSR process

[3] Valve shut down full scale is defined as the MultiFlo full scale bin range or the full scale range of the factory configured gas & range devices.

[4] Argon gas applications require an additional 10 psid differential pressure. Devices greater than 30L require a 45psia minimum inlet pressure. Low vapor pressure gases require an inlet pressure of > 100 Torr, with vacuum on outlet (example $SiCl_4$). Contact Brooks Technical Support for more information.

Table 1-3 Specifications for GF100/GF120/GF125 Series with Analog and DNET communications (continued)

	GF100	GF120	GF125	GF120XSL	GF120XSD
Electrical					
Electrical Connection	RS485/Analog via 9-Pin "D" connector, DeviceNet™ via 5-Pin "M12" connector				
Digital Communication	RS485+ (model specific), DeviceNet (model specific), RS485 Diagnostic Port (all models)				
Diagnostics/Service Port	RS485 via 2.5mm jack				
Power Supply/ Consumption	DeviceNet: 545mA max. @ +11-25 Vdc., 250mA max. @ 24Vdc RS485/Analog: 6 Watts max @ ±15Vdc. (±10%) or +24 Vdc (±10%)				
Compliance					
EMC	EC Directive 2004/108/EC CE: EN61326: 2006 (FCC Part 15 & Canada IC-subset of CE testing) RoHS Directive (2011/65/EU) REACH Directive EC 1907/2006				
Environmental Compliance					

Table 1-4 Specifications for GF100/GF120/GF125 Series with EtherCAT Communications

	GF100	GF120	GF125	GF120XSL	GF120XSD
Performance					
Full Scale Flow Ranges	3 sccm to 55 slm			4 sccm to 25 sccm	>25 sccm to 1 slm
Flow Accuracy	±1% S.P. > 20-100%; ±0.2% F.S. 2-20%			±1% S.P. > 35-100%; ±0.35% F.S. 2-35%	
Repeatability & Reproducibility	5-100% = ± 0.15% of S.P. 2-5% = ± 0.015% of F.S.				
Flow Settling Time (NC Valve)	< 1 sec	700ms	300ms (3-860 sccm) 400ms (861-7200 sccm) 500ms (7201-30000 sccm) <700ms (30001-55000 sccm)	< 3 sec	
Flow Settling Time (N.O. Valve)	<1.5 sec			---	
Pressure Insensitivity	Not Applicable		< 1% S.P. up to 5 psi/sec upstream press. spike	---	
Control Range	2-100% (Normally Closed Valve) 3-100% (Normally Open Valve)			2-100% (Normally Closed Valve)	
MultiFlo	Standard			---	
# of Bins	11 bins			---	
Valve Shut Down (N.C. Valve)[2,3]	Standard Hastelloy Valve: <0.15% of F.S. Zero Leak By Valve: SH40 -SH41 < 0.02% F.S. SH42-SH50 <0.005% F.S.			Standard Hastelloy Valve: <0.15% of F.S.	
Valve Shut Down (N.O. Valve)	2% of F.S.			---	
Zero Stability	< ± 0.15% F.S. per year			< ± 0.6% F.S. per year	
Temperature Coefficient	Zero: 0.005% F.S. per °C; Span: 0.05% F.S. per °C				
Ratings					
Operating Temperature Range	10-50°C				
Differential Pressure Range[4]	3-860 sccm = 7-45 psid 861- 7200 sccm = 10-45 psid 7201-55000 sccm = 15-45 psid			10 Torr - 30 psid typical For more details consult factory	
Proof Pressure	700 psia max		140 psia max	700 psia max	
Design Pressure	800 psia max		170 psia max	800 psia max	
Burst Pressure	3000 psia max		500 psia max	3000 psia max	
Maximum Operating Pressure	500 psia max		100 psia max	up to 500 psia max	
Leak Integrity (external)	$1x10^{-10}$ atm. cc/sec He				
Mechanical					
Valve Type	Normally Closed (Standard or Zero Leak-by) Normally Open Meter (no valve)			Normally Closed	
Wetted Materials	SEMI F20 HP Compliant, 316L VIM/VAR, Hastelloy C-22, 316L Stainless Steel, 304 Stainless Steel, KM-45, PCTFE (on optional Zero leak Valve)				
Surface Finish	10µ inch Ra	5µ inch Ra			
Display & Diagnostics					
Status Lights	Run, Error, Power, Network Status				
Alarms	Control Valve Output, Network Interruption, Temperature High/Low, Pressure High/Low, Power Surge/Sag				
Display Type	Top Mount Integrated LCD				
Viewing Angle / Viewing Distance	Rotatable / 10 feet				
Units Displayed / Resolution	Flow (%), Temp. (°C), Pressure (psia, kPa) / 0.1 (unit)				

NOTE: See the following Safe Delivery System (SDS) section for optional detailed specifications

[1] Based on factory N_2 calibration

[2] The Zero Leak Valve can be ordered via Brooks CSR process

[3] Valve shut down full scale is defined as the MultiFlo full scale bin range or the full scale range of the factory configured gas & range devices.

[4] Argon gas applications require an additional 10 psid differential pressure. Devices greater than 30L require a 45psia minimum inlet pressure. Low vapor pressure gases require an inlet pressure of > 100 Torr, with vacuum on outlet (example $SiCl_4$). Contact Brooks Technical Support for more information.

Table 1-4 Specifications for GF100/GF120/GF125 Series with EtherCAT Communications (continued)

	GF100	GF120	GF125	GF120XSL	GF120XSD
Electrical					
Electrical Connection	Power via 5-pin M8 Connector, EtherCAT via RJ45 jacks				
Digital Communication	EtherCAT				
Diagnostics / Service Port	Micro-USB				
Power Supply / Consumption	320 mA max. @ 18-30 Vdc, 230 mA max. @ 24 Vdc (under typical operating conditions)				
Compliance					
EMC	EMC Directive 2014/30/EU Evaluation Standard EN61326-1:2013				
Environmental Compliance	RoHS Directive (2011/65/EU) REACH Directive EC (1907/2006)				

Table 1-5 Specifications for GF101/GF121/GF126 Series with Analog and DNET Communications

	GF101	GF121	GF126
Performance			
Full Scale Flow Range	55 slm to 300 slm		
Flow Accuracy	±1% S.P. > 35-100%; ±0.35% F.S. 2-35%		
Repeatability & Reproducibility	< ± 0.15% S.P.		
Response Time/Settling Time (N.C. Valve)	< 1 sec		
Pressure Insensitivity	Not Applicable		Ability to measure inlet pressure
Control Range	5-100% (Normally Closed Valve)		
MultiFlo	Standard		
#of Bins	4 bins		
Valve Shut Down (N.C. Valve)[2]	<2% of F.S. @30 N_2 psig/atm out		
Zero Stability	< ± 0.5% F.S. per year		
Temperature Coefficient	Zero: 0.005% F.S. per °C; Span: 0.05% F.S. per °C		
Ratings			
Operating Temperature Range	10-50°C		
Differential Pressure Range	30-90 psid		
Maximum Operating Pressure	Controller: 75 psig Meter: 150 psig		
Proof Pressure	700 psia		140 psia
Design Pressure	800 psia	700 psia	170 psia
Burst Pressure	3000 psia		500 psia
Leak Integrity (external)	$1x10^{-10}$ atm. cc/sec He		
Mechanical			
Valve Type	Normally Closed Meter (no valve)		
Wetted Materials	SEMI F20 HP Compliant, 316L VIM/VAR, Hastelloy C-22, 316L Stainless Steel, 304 Stainless Steel, KM-45		
Surface Finish	10µ inch Ra	5µ inch Ra	
Diagnostics & Display			
Status Lights	MFC Health, Network Status		
Alarms	Control Valve Output, Network Interruption		
Display Type	Top Mount Integrated LCD		
Viewing Angle / Viewing Distance	Fixed / 10 feet		
Units Displayed / Resolution	Flow (%), Temp. (°C), Pressure (psia, kPa) / 0.1 (unit)		
Electrical			
Electrical Connection	RS485/Analog via 9-Pin "D" connector, DeviceNet™ via 5-Pin "M12" connector		
Digital Communication	RS485+ (model specific), DeviceNet (model specific), RS485 Diagnostic Port (all models)		
Diagnostic / Service Port	RS485 via 2.5mm jack		
Power Supply / Consumption	DeviceNet: 545 mA max. @ +11-25 Vdc., 250mA max. @ 24 Vdc (Under typical operating conditions) RS485/Analog: 6 Watts max @ +15 Vdc. (+10%) (Under typical operating conditions)		
Compliance			
EMC	EC Directive 2004/108/EC CE: EN61326: 2006 (FCC Part 15 & Canada IC-subset of CE testing)		
Environmental Compliance	RoHS Directive (2011/65/EU) Reach Directive EC (1907/2006)		

[1] Based on factory N_2 calibration
[2] Valve shut down full scale is defined as the MultiFlo full scale bin range or the full scale range of the factory configured gas & range devices

Table 1-6 Specifications for GF101/GF121/GF126 Series with EtherCAT Communications

	GF101	GF121	GF126
Performance[1]			
Full Scale Flow Range	55 slm to 300 slm		
Flow Accuracy	±1% S.P. > 35-100%; ±0.35% F.S. 2-35%		
Repeatability & Reproducibility	< ± 0.15% S.P.		
Response Time/Settling Time (N.C. Valve)	< 1 sec		
Pressure Insensitivity	Not Applicable		Ability to measure inlet pressure
Control Range	5-100% (Normally Closed Valve)		
MultiFlo	Standard		
#of Bins	4 bins		
Valve Shut Down (N.C. Valve)[2]	<2% of F.S. @30 N_2 psig/atm out		
Zero Stability	< ± 0.15% F.S. per year		
Temperature Coefficient	Zero: 0.005% F.S. per °C; Span: 0.05% F.S. per °C		
Ratings			
Operating Temperature Range	10-50°C		
Differential Pressure Range	30-90 psid		
Maximum Operating Pressure	Controller: 75 psig Meter: 150 psig		
Proof Pressure	700 psia		140 psia
Design Pressure	800 psia		170 psia
Burst Pressure	3000 psia		500 psia
Leak Integrity (external)	$1x10^{-10}$ atm. cc/sec He		
Mechanical			
Valve Type	Normally Closed Meter (no valve)		
Wetted Materials	SEMI F20 HP Compliant, 316L VIM/VAR, Hastelloy C-22, 316L Stainless Steel, 304 Stainless Steel, KM-45		
Surface Finish	10µ inch Ra	5µ inch Ra	
Diagnostics & Display			
Status Lights	Run, Error, Power, Network Status		
Alarms	Control Valve Output, Network Interruption, Temperature High/Low, Pressure High/Low, Power Surge/Sag		
Display Type	Top Mount Integrated LCD		
Viewing Angle / Viewing Distance	Rotatable / 10 feet		
Units Displayed / Resolution	Flow (%), Temp. (°C), Pressure (psia, kPa) / 0.1 (unit)		
Electrical			
Electrical Connection	Power via 5-pin M8 Connector, EtherCAT via RJ45 jacks		
Digital Communication	EtherCAT		
Diagnostic / Service Port	Micro-USB		
Power Supply / Consumption	320 mA max. @ 18-30 Vdc, 230 mA max. @ 24 Vdc (under typical operating conditions)		
Compliance			
EMC	EMC Directive 2014/30/EU Evaluation Standard EN61326-1:2013		
Environmental Compliance	RoHS Directive (2011/65/EU) REACH Directive EC (1907/2006)		

[1] Based on factory N_2 calibration
[2] Valve shut down full scale is defined as the MultiFlo full scale bin range or the full scale range of the factory configured gas & range devices

Table 1-7 Specifications for GF120xHT Series

	GF120xHT
Performance[1,2]	
Full Scale Flow Range[3]	50 sccm to 5 slm
Flow Accuracy	±1% S.P. >35-100%, ±0.35% F.S. 2-35%
Repeatability & Reproducibility	5-100% = ±0.15% of S.P., 2-5% = ±0.015% of F.S.
Linearity	±0.5% F.S. (included in accuracy)
Response Time (Setting Time) Normally Closed Valve	< 1 sec
Control Range	2-100% (Normally Closed Valve)
Valve Shut Down (N.C. Valve)	<1% of F.S.
Zero Stability	< ± 0.5% F.S. per year
Temperature Coefficient[4]	Span: 0.05% F.S. per °C, Zero: 0.005% F.S. per °C
Ratings	
Operating Temperature Range[5]	45-150°C
Differential Pressure Range	33-860 sccm = 7-45 psid, 861- 5000 sccm = 10-45 psid
Maximum Operating Pressure	500 psia max
Proof Pressure	700 psia max
Design Presure	800 psia max
Burst Pressure	2500 psia max
Leak Integrity (External)	$1x10^{-10}$ atm. cc/sec He
Mechanical	
Valve Type	Normally Closed (Standard) Meter (No Valve)
Wetted Materials	SEMI F20 UHP Compliant, 316L VIM/VAR, Hastelloy C-22, 316L Stainless Steel, 304 Stainless Steel,KM-45
Surface Finish	5µ inch Ra
Diagnostics & Display	
Status Lights	Analog/RS485/DNET: MFC Health, Network Status ECAT: Run, Error, Power, Network Status
Alarms	Analog/RS485/DNET: Control Valve Output, Network Interruption ECAT: Control Valve Output, Network Interruption, Temperature High/Low, Pressure High/Low, Power Surge/Sag
Display Type[6]	Top Mount Integrated LCD
Viewing Angle / Viewing Distance[6]	Analog/RS485/DNET: Fixed/10 feet, ECAT: Rotatable/10 feet
Units Displayed / Resolution	Flow (%), Temp. (°C), Pressure (psia, kPa) / 0.1 (unit)
Electrical	
Electrical Connection	RS485/Analog via 9-Pin "D" connector, DeviceNet™ via 5-Pin "M12" connector, EtherCAT Power via 5-pin M8 Connector, EtherCAT via RJ45 jacks
Digital Communication	RS485+ (model specific), DeviceNet (model specific), EtherCAT (model specific)
Diagnostics/Service Port	RS485 via 2.5mm jack or micro-USB dependent on model
Power Supply/Consumption	DeviceNet: 550mA max. @ +11-25 Vdc., 300mA max. @ 24Vdc RS485/Analog: 6 Watts max @ +15Vdc. (+10%) or +24 Vdc (±10%) EtherCAT: 330mA max. @ 18-30 Vdc, 300 mA max. @ 24 Vdc (under typical operating conditions)
Compliance	
EMC	Analog/RS485/DNET: EC Directive 2004/108/EC CE: EN61326: 2006 (FCC Part 15 & Canada IC-subset of CE testing) EtherCAT: EMC Directive 2014/30/EU Evaluation Standard EN61326-1:2013
Environmental Compliance	RoHS Directive (2011/65/EU & 2015/863/EU) REACH Directive EC 1907/2006

[1]Based on factory N_2 calibration, reference conditions are as per SEMI E12 specification, standard pressure and temperature, consult applications for accuracy and response for analog communications

[2]Devices are sized per application specific conditions provided by the customer. Operating temperature and pressure provided by the customer are used in device calibration. Devices will be calibrated between 150T and 1500T inlet pressures.

[3]Consult factory for additional flow options.

[4]The temperature coefficient specification is applicable ±10°C from the calibration temperature listed on the product label and CoC.

[5]Operating temperature range is defined for the flow module, the remote electronics must be mounted at a low temperature location (50° C max).

[6]Applicable for those units with displays

GF100/GF120/GF125 Downport Configurations

Electrical Connector
G1/GX/TX Specific Dimensions

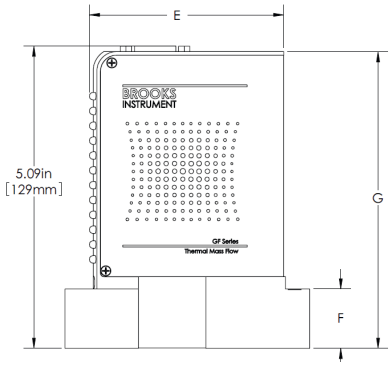

Electrical Connector
DX Specific Dimensions

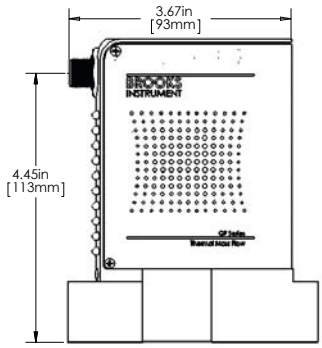

Electrical Connector
SX Specific Dimensions

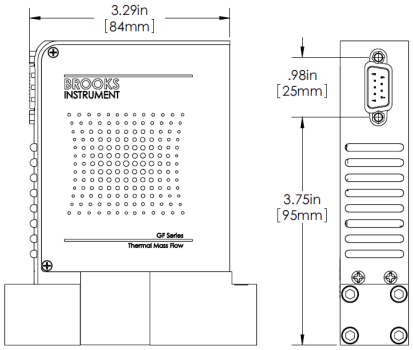

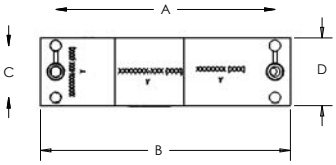

Fitting Option Code	Seal Type	Dim A	Dim B	Dim C	Dim D	Dim E	Dim F	Dim G
CX	C-SEAL	92mm [3.62in]	105mm [4.13in]	22mm [0.86in]	28mm [1.12in]	83mm [3.28in]	25mm [1.00in]	127mm [5.00in]
EX	W-SEAL	79.8mm[3.14in]	93mm [3.66in]	30mm [1.18in]	39mm [1.53in]	72mm [2.82in]	25mm [1.00in]	127mm [5.00in]
WX	W-SEAL	92mm [3.62in]	105mm [4.13in]	22mm [0.86in]	28mm [1.12in]	83mm [3.28in]	25mm [1.00in]	127mm [5.00in]
DX	C-SEAL	79.8mm[3.14in]	93mm [3.66in]	22mm [0.86in]	28mm [1.12in]	72mm [2.82in]	25mm [1.00in]	127mm [5.00in]
YX	W-SEAL	79.8mm[3.14in]	93mm [3.66in]	22mm [0.86in]	28mm [1.12in]	72mm [2.82in]	25mm [1.00in]	127mm [5.00in]
AX	C-SEAL	92mm [3.62in]	105mm [4.13in]	30mm [1.18in]	39mm [1.53in]	83mm [3.28in]	25mm [1.00in]	127mm [5.00in]
BX	W-SEAL	92mm [3.62in]	105mm [4.13in]	30mm [1.18in]	39mm [1.53in]	83mm [3.28in]	25mm [1.00in]	127mm [5.00in]
LX	C-SEAL	92mm [3.62in]	105mm [4.13in]	22mm [0.86in]	28mm [1.12in]	83mm [3.28in]	25mm [1.00in]	127mm [5.00in]

GF100/GF120/GF125 Face Seal Configurations

Electrical Connector
G1/GX/TX Specific Dimensions

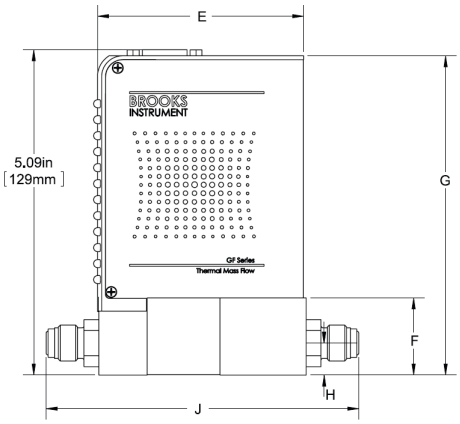

Electrical Connector
DX Specific Dimensions

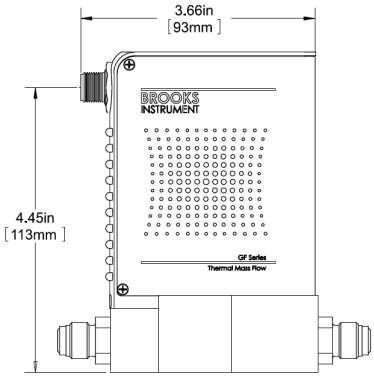

Electrical Connector
SX Specific Dimensions

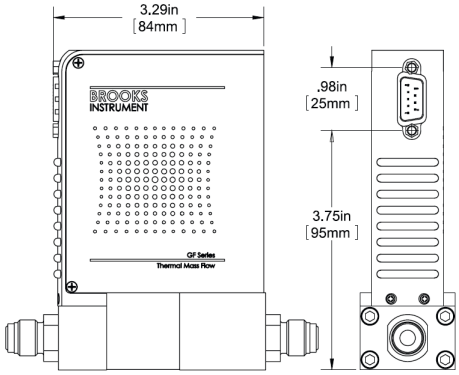

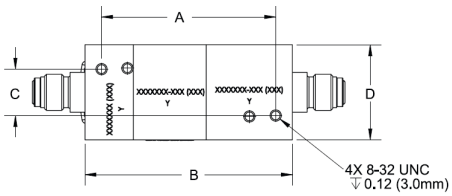

Fitting Option Code	VCR	Dim A	Dim B	Dim C	Dim D	Dim E	Dim F	Dim G	Dim H	Dim J
VX	1/4"	69mm [2.72in]	82mm[3.24in]	18mm [0.72in]	38mm [1.48in]	83mm [3.28in]	31mm [1.21in]	127mm [5.0in]	13mm [0.50in]	124mm [4.88in]
VS	1/4"	69mm [2.72in]	82mm[3.24in]	18mm [0.72in]	28.4mm [1.12in]	83mm [3.28in]	31mm [1.21in]	127mm [5.0in]	13mm [0.50in]	124mm [4.88in]

Figure 1-3 Dimensions - GF100/GF120/GF125 Series

GF101/GF121/GF126 Downport Configurations

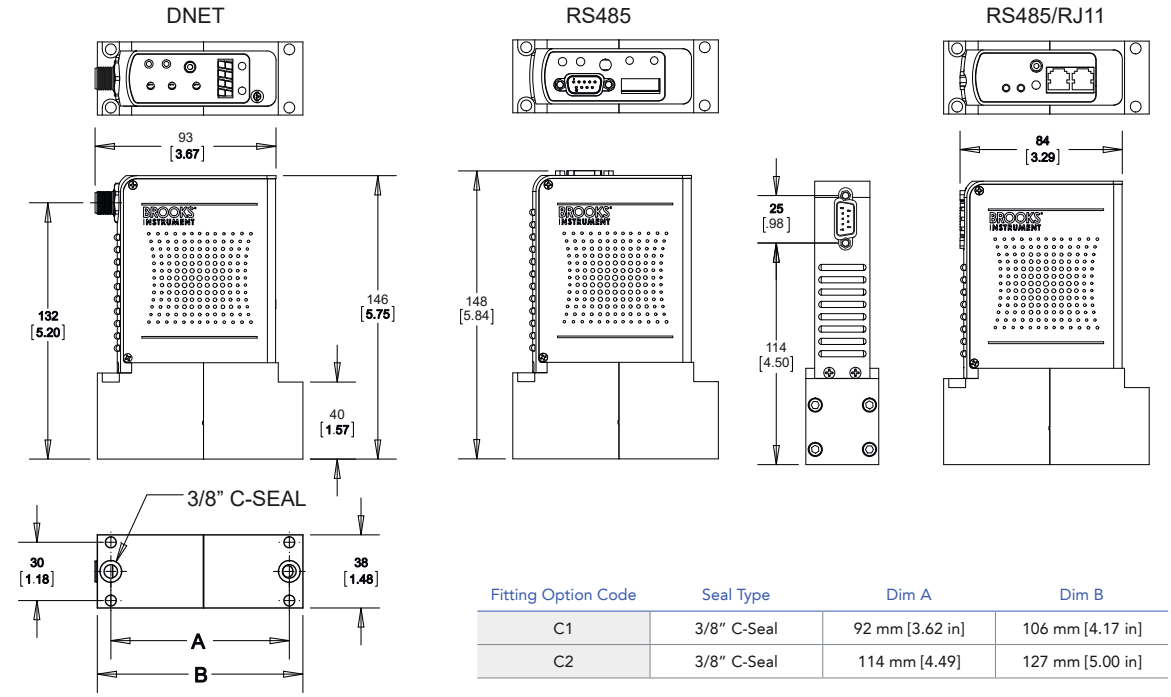

Fitting Option Code	Seal Type	Dim A	Dim B
C1	3/8" C-Seal	92 mm [3.62 in]	106 mm [4.17 in]
C2	3/8" C-Seal	114 mm [4.49]	127 mm [5.00 in]

GF101/GF121/GF126 Face Seal Configurations

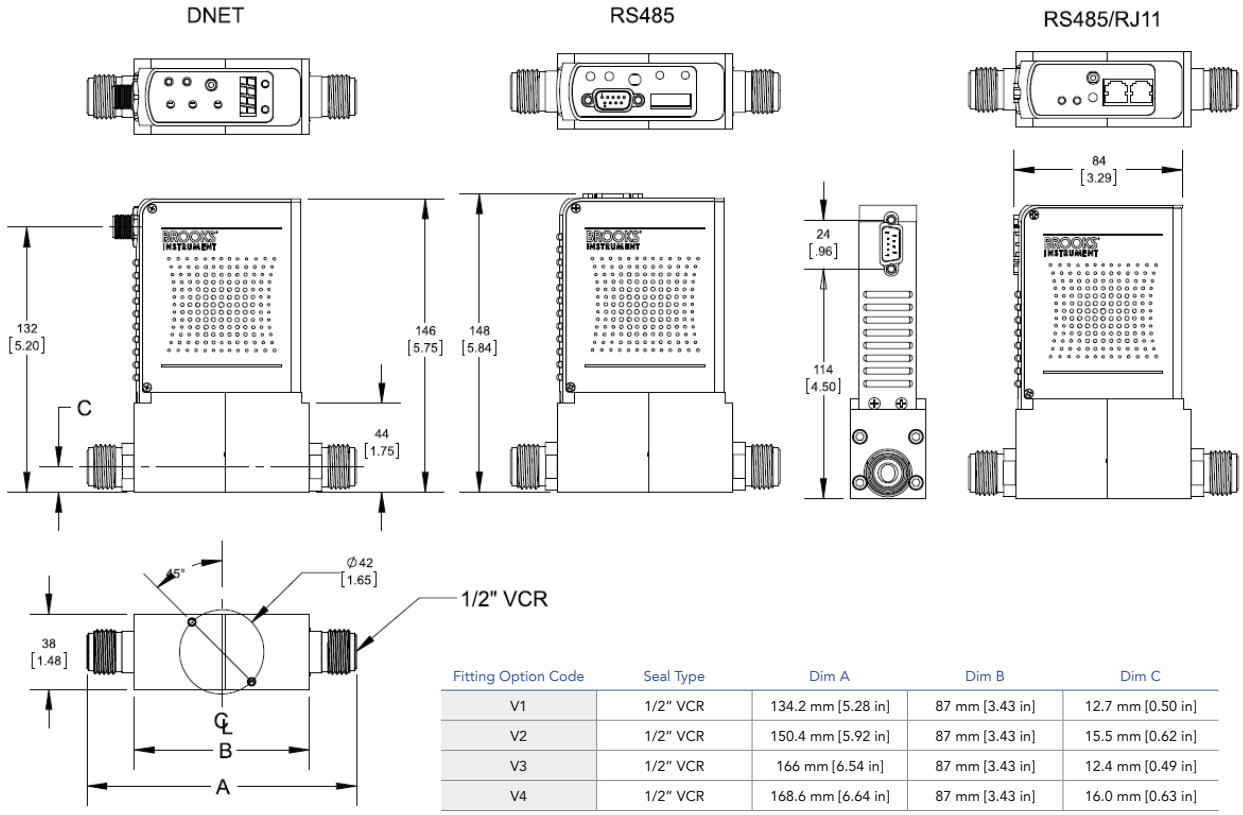

Fitting Option Code	Seal Type	Dim A	Dim B	Dim C
V1	1/2" VCR	134.2 mm [5.28 in]	87 mm [3.43 in]	12.7 mm [0.50 in]
V2	1/2" VCR	150.4 mm [5.92 in]	87 mm [3.43 in]	15.5 mm [0.62 in]
V3	1/2" VCR	166 mm [6.54 in]	87 mm [3.43 in]	12.4 mm [0.49 in]
V4	1/2" VCR	168.6 mm [6.64 in]	87 mm [3.43 in]	16.0 mm [0.63 in]

Figure 1-4 Dimensions - GF101/GF121/GF126 Series

EtherCAT, Downport Configurations

GF100/120/125

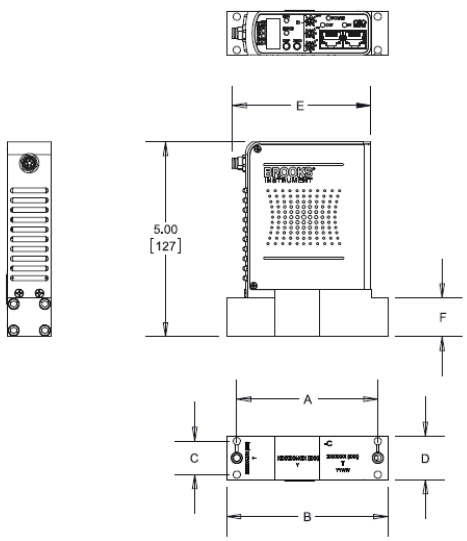

GF101/121/126

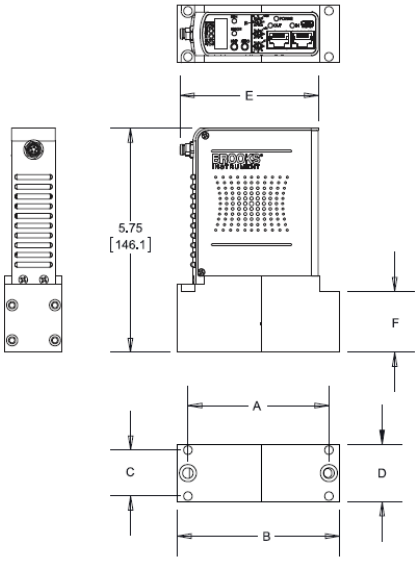

Fitting Option Code	Model	Seal Type	Dim A	Dim B	Dim C	Dim D	Dim E	Dim F
CX	GF100/120/125	C-Seal	3.62 [92]	4.13 [105]	0.86 [21.7]	1.12 [28.4]	3.55 [90.2]	1.00 [25.4]
WX	GF100/120/125	W-Seal	3.62 [92]	4.13 [105]	0.86 [21.7]	1.12 [28.4]	3.55 [90.2]	1.00 [25.4]
C1	GF101/121/126	C-Seal	3.62 [92]	4.17 [106]	1.18 [30]	1.48 [37.6]	3.55 [90.2]	1.57 [39.8]
C2	GF101/121/126	C-Seal	4.49 [114]	5.00 [127]	1.18 [30]	1.48 [37.6]	3.55 [90.2]	1.57 [39.8]

NOTE: [ ] ALTERNATIVE DIMENSION UNITS ARE FOR REFERENCE ONLY.

EtherCAT, Face Seal Configurations

GF100/120/125

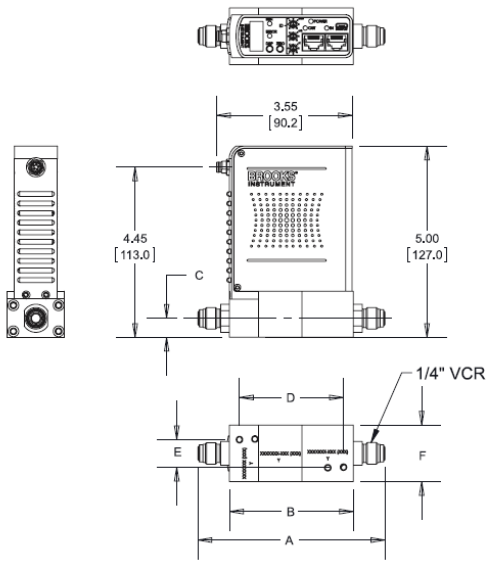

GF101/121/126

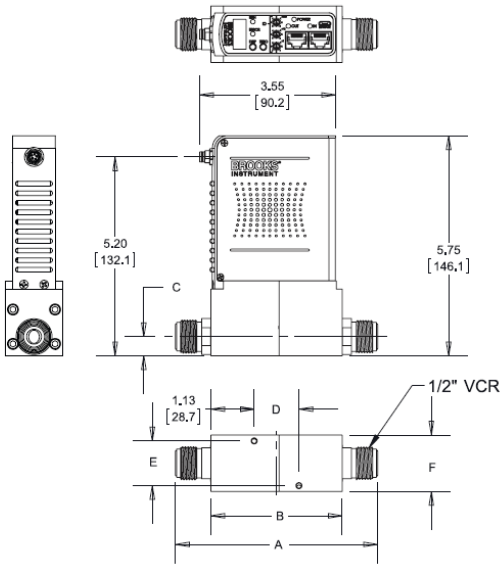

Fitting Option Code	Model	VCR	Dim A	Dim B	Dim C	Dim D	Dim E	Dim F
VS	GF100/120/125	1/4"	4.88 [124]	3.24 [82]	0.50 [12.7]	2.72 [69]	0.72 [18]	1.12 [28.4]
VX	GF100/120/125	1/4"	4.88 [124]	3.24 [82]	0.50 [12.7]	2.72 [69]	0.72 [18]	1.48 [37.6]
V1	GF101/121/126	1/4"	5.28 [134.2]	3.43 [87]	0.50 [12.7]	1.17 [29.7]	1.17 [29.7]	1.48 [37.6]

NOTE: [ ] ALTERNATIVE DIMENSION UNITS ARE FOR REFERENCE ONLY.

Figure 1-5 Dimensions - GF100/GF120/GF125, GF101/GF121/GF126 Series with EtherCAT Communications

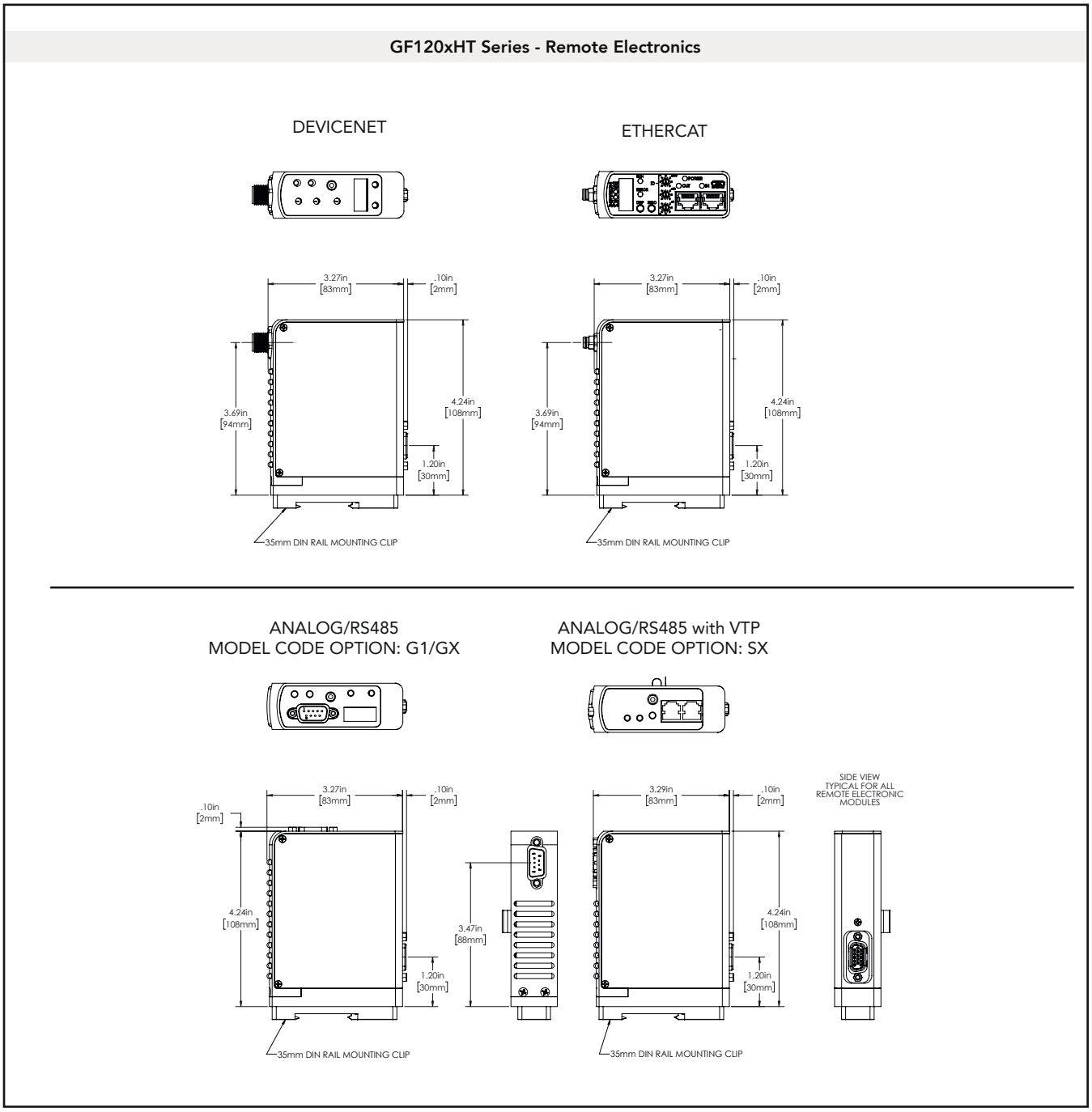

Figure 1-6 Dimensions - GF120xHT Series

GF120xHT Series - Flow Module Configurations

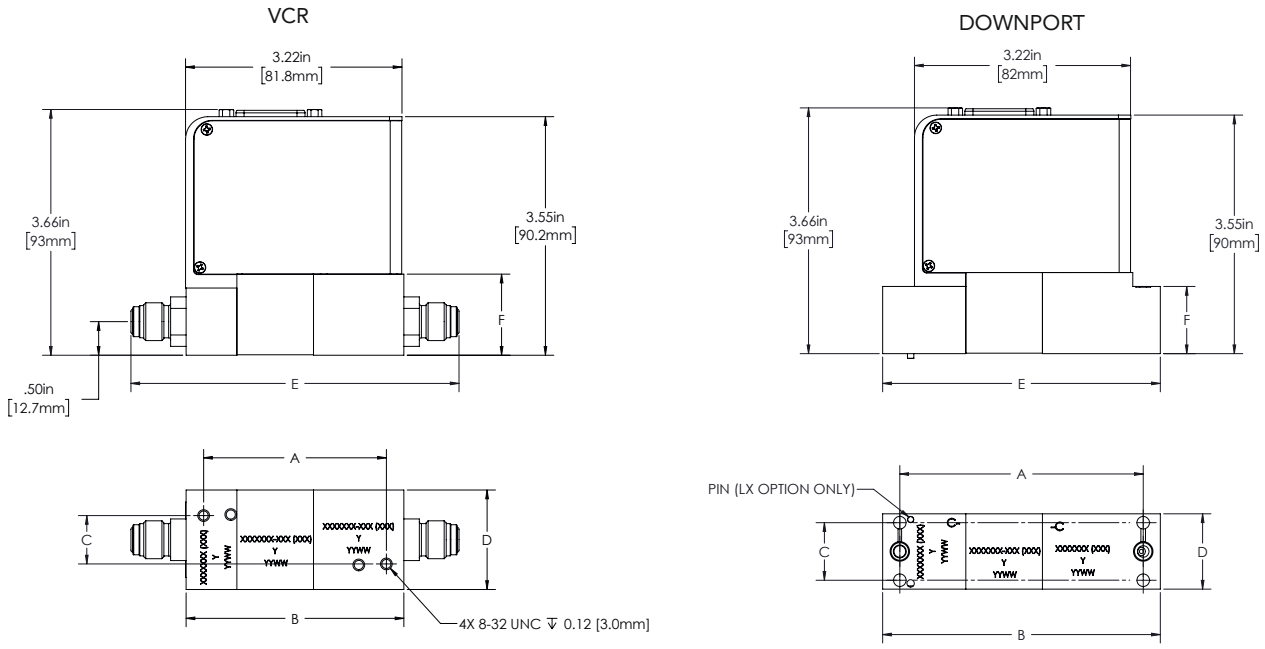

Fitting Option Code	Dim A	Dim B	Dim C	Dim D	Dim E	Dim F
VX	69mm [2.72in]	82mm [3.24in]	18mm [0.72in]	38mm [1.48in]	124mm [4.88in]	31mm [1.21in]
VS	69mm [2.72in]	82mm [3.24in]	18mm [0.72in]	28mm [1.12in]	124mm [4.88in]	31mm [1.21in]
CX	92mm [3.62in]	105mm [4.13in]	22mm [0.86in]	28mm [1.12in]	105mm [4.13in]	25mm [1.00in]
WX	92mm [3.62in]	105mm [4.13in]	22mm [0.86in]	28mm [1.12in]	105mm [4.13in]	25mm [1.00in]
BX	92mm [3.62in]	105mm [4.13in]	30mm [1.18in]	38mm [1.48in]	105mm [4.13in]	25mm [1.00in]
LX	92mm [3.62in]	105mm [4.13in]	22mm [0.86in]	28mm [1.12in]	105mm [4.13in]	25mm [1.00in]

Figure 1-6 Dimensions - GF120xHT Series (Continued)

General

This section provides installation instructions for the Brooks GF100/GF120xHT/GF101 Series Thermal Mass Flow Devices. The installation process consists of purging the gas supply line prior to installation, unpacking and inspecting the device, connecting the device to the gas supply line and testing for leaks.

Receipt of Equipment

When the equipment is received, the outside packing case should be checked for damage incurred during shipment. If the packing case is damaged, the local carrier should be notified at once regarding his liability. A report should be submitted to the nearest Brooks Instrument location listed on the Global Service Network page on our website:

BrooksInstrument.com/GlobalSupportCenters

This device has been assembled, calibrated, and double-vacuum bagged in a Class 100 clean room. In your semi-clean area, remove the outer bag only. Pass the device into your clean area. Remove the second clean room compatible bag only when the device is ready to be tested and/or installed in your clean system.

Recommended Storage Practice

If intermediate or long-term storage of the device is required, it is recommended that it be stored in accordance with the following conditions:

- Within the original shipping container.
- Ambient temperature 21°C (70°F) nominal, 32°C (90°F) maximum, 7°C (45°F) minimum.
- Relative humidity 45% nominal, 60% maximum, 25% minimum.

Return Shipment

Prior to returning any instrument to the factory for any reason, visit our website for instructions on how to obtain a Return Materials Authorization Number (RMA #) and complete a Decontamination Statement to accompany it: BrooksInstrument.com/Service. All instruments returned to Brooks also require a Material Safety Data Sheet (MSDS) for the fluid(s) used in the instrument. Failure to provide this information will delay processing of the instrument.

Instrument must have been purged in accordance with the following:

⚠ WARNING

Before returning the device, purge thoroughly with a dry inert gas such as Nitrogen before disconnecting process connections. Failure to correctly purge the instrument could result in fire, explosion or death. Corrosion or contamination may occur upon exposure to air.

Transit Precautions

To safeguard against damage during transit, transport the device to the installation site in the same container used for transportation from the factory, if circumstances permit.

Removal from Storage

Upon removal of the device from storage, a visual inspection should be conducted to verify its "as-received" condition. If the device has been subject to storage conditions in excess of those recommended (refer to "Recommended Storage Practice" on p. 24), it should be subjected to a pneumatic pressure test in accordance with applicable vessel codes. To maintain a device's ultra clean integrity, this service should be performed by the factory or one of the certified service centers.

Gas Connections

Prior to installation, ensure that all piping is clean and free from obstructions. Install piping in such a manner that permits easy access to the device if removal becomes necessary.

In-Line Filter

It is recommended that an in-line filter be installed upstream from the device to prevent the possibility of any foreign material entering the flow sensor or control valve. The filtering element should be replaced periodically or ultrasonically cleaned.

Mechanical Installation

⚠ CAUTION

When installing the Mass Flow Controller or Meter, care should be taken that no foreign materials enter the inlet or outlet of the instrument. Do not remove the protective end caps until the time of installation.

The recommended installation procedure guidelines are as follows:

- The device should be located in a clean, dry atmosphere relatively free from shock and vibration.
- Leave sufficient room for access to the user interface, display and MAC ID and baud rate switches (if equipped) at the top of the device.
- Install the device in such a manner that permits easy purge and removal if the device requires servicing.

⚠ CAUTION

When used with a reactive (sometimes toxic) gas, contamination or corrosion may occur as a result of plumbing leaks or improper purging. Plumbing should be checked carefully for leaks and the instrument purged with clean, dry N_2 before use.

The GF125 Series is equipped with PTI technology, which reduces the effect of pressure fluctuations on gas flow. In PTI technology, a signal from an integrated pressure transducer is combined with the standard thermal sensor output. The combined signals allow precise and stable flow, even when the line pressure is fluctuating.

The GF100/GF101 Series also utilizes MultiFlo® technology that allows the user to configure standard configurations (“SHs”) or “blanks” for a variety of pure gases and mixtures. As a result, MultiFlo® technology enables the user to reduce unique inventory requirements.

Flow Controller Installation Arrangement

Typical gas supply arrangements are shown in Figures 2-1 and 2-2. GF are often arranged inside a gas panel. Configure standard configurations (“SHs”) or “blanks” for a variety of pure gases and mixtures. As a result, MultiFlo technology enables the user to reduce unique inventory requirements.

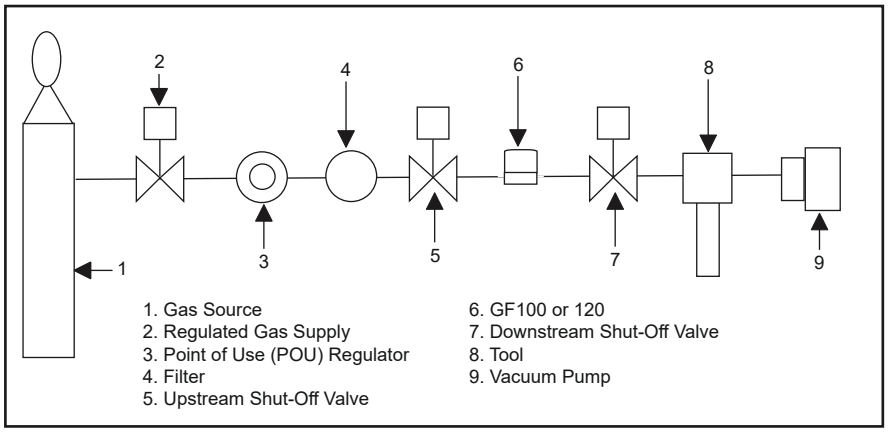

Figure 2-1 Typical Gas Supply Arrangement with Non-PTI MFC

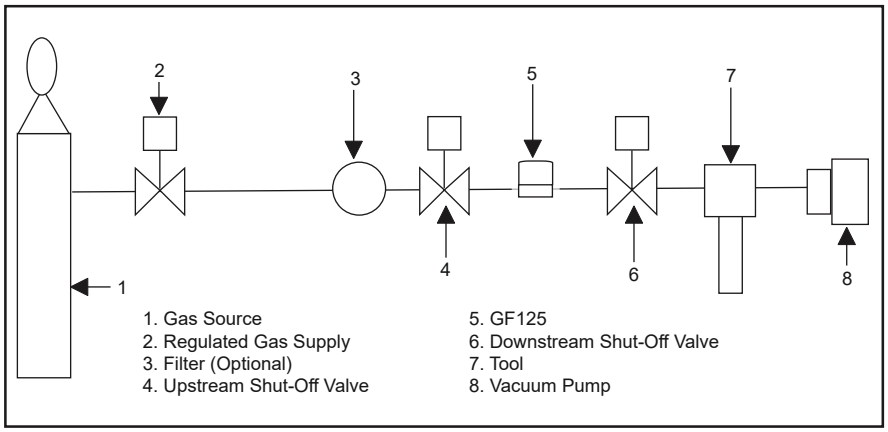

Figure 2-2 Typical Gas Supply Arrangement with PTI MFC

Purge the Gas Supply Line Before GF100/GF120xHT/GF101 Series Installation

⚠ CAUTION

For additional safety, it is recommended to close the two valves between the charged gas line and the GF100/GF120xHT/GF101 Series to be installed. See Figures 2-1 and 2-2 for more details.

⚠ NOTICE

It is recommended to archive service and calibration documentation for the GF100/GF120xHT/GF101 Series in order to determine the contamination state of each gas line and to assist service personnel.

⚠ CAUTION

DO NOT remove the shipping caps covering the inlet/outlet for Face Seal fittings, or DO NOT remove the blue tape on the bottom of the device for downported fittings before the GF100/GF120xHT/GF101 Series is actually being installed. Failure to comply will introduce contaminants into the GF100/GF120xHT/GF101 Series.

Before operating the GF100/GF120xHT/GF101 Series, the gas supply line must be completely purged with nitrogen or argon to ensure the line is free from toxic or flammable gases, contaminants, moisture, and oxygen. The purge gas must be free of moisture and oxygen to less than 100 ppb. Purge the gas lines as follows or in accordance to prescribed company and safety procedures.

1. Shut off the process gas supply valve(s) upstream of the GF100/GF120xHT/GF101 Series. If such a valve is not available, shut the valve on the gas panel. Tag the valve at this point to prevent accidental re-exposure of the process gas to the gas line.

2. Cycle purge the gas line with dry nitrogen or argon to fully flush out the process gas. Cycle purging consists of evacuating to a low pressure adequate to induce out-gassing and then purging to remove adhered moisture and oxygen. If a toxic or reactive gas is present and a clogged GF Series is suspected, then proceed with caution. Pump down and purge the GF100/GF120xHT/GF101 Series from both downstream and upstream lines. If check valves are present in the gas line, both pumping down and purging are required. Pumping down without purging is inadequate. If a good vacuum source is not available, the GF100/GF120xHT/GF101 Series can be de-contaminated by purge only.

3. Repeat the purge cycle several times within 2-4 hours to complete the cleaning. For toxic and corrosive gasses, it is recommended to use 100-120 cycles.

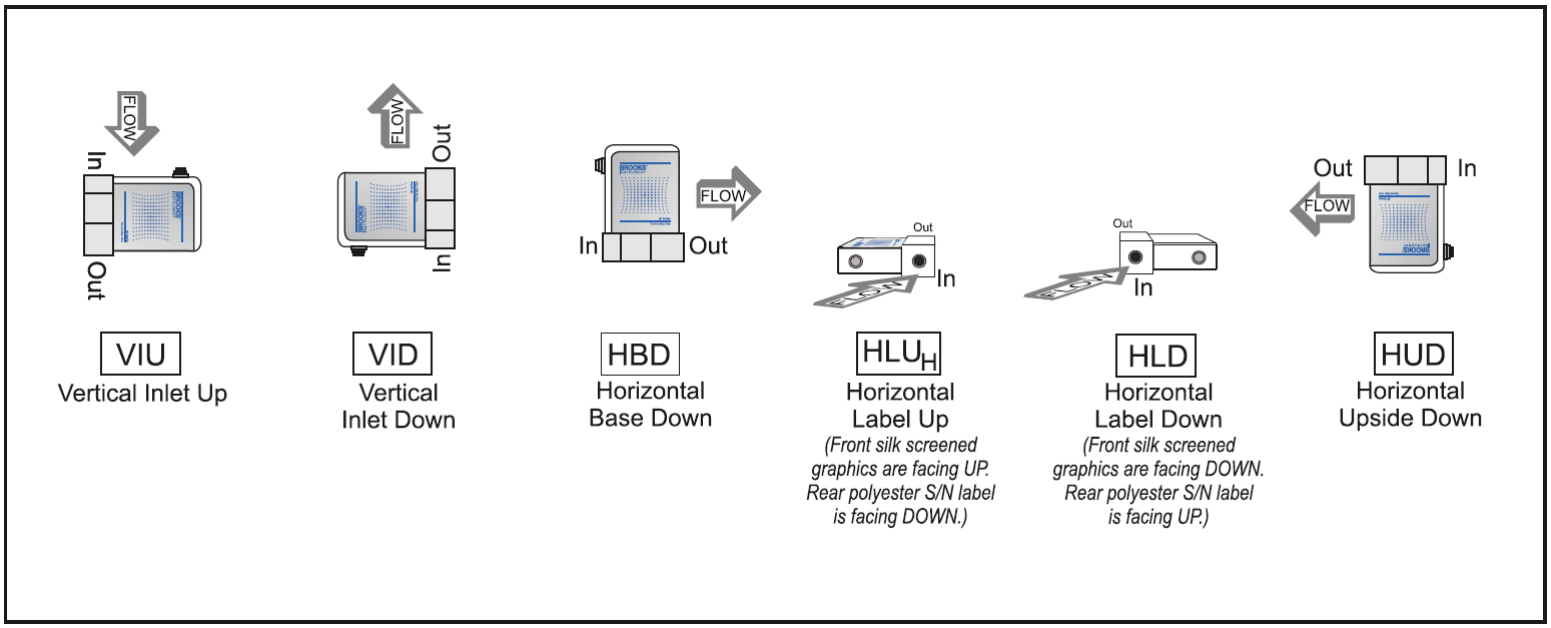

Figure 2-3 GF100 Series Mounting Attitude Positions

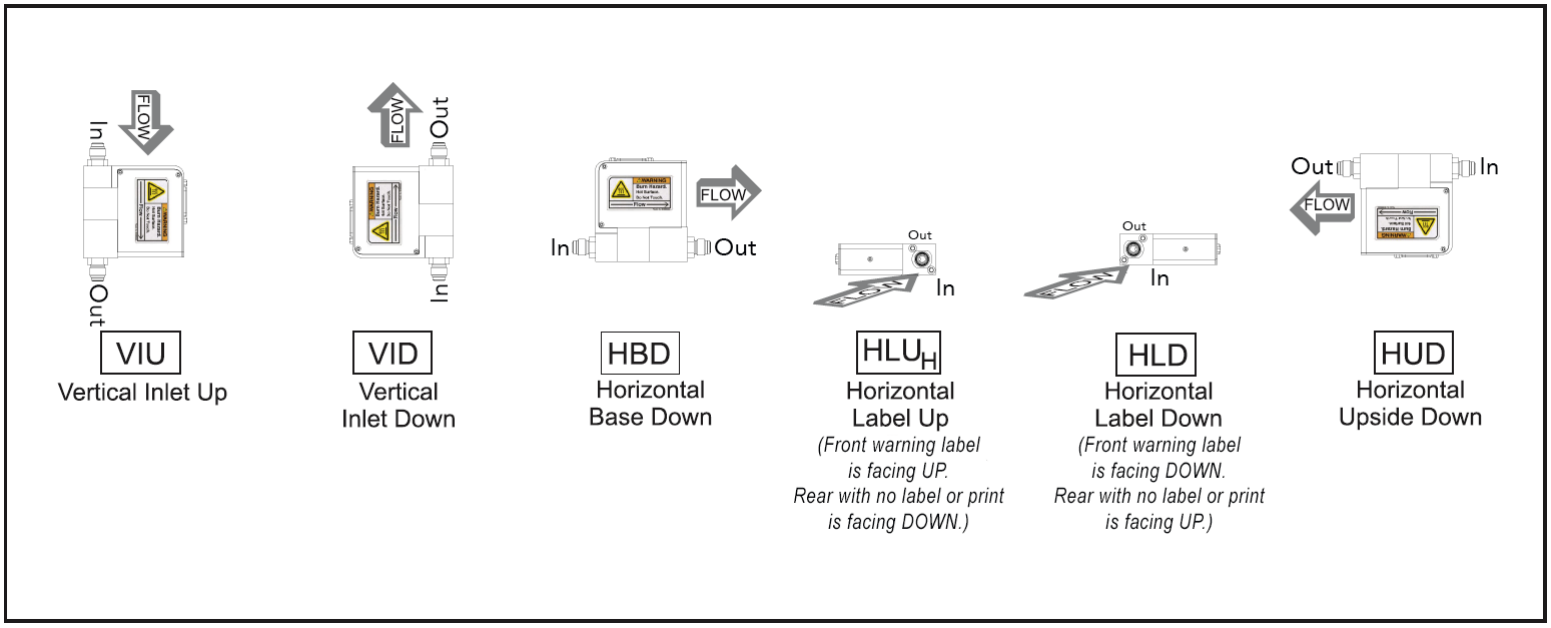

Figure 2-4 GF120xHT Series Mounting Attitude Positions

Position and Mount the GF100/GF120xHT/GF101 Series

Position the GF100/GF120xHT/GF101 Series so that the gas flow is pointed in the direction of the flow arrow on the GF100/GF101 Series rear S/N label. The various mounting positions are described in Figure 2-3 The standard orientation for the GF100/GF101 Series is Horizontal Base Down (HBD). For the GF120xHT series please reference Figure 2-4. GF120xHT series the standard configuration is also Horizontal Base Down (HBD) Note: For the GF120xHT series this product can be calibrated in the desired orientation via to reduce offsets observed due to thermal siphoning, please contact factory or technical support for more information. The GF125/GF126 employ a proprietary algorithm that utilizes the internal pressure sensor to compensate for potential orientation effects when the MFC is used with certain higher density gases. Non HBD mounting orientations can be selected by using the MultiFlo software.

In the case of the GF100/GF101/GF120/GF121/GF120xHT, which does not have an internal pressure sensor, it is recommended that the MFC is re-zeroed with process gas following the recommended Brooks procedure (see zeroing bulletin FSB-001-0015 for further information).

If your GF100/GF120xHT/GF101 Series is configured with downported fittings, follow Steps 1 though 4 below. If your GF100/GF120xHT/GF101 Series has Face Seal fittings, proceed to Step 5.

1. Refer to Figure 2-5. If downported fittings (1) are used, the GF100/GF120xHT/GF101 Series is mounted to K1 Series substrate blocks (2) with four screws (3). Metal C-seals or W-seals (4) (as provided by integrator) are inserted between the GF100/GF120xHT/GF101 Series and substrate blocks before the screws are installed. These metal seals must be replaced after each installation.

2. Select the mounting screws noted in Table 2-1 below for downported devices. M4 screws are used on 1.125” devices, K1S. M5 screws are used on 1.5” devices, K1R2 and K1H.

3. Refer to Figure 2-5. Insert the two mounting seals (4) over the gas flow path of the K1 block. Carefully align the GF100/GF120xHT/GF101 Series mounting holes onto the K1 substrate blocks. Using your fingers, install the screws through the GF100/GF120xHT/GF101 Series fitting and hand tighten.

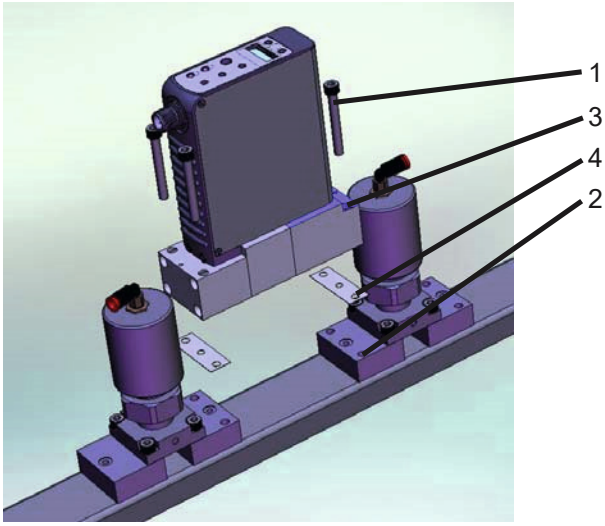

Figure 2-5 GF100 Series Mounted to K1 Series Substrate Blocks

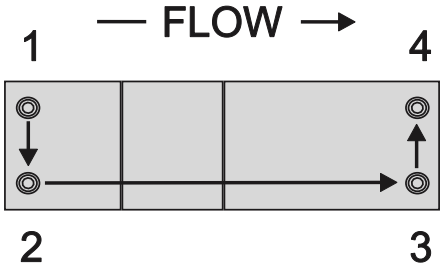

Figure 2-6 Mounting Screws Torque Pattern*

Table 2-1 K1 Series Fasteners*

Connection	Fastener Size		
	K1S	K1R2	K1H
GF100/ GF120xHT/ GF101 Series to Substrate	M4 x 34mm or M4 x 35mm	M5 x 30mm	M5 x 37mm

Table 2-2 K1 Substrate Torque Data*

Connection	Torque Pattern	Torque (Inch-Pounds)		
		K1S	K1R2	K1H
GF100/ GF120xHT/ GF101 Series to Substrate	Use a square pattern as shown in Figure 2-5.Start at 25 inch-pounds and increase in increments of 10 inch-pounds until proper value is obtained.	45	45	45

4. Using a torque wrench and a metric hex key, tighten the screws to the torque value as described in Table 2-2 and Torque Pattern Figure 2-6.

5. If your GF100/GF120xHT Series is configured with ¼” Face Seal fittings, secure the GF100/ GF120xHT Series block to the gas panel with two, 8-32-UNC-2B” screws. Then connect the inlet/ outlet fittings to the gas supply line using two wrenches. Tighten the fittings to manufacturer recommendations.

* Torquing methodology is the responsibility of the tool manufacturer

Perform a Leak Test

⚠ WARNING

Before operating the flow controller, ensure all gas connections have been properly tightened and, where applicable, all electrical connections have been properly terminated.

It is critical to leak test the gas supply lines and GF100/GF120xHT/GF101 Series connections before turning on the process gas supply after any new installation. Check for leaks using a helium leak detector or any other appropriate leak test method. Follow leak test specifications as defined by integrator.

Zeroing Setup Process

The following steps are required before the GF100/GF120xHT/GF101 Series is zeroed.

1. Make sure that the GF100/GF120xHT/GF101 Series has been installed inside the equipment (panel) for at least four hours and powered up at least one hour prior to zeroing. This ensure that the GF100/GF120xHT/GF101 Series is in its “use attitude” and is operating at normal temperature. If the GF100/GF120xHT/GF101 Series is subjected to a vacuum purge for more than one minute, turn off the GF100/GF120xHT/GF101 Series (ie., provide a zero setpoint) for a time period of twice the vacuum purge time. Note: For optimal operating conditions of the GF120xHT product, this product should be zeroed and utilized at the calibration temperature listed on the product label.

2. Refer to Figure 2-1. Open the upstream shut-off valve (5) and close the downstream shut-off valve (7). This eliminates a pressure drop across the GF100/GF120xHT/GF101 Series and subsequent leakage from the PID control valve inside the GF100/GF120xHT/GF101 Series.

3. Provide a 100% setpoint to the GF Series for no longer than 60 seconds. This equalizes the pressure across the PID control valve.

4. Refer to Figure 2-1. Close the upstream shut-off valve (5) to prevent any pressure effects from the regulator (3).

5. Close the GF100/GF120xHT/GF101 Series and wait two minutes.

6. Read the output signal of the GF100/GF120xHT/GF101 Series. This output signal is the initial flow in percent of full scale. The output signal should be 0.0 (± 0.1%). If the output signal is too high, re-zero the GF100/GF120xHT/GF101 Series as described in the section below.

Zeroing the GF100/GF120xHT/GF101 Series

Many high density gases exhibit slight changes in zero output as a function of inlet pressure. Gases such as tungsten hexafluoride and many fluorocarbons are especially sensitive to this problem. Since inlet pressure is a potential source for zero errors, the pressure transducer on each GF125/GF126 Series should be correctly set to zero after installation. The zeroing process is performed from the backlight LCD display on top of the GF100/GF120xHT/GF101 Series.

OEM tools using a microprocessor or computer for operating the GF100/GF120xHT/GF101 Series should sequence the GF100/GF120xHT/GF101 Series off between processes. To accomplish this, simply provide a zero set point. The GF100/GF120xHT/GF101 Series will shut off automatically.

⚠ NOTICE

Make sure you perform the zeroing set-up process outlined in "Zeroing Setup Process" before zeroing the GF100/GF120xHT/GF101 Series.

Shut-off valves, whether upstream or downstream from the GF100/GF120xHT/GF101 Series, should be programmed to turn on before the GF100/GF120xHT/GF101 Series is turned on and turned off after the GF100/GF120xHT/GF101 Series is turned off.

Zeroing the GF125/GF126 Series Pressure Transducer from the LCD Display Panel

1. Place the GF125/GF126 Series under a strong vacuum with the GF125/GF126 Series set to 100% set point. Make sure that upstream valve is closed and the downstream valve is open. Allow time for the upstream pressure to bleed off.

2. Looking at the top of the GF125/GF126 Series, press the "Display" button, starting at the MACID, four times to "PSI" or five times to "kPa" or until the LCD displays the labels "PSI" or "kPa". The GF125/GF126 Series will display pressure in units of PSIA or kPa. Press and hold down the Zero button a minimum of 5 seconds or until the display reads 0.000, with the last two digits flickering at different values. The pressure transducer zeroing procedure can be done while the display is either in PSIA or kPA output. Refer to Figure 2-7.

Figure 2-7 Display with PSI Reading

After completion of the pressure transducer zeroing, the LCD display will read 0.0 with the last two digits flickering as shown in Figure 2-8.

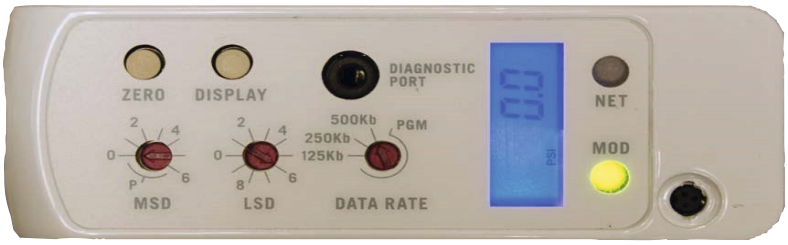

Figure 2-8 Display Reading Zero PSI

Zeroing GF100/GF120xHT/GF101 Series Flow from LCD Display Panel

1. Place the GF100/GF120xHT/GF101 Series under normal inlet operating pressure. Close the down stream valve to prevent any flow.

2. Looking at the top of the GF100/GF120xHT/GF101 Series, press the “Display” button until the LCD display label is “%FS” as shown in Figure 2-9. Three button depressions from the MACID label display.

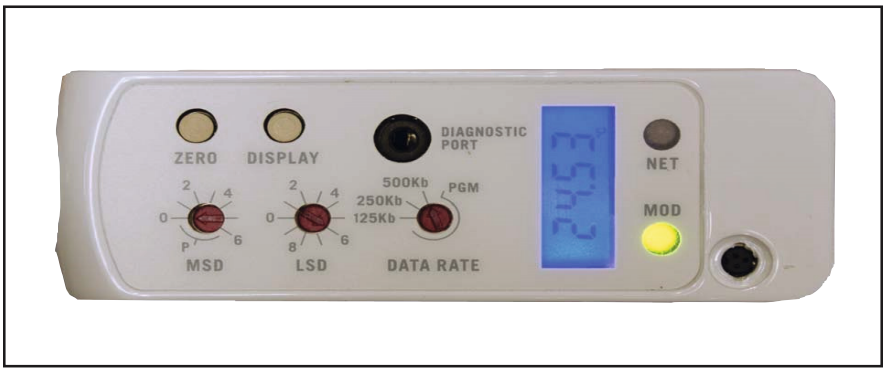

Figure 2-9 Display Set to %FS

3. Press and hold down the Zero button for a minimum of 5 seconds or until the “%FS” display reads 0.0 as shown in Figure 2-10. The %FS label will flash during this procedure.

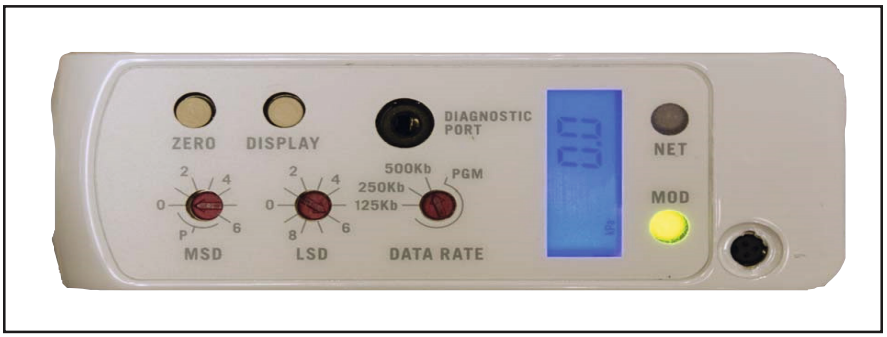

Figure 2-10 % Flow Display Set to Zero

Performance Checks

This section describes how to zero and sequence the GF100/GF120xHT/GF101 Series devices for proper operation.

⚠ NOTICE

If the GF100/GF120xHT/GF101 Series has been in the purge mode for a long period of time, wait until the GF100/GF120xHT/GF101 Series has cooled down before zeroing. The cool down period should be - 30 minutes for purges up to five minutes and at least 60 minutes after purging overnight.

- The GF100/GF120xHT/GF101 Series must be warmed up for at least 30 minutes.
- The active gas page must be correct.
- The GF125/GF126 Series pressure transducer must be correctly zeroed.
- The GF100/GF120xHT/GF101 Series flow must be correctly zeroed.

Introduction to the MultiFlo™ Configurator

The MutliFlo Configurator application is used to configure the gas and range of the GF Series devices. The following section describes the MultiFlo Configurator and its uses.

Using the MultiFlo™ Configurator

The MultiFlo Configurator application allows communication to GF Series devices through personal computer with serial COM Port and a Windows 10, Windows 7 or Windows XP operating system. It's primary function is to configure gas and flow ranges within six defined standard configurations. Flow ranges are configured to the Nitrogen equivalent.

Using the MultiFlo Configurator software, configure the gas and flow rate according to Table 2-3.

Table 2-3 Gas and Flow Ranges - MultiFlo Configurable - N2 Equivalent

GF Series	Standard MG-MR Bin Configurations	Flow range Code	Gas Flow Range (N2 Equivalent)
GF100 series from SH40-SH50 bins	SH40	010C	3-10 sccm
	SH41	030C	11-30 sccm
	SH42	092C	31-92 sccm
	SH43	280C	93-280 sccm
	SH44	860C	281-860 sccm
	SH45	2.6L	861-2600 sccm
	SH46	7.2L	2601-7200 sccm
	SH47	015L	7201-15000 sccm
	SH48	030L	15001-30000 sccm
	SH49	040L	30001-40000 sccm
	SH50	055L	40001-55000 sccm
GF 101 Series from SH51 - SH54	SH51	055L	55001 sccm
	SH52	100L	55002 - 100000 sccm
	SH53	200L	100001- 200000 sccm
	SH54	300L	200001-300000 sccm

The MultiFlo Configurator interfaces to the GF Series device through RS485 or DeviceNet communications. There are various ways to connect the device regardless of device configuration. Devices may be connected through the diagnostic port using cables in one of the two Basic MultiFlo Configurator Kits or DeviceNet devices can alternatively be connected using a National Instruments or SST DeviceNet scanner card.

778Z010ZZZ Basic MultiFlo Configurator Kit
124Y211AAA BEST/MultiFlo-USB-RS485

778Z011ZZZ Basic MultiFlo Configurator Kit w/Power Supply and Adapter Cables
124Y211AAA BEST/MultiFlo-USB-RS485
A332295001 Power Supply MFC
A332297002 Cable, Power, 9-Pin
A332297001 Cable, Power, DeviceNet

Connect the MultiFlo Cable Adapter 2.5mm jack to the Diagnostic Port on the top of the device. See Figure 2-13.

Connect the RS485 end of the converter to the 9-Pin RS485 end of the MultiFlo Cable Adapter.

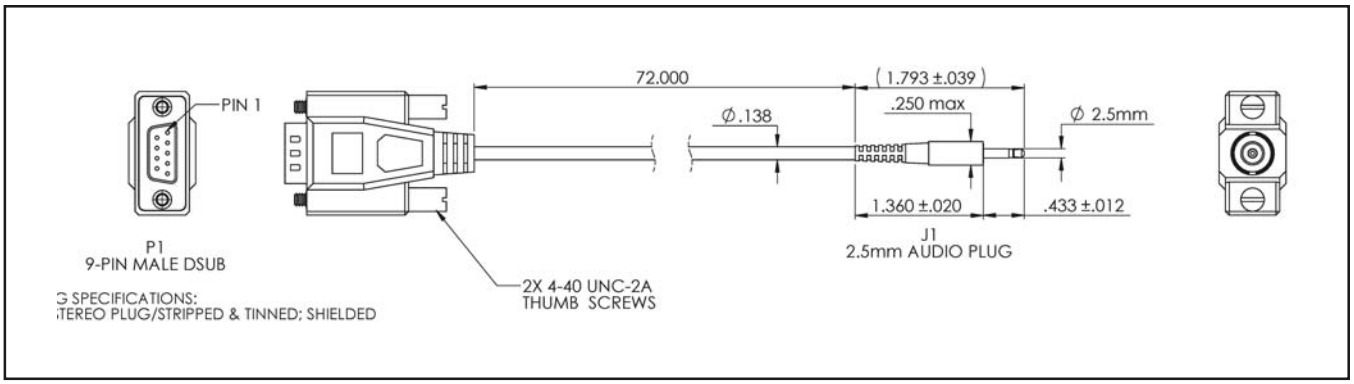

Figure 2-11 MultiFlo Cable Adapter

Figure 2-12 USB-RS485 Converter (214F027AAA)

Connect the USB end of the converter to a laptop or PC.

For GF100/GF101 devices with EtherCAT communication, the diagnostic port must be used to interface with the MultiFlo Configurator.

- Ensure the M8 power connector is attached and the device is powered on
- Only after the device is powered on, attach a micro-USB cable to the diagnostic port of the device and the USB end to a laptop or PC
- Once use of the diagnostic port is complete, remove the micro-USB cable before removing power from the device. See Figure 2-13 below

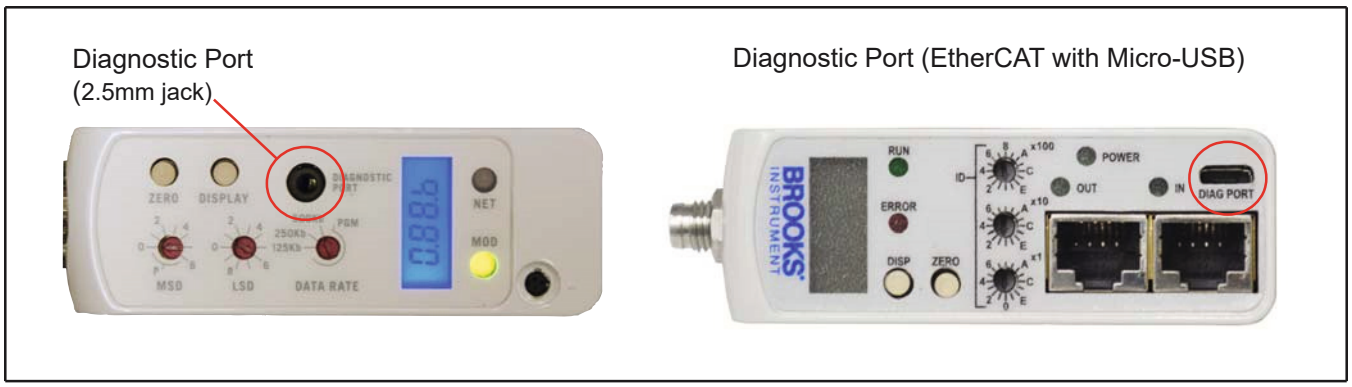

Figure 2-13 Diagnostic Port Locations

The latest MutliFlo Configurator Software and Databases and MultiFlo Configurator Quick Start Guide are available on the Brooks Instrument website at: www.BrooksInstrument.com/MultiFlo. Please reference the MultiFlo Configurator Quick Start Guide for installation and operation details. Download the MultiFlo Configurator software into your computer from the Brooks Instrument website www.BrooksInstrument.com/MultiFlo. Install the MultiFlo Configurator as described in the MultiFlo Configurator Quick Start Guide and use the guide as a reference for operation details.

⚠ CAUTION

DO NOT make any connections to unlabeled connector pins. Any failure to comply could damage the GF100/GF120xHT/GF101 Series and/or the mating electrical device. Before connecting the cable, make sure that all pin connections of the mating cable have the same pin out connections. When installing and removing cables to and from your computer, make sure the power is turned off on your computer. This will prevent damage to your computer and associated equipment.

Electrical Connections

DeviceNet Connections

DeviceNet is a 5 wire local network connection that employs a command response communication protocol for communicating between a master and slave. Obtain a DeviceNet communication cable (Micro M-12) and fasten it to the 5-pin connector as shown in Figure 2-14.

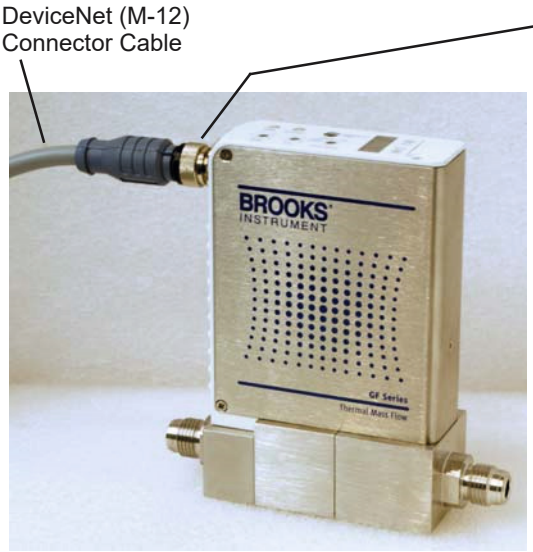

Pin	Connection
1	Drain
2	V+ (11-25 Vdc)
3	V--
4	CAN-H
5	CAN-L

⚠ CAUTION

DO NOT apply more than 10 Inch-Pounds of torque to the cable coupling when connecting the cable to the device or damage may result to the connector.

Figure 2-14 Example of GF100 Series with a DeviceNet Communication

Analog/RS485 Connections

The GF100/GF120xHT/GF101 Series devices are available with Analog 9-Pin D-Connectors shown in Figure 2-15.

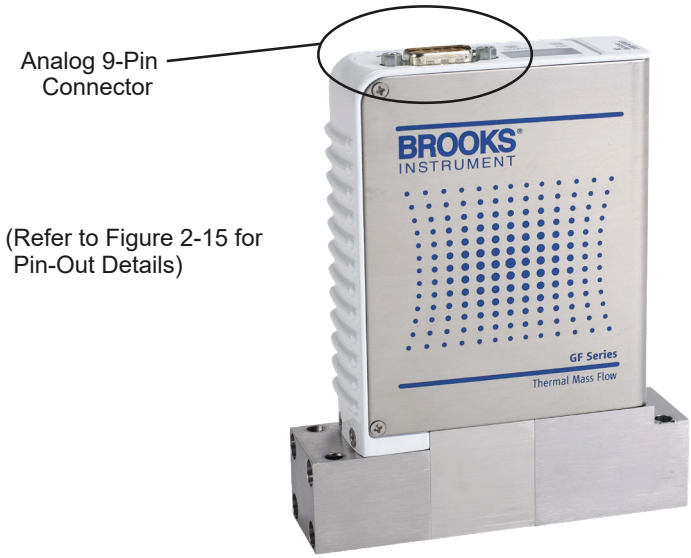

Figure 2-15 Example of GF100 Series with 9-Pin Analog Connector

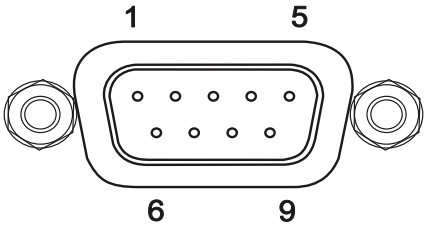

PIN	Connection	
1	Valve Control	
2	Output (0-5 Vdc)	
3	+15 Vdc	+24 Vdc
4	Pwr Com	NC
5	-15 Vdc	Pwr Com
6	Setpoint (0-5 Vdc)	
7	Signal Common	
8	RS485 DX+	
9	RS485 DX-	

Figure 2-16 Analog 9-Pin Connector, Alternate Pin-out Options Available

EtherCAT Connections

Power needs to be supplied via the standard male M8 5-pin connector. The M8 connector is located on the upper inlet side of the device. Refer to Figures 2-17 and 2-18 below.

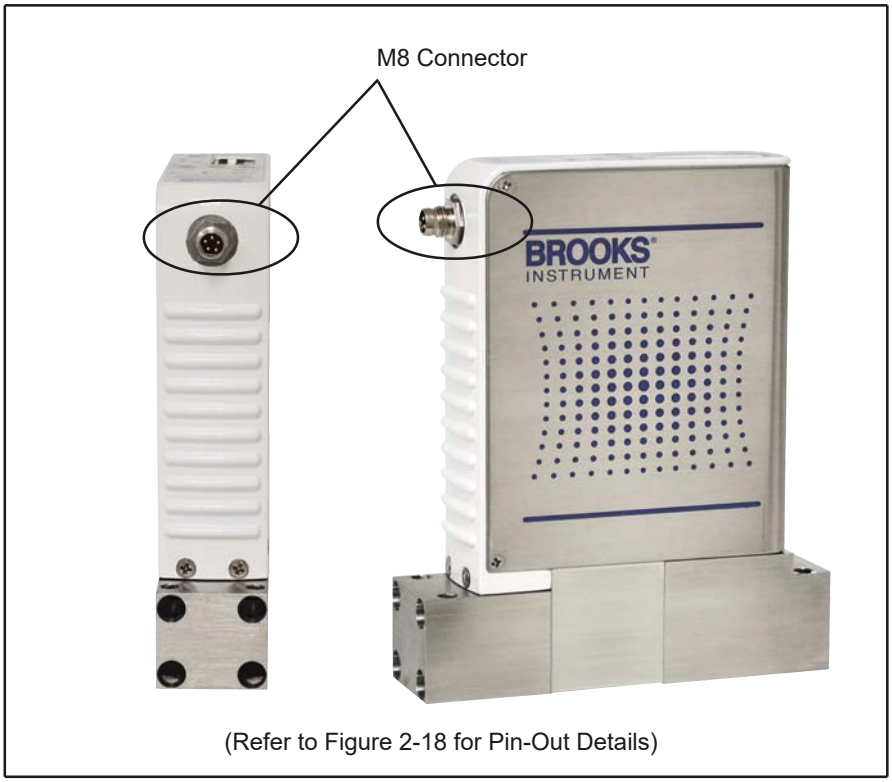

Figure 2-17 Example of GF100 Series with EtherCAT Communications, M8 Power Connector Location.

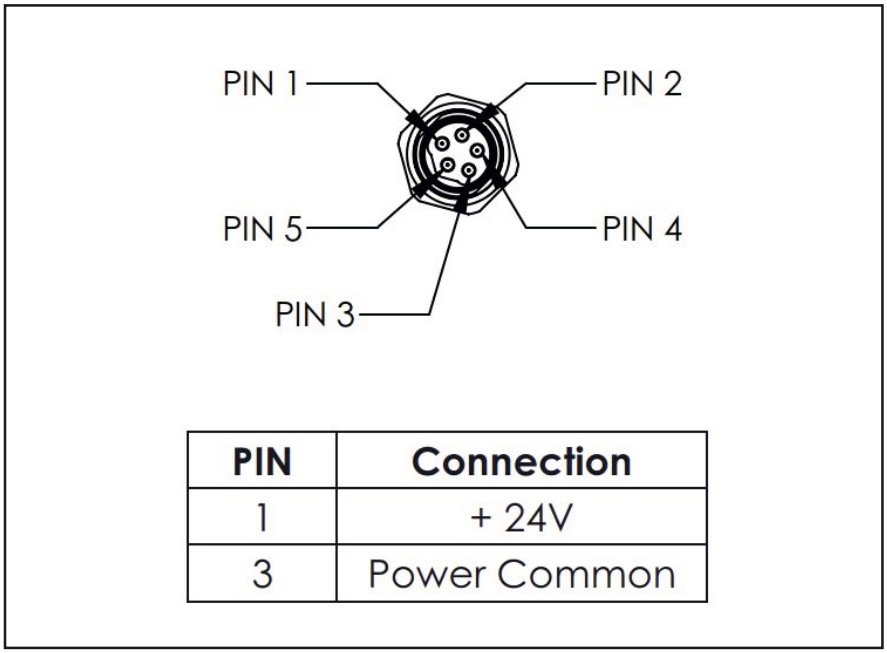

PIN	Connection
1	+ 24V
3	Power Common

Figure 2-18 M8 Power Connector Drawing

Base I/O Options

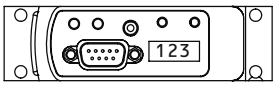

Description: Industry standard Analog / RS485 interface

Model Code Option: G1

Pin	Description	
1	Valve Control	
2	Output (0-5 Vdc)	
3	+15 Vdc	+24 Vdc
4	Pwr Com	NC
5	-15 Vdc	Pwr Com
6	Setpoint (0-5 Vdc)	
7	Signal Common	
8	RS-485 (DX+)	
9	RS-485 (DX-)	

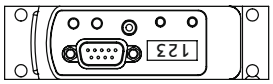

Description: OEM specific Analog / RS485 interface. Display and top plate re-oriented 180°

Model Code Option: GX

Pin	Description	
1	Valve Control	
2	Output (0-5 Vdc)	
3	+15 Vdc	+24 Vdc
4	Pwr Com	NC
5	-15 Vdc	Pwr Com
6	Setpoint (0-5 Vdc)	
7	Signal Common	
8	RS-485 (DX+)	
9	RS-485 (DX-)	

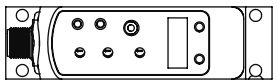

Description: Industry standard ODVA compliant DeviceNet interface

Model Code Option: DX

Pin	Description
1	Drain
2	V+ (11-25 Vdc)
3	V-
4	CAN-H
5	CAN-L

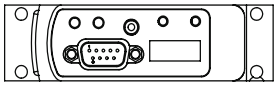

Description: Industry standard Analog only interface

Model Code Option: TX

Pin	Description	
1	Valve Control	
2	Output (0-5 Vdc)	
3	+15 Vdc	+24 Vdc
4	Pwr Com	NC
5	-15 Vdc	Pwr Com
6	Setpoint (0-5 Vdc)	
7	Signal Common	
8	No Connection	
9	No Connection	

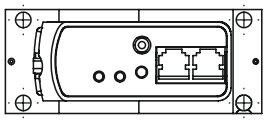

Description: Industry standard Analog 9-Pin Sub D connector and dual RJ11 RS485 ports

Model Code Option: SX

Pin	Description	
1	Valve Control	
2	Output (0-5 Vdc)	
3	+15 Vdc	+24 Vdc
4	Pwr Com	NC
5	-15 Vdc	Pwr Com
6	Setpoint (0-5 Vdc)	
7	Signal Common	
8	Signal Common	
9	Valve Test Point	
RJ11 Pin	**Description**	
3	RS-485 (DX-)	
4	RS-485 (DX+)	

Adapter Cables with Base I/O Option

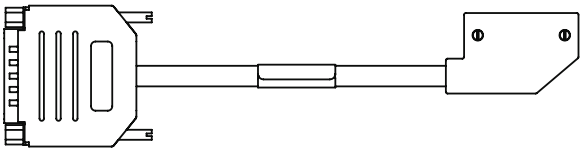

A range of low profile adapter cables have been developed to support replacing older generation MFC's with different pinout configurations. The base MFC will be either a G1, TX or SX configuration, depending on the product being replaced.

Model Code Option: UX

Pin	Description	
9	Valve Off	
6	Output (0-5 Vdc)	
4	+15 Vdc	+24 Vdc
7	Pwr Com	NC
11	-15 Vdc	Pwr Com
15	Setpoint (0-5 Vdc)	
1,13,14	Signal Common	
2	Zero Alarm	
12	Valve Test Point	
8	Case Ground	
3,5,10	No Connection	

Description: SX base I/O with 7003550 adapter for compatibility with Unit UDU15

Model Code Option: EX

Pin	Description	
J	Valve Off	
3	Output (0-5 Vdc)	
4	+15 Vdc	+24 Vdc
2	Pwr Com	NC
F	-15 Vdc	Pwr Com
A	Setpoint (0-5 Vdc)	
B,C,10	Signal Common	
1	Case Ground	
5,6,8,9	Not Connected	
I,D,E,H	Not Connected	
7,G	Key Way	
J2	J3	
3	3	RS-485 (DX-)
4	4	RS-485 (DX+)

Description: GX base I/O with 7003083 adapter for compatibility with Unit "E", IN "L", "R"

Model Code Option: FX/JX

Pin	Description	
1	Valve Control*	
2	Output (0-5 Vdc)	
3	+15 Vdc	+24 Vdc
4	Pwr Com	NC
5	-15 Vdc	Pwr Com
6	Setpoint (0-5 Vdc)	
7	Signal Common	
8	Signal Common	
9	Valve Test Point	

Description: SX base I/O with 7003069 (FX)/7001814 (JX) adapter for compatibility with Unit UDF9/UDJ9

Model Code Option: BX

Pin	Description	
12	Valve Override	
2	Output (0-5 Vdc)	
5	+15 Vdc	+24 Vdc
9	Pwr Com	NC
6	-15 Vdc	Pwr Com
8	Setpoint (0-5 Vdc)	
1,10	Signal Common	
3,4,7,11	No Connection	
13,14,15	No Connection	

Description: G1 base I/O with 7003590 adapter for compatibility with Brooks 15-Pin D

Model Code Option: KX

Pin	Description	
3	Valve Control	
2	Output (0-5 Vdc)	
7	+15 Vdc	+24 Vdc
5	Pwr Com	NC
6	-15 Vdc	Pwr Com
8	Setpoint (0-5 Vdc)	
11,12	Signal Common	
15	Case Ground	
1,4,9,10, 13,14	No Connection	

Description: G1 base I/O with 7003298 adapter for compatibility with Unit UDK15

Other adapter options are available for the GF Series. Please contact Brooks Customer Service for more information.

Figure 2-19 GF100 Series Electrical Interface Options

Base I/O Options

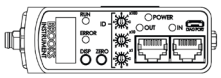

Description: Industry Standard EtherCAT interface

Model Code Option: E0

Pin	Description
1	+24V
3	Power Common

EtherCAT diagnostic port communication via micro-USB

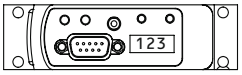

Description: Industry standard Analog/ RS485 interface

Model Code Option: G1

Pin	Description	
1	Valve Control	
2	Output (0-5 Vdc)	
3	+15 Vdc	+24 Vdc
4	Pwr Com	NC
5	-15 Vdc	Pwr Com
6	Setpoint (0-5 Vdc)	
7	Signal Common	
8	RS-485 (DX+)	
9	RS-485 (DX-)	

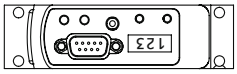

Description: OEM specific Analog/ RS485 interface. Display and top plate re-oriented 180°

Model Code Option: GX

Pin	Description	
1	Valve Control	
2	Output (0-5 Vdc)	
3	+15 Vdc	+24 Vdc
4	Pwr Com	NC
5	-15 Vdc	Pwr Com
6	Setpoint (0-5 Vdc)	
7	Signal Common	
8	RS-485 (DX+)	
9	RS-485 (DX-)	

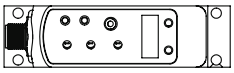

Description: Industry standard ODVA compliant DeviceNet interface

Model Code Option: DX

Pin	Description
1	Drain
2	V+ (11-25 Vdc)
3	V-
4	CAN-H
5	CAN-L

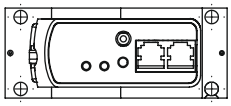

Description: Industry standard Analog 9-Pin Sub D connector and dual RJ11 RS485 ports

Model Code Option: SX

Pin	Description	
1	Valve Control	
2	Output (0-5 Vdc)	
3	+15 Vdc	+24 Vdc
4	Pwr Com	NC
5	-15 Vdc	Pwr Com
6	Setpoint (0-5 Vdc)	
7	Signal Common	
8	Signal Common	
9	Valve Test Point	
RJ11 Pin	**Description**	
3	RS-485 (DX-)	
4	RS-485 (DX+)	

Above Base I/O options include:
Diagnostic port communication RS485 via 2.5mm jack

Adapter Cables with Base I/O Option

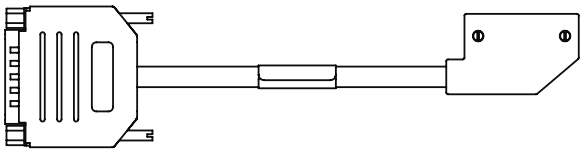

A range of low profile adapter cables have been developed to support replacing older generation MFC's with different pinout configurations. The base MFC will be either a G1, GX or SX configuration.

Model Code Option: UX

Pin	Description	
9	Valve Off	
6	Output (0-5 Vdc)	
4	+15 Vdc	+24 Vdc
7	Pwr Com	NC
11	-15 Vdc	Pwr Com
15	Setpoint (0-5 Vdc)	
1,13,14	Signal Common	
2	Zero Alarm	
12	Valve Test Point	
8	Case Ground	
3,5,10	No Connection	

Description: SX base I/O with 7003550 adapter

Model Code Option: BX

Pin	Description	
12	Valve Override	
2	Output (0-5 Vdc)	
5	+15 Vdc	+24 Vdc
9	Pwr Com	NC
6	-15 Vdc	Pwr Com
8	Setpoint (0-5 Vdc)	
1,10	Signal Common	
3,4,7,11	No Connection	
13,14,15	No Connection	

Description: G1 base I/O with 7003590 adapter

Model Code Option: FX/JX

Pin	Description	
1	Valve Control	
2	Output (0-5 Vdc)	
3	+15 Vdc	+24 Vdc
4	Pwr Com	NC
5	-15 Vdc	Pwr Com
6	Setpoint (0-5 Vdc)	
7	Signal Common	
8	Signal Common	
9	Valve Test Point	

Description: SX base I/O with 7003069 (FX)/7001814 (JX) adapter

Model Code Option: KX

Pin	Description	
3	Valve Control	
2	Output (0-5 Vdc)	
7	+15 Vdc	+24 Vdc
5	Pwr Com	NC
6	-15 Vdc	Pwr Com
8	Setpoint (0-5 Vdc)	
11,12	Signal Common	
15	Case Ground	
1,4,9,10, 13,14	No Connection	

Description: G1 base I/O with 7003298 adapter

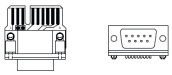

Model Code Option: QX/HX/IX

Pin	Description	
J	Valve Off	
3	Output (0-5 Vdc)	
4	+15 Vdc	+24 Vdc
2	Pwr Com	NC
F	-15 Vdc	Pwr Com
A	Setpoint (0-5 Vdc)	
B,C,10	Signal Common	
1	Case Ground	
5,6,8,9	Not Connected	
I,D,E,H	Not Connected	
7,G	Key Way	

Description: SX, G1, or GX base respectively I/O with 097B393ZZZ adapter for compatibility

Note: Pin No 10 can be disconnected from Signal Common by removing jumper P1 on the 097B393ZZZ adapter.

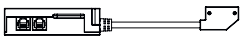

Model Code Option: EX

Pin		Description
J		Valve Off
3		Output (0-5 Vdc)
4		+15 Vdc / +24 Vdc
2		Pwr Com / NC
F		-15 Vdc / Pwr Com
A		Setpoint (0-5 Vdc)
B,C,10		Signal Common
1		Case Ground
5,6,8,9		Not Connected
I,D,E,H		Not Connected
7,G		Key Way
J2	J3	
3	3	RS-485 (DX-)
4	4	RS-485 (DX+)

Description: GX base I/O with 7003083 adapter

Other adapter options are available for the GF Series. Please contact Brooks Customer Service for more information.

Figure 2-20 GF120xHT Series Electrical Interface Options

General

After the device has been properly installed in the process, it is ready for operation. When initiating flow, slowly open any upstream shutoff valve to avoid a flow surge. A bypass is helpful in bringing the flow on smoothly. Avoid starting a pump to supply the device without the use of a valve upstream of the device.

⚠ CAUTION

Any sudden change in system pressure may cause mechanical damage to elastomer materials. Damage can occur when there is a rapid expansion of fluid that has permeated elastomer materials. The user must take the necessary precautions to avoid such conditions.

⚠ WARNING

Before operating the flow controller, ensure all gas connections have been properly tightened, and where applicable, all electrical connections have been properly terminated.

Theory of Operation for Flow Measurement

The thermal mass flow measurement system consists of two components: the restrictor or bypass and the flow sensor. Figure 3-1 is diagram of the flow stream through the device, with an enlarged view of the flow sensor. Gas flow entering the device is separated into two paths; one straight through the restrictor and the other through the flow sensor. This is represented in Figure 3-1, where the total flow A+B enters the device and is separated into streams A and B. The streams are joined again at the far side of the restrictor.

The separation of the flow streams is caused by the restrictor. During flow conditions, there will be a pressure differential across the restrictor that forces gas to flow in the sensor.

The pressure difference caused by the restrictor varies linearly with total flow rate. The sensor has the same linear pressure difference versus flow relationship. The ratio of sensor flow to the flow through the restrictor remains constant over the range of the device (A/B = constant). The full scale flow rate of the device is established by selecting a restrictor with the correct pressure differential for the desired flow.

The flow sensor is a very narrow, thin-walled Hastelloy tube. Onto this tube are built upstream and downstream temperature sensing and heating elements. During no-flow conditions, the amount of heat reaching each temperature sensor is equal, so temperatures T1 and T2 (Figure 3-1) are equal. Gas flowing through the tube carries heat away from the upstream temperature sensor and toward the downstream sensor. The temperature difference, T2 – T1, is directly proportional to the gas mass flow. GF100/GF120xHT/GF101 Series operating principles are described in Figure 3-1.

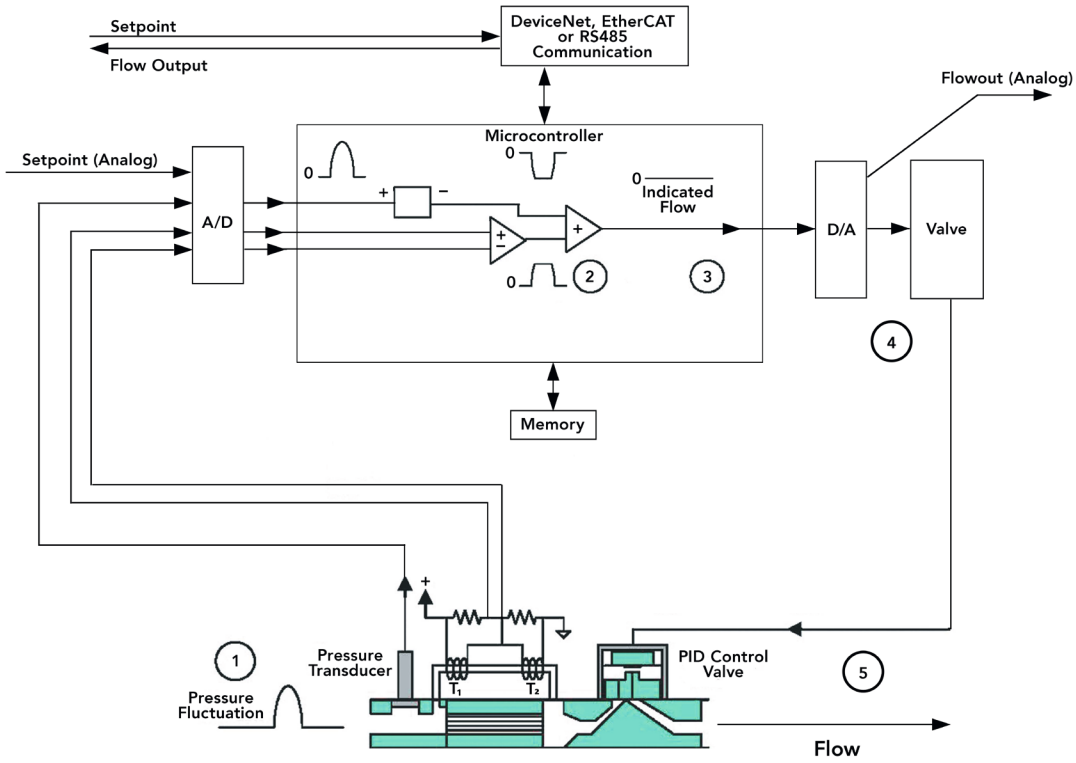

Operating principles are listed below by following #1-5.

1.The GF125 uses a pressure transducer and support circuitry that sums the transducer signal in the sensor path (transducer not included in the GF100 and the GF120). Incoming pressure fluctuation results in a signal that is proportional to fluctuation.
2. The signal from the pressure transducer is inverted and then summed in with the original sensor signal.
3. The two summed signals cancel each other out.
4. The resulting sensor signal is used to control the valve.
5. The flow of process gas is undisturbed by incoming pressure fluctuations.

Figure 3-1 GF100 Series Operating Principles

Overview

No routine maintenance is required on the Brooks GF100/GF120xHT/GF101 Series devices. If an in-line filter is used, the filtering elements should be periodically replaced or cleaned. Any precision unit such as a flow controller requires occasional servicing, especially if it has been operating for an extended period of time. If reactive gases are being used, it is recommended that you send the device to a Brooks Service Center for cleaning and recalibration. Please follow the instructions for removal, product packaging and product return instructions found in Section 2 Installation—Return Shipment. All active process instrumentation and equipment is subject to aging and wear from their environment. This includes temperature, mechanical stress, component tolerance shift, contaminant buildup, oxidation, and other influences. The effects are gradual, but over time the changes can affect the accuracy of even the best equipment. Therefore, it is recommended to re-zero the device at 6 month intervals. Refer to Section 2 “Performance Checks” for re-zeroing instructions.

Maintenance

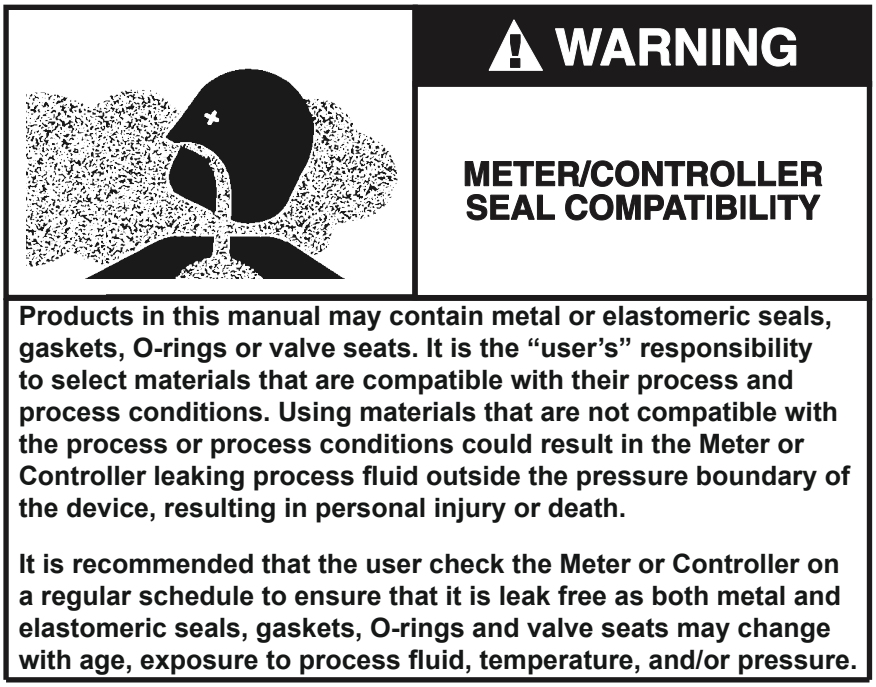

⚠ WARNING

If it becomes necessary to remove the controller from the system after exposure to toxic, pyrophoric, flammable or corrosive gas, purge the controller thoroughly with a dry inert gas such as Nitrogen before disconnecting the gas connections. Failure to correctly purge the controller could result in fire, explosion or death. Corrosion or contamination of the mass flow controller, upon exposure to air, may also occur.

⚠ WARNING

If it becomes necessary to remove the instrument from the system, power to the device must be disconnected.

⚠ CAUTION

It is important that this MFC/MFM only be serviced by properly trained and qualified personnel.

⚠ CAUTION

This instrument contains electronic components that are susceptible to damage by static electricity. Proper handling procedures must be observed during the removal, installation or other handling of internal circuit boards or devices.

Troubleshooting

This section includes a Troubleshooting Checklist and a GF100/GF120xHT/GF101 Series Troubleshooting Guide that identifies symptoms, possible causes, and corrective actions.

⚠ NOTICE

OEM tool problems are often caused by something other than the GF100/GF120xHT/GF101 Series. Therefore, Brooks recommends that you review both the Troubleshooting Checklist and the GF100/GF120xHT/GF101 Series Troubleshooting Guide before removing the GF100/GF120xHT/GF101 Series from your system. It is also suggested to contact your Brooks Service representative before removing the GF100/GF120xHT/GF101 Series from your system.

Troubleshooting Checklist

1. Check environmental factors that could affect changes to GF100/GF120xHT/GF101 Series performance. The most common environmental factors are listed in Table 4-1.

Table 4-1 Environmental Factors

GF100/GF120xHT/GF101 Series Performance	Possible Causes
Inaccurate flow.	Temperature shift (steady state or transient). Inlet pressure shift (steady state or transient). Power supply problem. Electrical interference Dirty gas chamber Changes in gas.
Control problems. Cannot reach setpoint. Oscillation.	Differential pressure not within operating range Inlet pressure not stable
Zeroing problems, Indicated zero is not stable.	Temperature shift (steady state or transient). Inlet pressure shift (steady state or transient). Power supply problem. Electrical interference

2. Check supply voltage and check for a consistent ground.
3. Insure OEM tool setpoint matches the setpoint at the GF100/GF120xHT/GF101 Series. Observe for consistency.
4. Verify isolations valves are open and the gas supply is turned on. Then verify operating pressures are within operating ranges.
5. Check GF100/GF120xHT/GF101 Series voltage response by moving the setpoint back and forth. Observe for voltage changes.

GF100/GF120xHT/GF101 Series Troubleshooting Guide

Table 4-2 GF100/GF120xHT/GF101 Series Troubleshooting Guide

Symptoms & Possible Causes	Corrective Action
1. No gas flow.	
Is the gas supply turned on?	Check shut-off valve and pressure readout. Open the gas supply.
Is the regulator turned on at the correct operating pressure?	Turn off the regulator and reset it to the recommended pressure as described in the Data Sheet.
Are any upstream or downstream shut-off valves closed, either by the system or because of failure?	Verify that the valves are open and operating properly.
Is the MOD LED light on the GF100/GF120xHT/ GF101 Series lit solid green?	Observe the LED display panel on top to verify. If the LED light is not lit, cycle power to reboot.
Is the commanded setpoint from tool/system at 0.00 Vdc?	Use the tool software to verify.
Has the been commanded off by an active “valve closed” input?	Use the tool software to verify.
For GF120xHT Series: is the cable connected between the remote electronics and the flow module?	Check cable connections, if not connected, connect the cable. If the cable is connected, check integrity of connection and try reconnecting.
2. Flow out of range.	
Is the gas inlet/outlet pressure differential either too high or too low? NOTE: If the differential pressure is too high, voltage to the will be zero, which is abnormally low for the setpoint. If the differential is too low, voltage to will be at its maximum value, which is abnormally high for the set-point. If operating a GF120xHT: is the gas temperature higher or lower than the calibrated temperature on the label? If unsure, please check the label. Device will preform optimally at calibrated process conditions.	Verify that the pressure is correct for the gas and range. If required, adjust inlet/outlet pressure to achieve proper pressure reading.
Is the MOD LED light on the GF100/GF120xHT/ GF101 Series lit solid green?	Observe the LED display panel on the top. If the LED light is not lit, cycle power to reboot.
Is the setpoint correct for the required gas flow?	Use the tool software to verify.
Is the device calibrated for the particular gas?	Check the side label. Run a flow check to verify.
Is the zero correct?	Zero the according to zeroing procedure in Section 2-14. Verify leak check rates are OK.
3. No gas control; flow is at or above maximum.	
Is the gas pressure too high?	Verify that the pressure is correct for the gas and range. If required, adjust inlet/outlet pressure to achieve proper pressure reading.
Are system valves open, or is the purge input activated?	Use tool software to verify.
Is the setpoint correct for the required flow?	Use tool software to verify.

Table 4-2 GF100/GF120xHT/GF101 Series Troubleshooting Guide (Continued)

Symptoms & Possible Causes	Corrective Action
4. No gas flow above some set point.	
NOTE: When the setpoint is increased beyond this point, the GF100/GF120xHT/GF101 Series signal remains at some value lower than the set-point. Is the gas inlet/outlet differential pressure sufficient? NOTE: If the pressure reading is too low, the valve voltage to the GF100/GF120xHT/GF101 Series will be at its maximum output. This condition will cause internal GF valve heating and inability to properly reach desired flow setpoints.	Verify that the pressure is correct for the gas and range. If required, adjust regulator to achieve proper pressure
Is the GF100/GF120xHT/GF101 Series calibrated for the gas flow?	Check GF100/GF120xHT/GF101 Series side label. Run a flow check to verify. If flow is incorrect, replace the GF100/GF120xHT/GF101 Series with a unit that is calibrated properly.
5. No gas flow below some set-point.	
NOTE: When the setpoint is decreased below this point, the GF100/GF120xHT/GF101 Series signal remains at some value higher than the setpoint. Is the gas inlet/outlet differential pressure too high, or above published setpoints? NOTE: If the differential pressure reading is too high, voltage to the GF100/GF120xHT/GF101 Series will be at its maximum value when the setpoint is decreased below the point where flow decreases.	Verify that the pressure is correct for this gas and range. If required, adjust regulator to achieve proper pressure
Is the GF100/GF120xHT/GF101 Series leaking?	Check for contamination. Test the GF100/GF120xHT/GF101 Series for leak integrity. Replace the Unit GF100/GF120xHT/GF101 Series if leak-age is detected. NOTE: If using a GF120xHT Series: please check that the device is calibrated at pressure and temperature of operation. If process conditions do not match label conditions, please replace with unit that is calibrated for desired operation.
6. Gas flow, or GF100/GF120xHT/GF101 Series pressure reading oscillates.	
Is the GF100/GF120xHT/GF101 Series calibrated for the gas flowing?	Check the GF100/GF120xHT/GF101 Series side can label. Run a flow check to verify. If flow is incorrect, replace the GF100/GF120xHT/GF101 Series.
Is there too much gas pressure across the GF100/GF120xHT/GF101 Series?	Verify that the pressure is correct for this gas and range. If required, adjust the regulator to achieve proper pressure reading.

Table 4-2 GF100/GF120xHT/GF101 Series Troubleshooting Guide (Continued)

Symptoms & Possible Causes	Corrective Action
6.Gas low, or GF100/GF120xHT/GF101 Series pressure reading oscillates.	
Are inlet and outlet pressures stable? NOTE: Most GF100/GF120xHT/GF101 Series calibrated with nitrogen will oscillate with hydrogen or helium.	If outlet pressure is unstable, check for (no oscillation or hunting) a faulty vacuum pump, or hunting at a downstream valve. Check inlet pressure on tool. A faulty pressure regulator can make the GF100/GF120xHT/GF101 Series appear to oscillate. Adjust inlet pressure up or down by 2 psig increments until hunting disappears. Verify common gas pressure is within range. NOTE: Hunting or oscillation can be contributed to multiple GF100/GF120xHT/GF101 Series sharing a common gas manifold. Therefore, inspect gas delivery sources to the gas box. (for example; two tools sharing a common gas bottle and calling for gas at the same time.) Valve leak. Unregulated gas pressure from Facilities.
7. GF100/GF101 Series does not read zero pressure when gas is shut off.	
Is the differential pressure across the GF100/GF120xHT/GF101 Series really zero? Is the GF100/GF120xHT/GF101 Series configured properly in the tool software? Is the GF100/GF120xHT/GF101 Series mounted to the proper attitude?	Verify that the pressure is correct for the gas and range. If the GF100/GF120xHT/GF101 Series has been contaminated, it may not be able to close, and therefore, will not zero. Equalize the pressure across the GF100/GF120xHT/GF101 Series by opening it briefly. Set up the GF100/GF120xHT/GF101 Series for zeroing. Then perform the zeroing procedure in Section 2-14. Use the tool software to verify. Refer to the side can label on the GF100/GF120xHT/GF101 Series. The GF100/GF120xHT/GF101 Series should be calibrated in the attitude it will be operating at.
8. OEM tool does not read correct GF100/GF120xHT/GF101 Series zero reading.	
Is the differential pressure across the GF100/GF120xHT/GF101 Series really zero? Is the supply voltage within specified range? Is the GF100/GF120xHT/GF101 Series mounted in the proper attitude?Is the flow output signal of the GF100/GF120xHT/GF101 Series really zero?	GF100/GF120xHT/GF101 Series valve leakage. Incorrect MFC zero.
9. Zero Drift.	
Improper zero of the GF100/GF120xHT/GF101 Series? Excessive Valve leakage?	GF100/GF120xHT/GF101 Series aging or sensor stabilization. Zero is not correct.

Table 4-2 GF100/GF120xHT/GF101 Series Troubleshooting Guide (Continued)

Symptoms & Possible Causes	Corrective Action
10. Calibration Drift.	
Gas box temperature too high? Is it linear offset? NOTE: If using the GF120xHT Series: Are process conditions matched to calibration conditions? If not, please replace with a device which is calibrated to desired process conditions.	Zero is not correct.
11. GF100/GF120xHT/GF101 Series indicates Overshoot.	
	If the tool is idle for an extended period of time, high inlet pressure or contamination will cause overshoot on first use. NOTE: Is the inlet pressure on the GF120xHT matched to process conditions? If not, please replace with a device matched to process conditions.
12.OEM tool indicates the wrong full scale value for GF100/GF101 Series.	
	Older version of Multiflo Configurator used to program GF100/GF101 Series.
13. GF100/GF120xHT/GF101 Series dumps large volume of gas into chamber when setpoint is commanded from the tool.	
	The tool is commanding a setpoint before the pneumatic valves are opened. GF100/GF120xHT/GF101 Series and pneumatic timing may be offset. GF100/GF120xHT/GF101 Series overshoots.
14. Tool display output doesn't match GF100/GF120xHT/GF101 Series flow output.	
Cable resistance causing offset in the tool's display.	Check GF100/GF120xHT/GF101 Series zero.

Overview

Reference Tables 5-1 through 5-5 for specific Product Description Codes.

Table 5-1 GF100, GF120 & GF125 Series Product Description Code with Analog and DNET Communications

Code Description	Code Option	Option Description
I. Base Model Code	GF	High Purity/Ultra High Purity Digital Mass Flow Controllers
II. Package / Finish Specifications	X	Flow range 3 sccm - 55 slpm N_2 Eq.; 1 sec Response; 10 Ra
	120	Flow range 3 sccm - 55 slpm N_2 Eq.; 700 msec Response; 5 Ra
	125	Pressure Transient Insensitive (PTI) Flow range 3 sccm - 55 slpm N_2 Eq.; ± 1.0% S.P. Accuracy; 300-700 msec Response; 5 Ra
III. Configurability	C	MultiFlo capable. Standard bins or specific gas/range may be selected.
	X	Not MultiFlo capable. Specific gas/range required (must select w/ SD, SL or HA special application).
IV. Special Application	XX	Standard
	SL	Safe Delivery System (GF120 Only) Full scale flow range; 4 to 25 sccm, Nitrogen Equivalent
	SD	Safe Delivery System (GF120 Only) Full scale flow range; >25 sccm to 1 slpm, Nitrogen Equivalent
V. Valve Configuration	O	Normally Open valve (not available with SD, SL or HA options)
	C	Normally Closed valve (must select with SD, SL or HA special application)
	M	Meter (No Valve)
VI. Gas or SH MultiFlo Bin	XXXX XXXX	Specific Gas Code & Range, i.e. "0004" = Argon and "100L" = 100 slpm (must select with SD, SL or HA special application)
	SH40 010C	Standard Configuration #40, 3-10 sccm Nitrogen Equivalent (0° C Reference)
	SH41 030C	Standard Configuration #41, 11-30 sccm Nitrogen Equivalent (0° C Reference)
	SH42 092C	Standard Configuration #42, 31-92 sccm Nitrogen Equivalent (0° C Reference)
	SH43 280C	Standard Configuration #43, 93-280 sccm Nitrogen Equivalent (0° C Reference)
	SH44 860C	Standard Configuration #44, 281-860 sccm Nitrogen Equivalent (0° C Reference)
	SH45 2.6L	Standard Configuration #45, 861-2600 sccm Nitrogen Equivalent (0° C Reference)
	SH46 7.2L	Standard Configuration #46, 2601-7200 sccm Nitrogen Equivalent (0° C Reference)
	SH47 015L	Standard Configuration #47, 7201-15000 sccm Nitrogen Equivalent (0° C Reference)
	SH48 030L	Standard Configuration #48, 15001-30000 sccm Nitrogen Equivalent (0° C Reference)
	SH49 040L	Standard Configuration #49, 30001-40000 sccm Nitrogen Equivalent (0° C Reference)
	SH50 055L	Standard Configuration #50, 40001-55000 sccm Nitrogen Equivalent (0° C Reference)
VII. Fitting	VX	1-1/2" body width, 124mm 1/4" VCR male
	VS	1-1/8" body width, 124mm 1/4" VCR male
	CX	1-1/8" body width, 92mm C Seal
	DX	1-1/8" body width, 79.8mm C Seal
	EX	1-1/2" body width, 79.8mm W Seal
	WX	1-1/8" body width, 92mm W Seal
	YX	1-1/8" body width, 79.8mm W Seal
	AX	1-1/2" body width, 92mm C Seal
	BX	1-1/2" body width, 92mm W Seal
	LX	1-1/8" body width, 92mm C Seal w/Poke Yoke
	AS	1-1/2" body width, 92mm 0.440" large bore C Seal (only for bins SH45-SH50)
VIII. Downstream	A	Atmosphere
	V	Vacuum; Default for SD, SL and HA special application
IX. Sensor	O	Default Sensor Orientation

Table 5-1 GF100, GF120 & GF125 Series Product Description Code with Analog and DNET Communications (Continued)

Code Description	Code Option	Option Description
X. Communications/Connector	BX	Cable adapter to 15 pin D Brooks (Unit "B","N"); adapts G1 base
	EX	Cable adapter to card edge (w/out VTP), RS485 through RJ11 jacks (Unit "E"; IN "L", "R"); adapts GX base (Not Available on 79.8mm fitting DX, YX, EX)
	FX	Cable adapter with 9 pin STEC pin-out & jack screws (w/VTP) (Unit "F","O"); adapts SX base
	GX	9-Pin D with RS485 (Unit"G") (Not Available on 79.8mm fitting DX, YX, EX)
	G1	9-Pin D with RS485 (Unit"G")
	JX	Cable adapter with 9 pin STEC pin-out & jack screws (w/VTP) (Unit "J","W"); adapts SX base
	KX	Cable adapter to MKS 15-Pin D (Unit "K"); adapts G1 base
	SX	9 pin D with STEC pin-out (w/VTP) (Unit "S","Q")
	TX	9 pin D with UDT9 pin-out (UDT9) (Not Available on 79.8mm fitting DX, YX, EX)
	UX	Cable adapter to 15 pin D (w/VTP) (Unit & TN "U"); adapts SX base

DeviceNet Standard Configuration Parameters

Code Option	I/O	Connector	Power On State	Full Scale Setting	Full Scale Setting	Full Scale Setting	Poll I/O Instance Producer	Poll I/O Instance Consumer	Poll I/O State Transition	External Baud Rate
D0	DeviceNet	5 Pin Micro	Idle	Count	Integer	6000h	2	7	Executing	500KB
D1	DeviceNet	5 Pin Micro	Idle	Count	Integer	6000h	21	7	Executing	500KB
D2	DeviceNet	5 Pin Micro	Idle	SCCM	Float	7FFFh	13	19	Executing	500KB
D3	DeviceNet	5 Pin Micro	Idle	Count	Integer	6000h	22	7	Executing	500KB
D4	DeviceNet	5 Pin Micro	Executing	Count	Integer	6000h	22	8	Executing	500KB
D5	DeviceNet	5 Pin Micro	Idle	Count	Integer	6000h	6	8	Executing	500KB
D6	DeviceNet	5 Pin Micro	Idle	Count	Integer	7FFFh	3	7	Executing	500KB
D7	DeviceNet	5 Pin Micro	Idle	Count	Integer	7FFFh	6	8	Executing	500KB
D8	DeviceNet	5 Pin Micro	Idle	Count	Integer	6000h	3	7	Executing	500KB
D9	DeviceNet	5 Pin Micro	Executing	Count	Integer	6000h	2	7	Executing	500KB
DA	DeviceNet	5 Pin Micro	Idle	Count	Integer	7FFFh	22	7	Executing	500KB
DB	DeviceNet	5 Pin Micro	Idle	Count	Integer	6000h	22	8	Executing	500KB
DC	DeviceNet	5 Pin Micro	Idle	Count	Integer	7FFFh	3	7	Idle	500KB
DD	DeviceNet	5 Pin Micro	Executing	Count	Integer	7FFFh	22	8	Executing	500KB
DE	DeviceNet	5 Pin Micro	Executing	SCCM	Float	6000h	15	19	Executing	500KB
DX	DeviceNet	5 Pin Micro	To be defined by Customer Special Request							

XI. Customer Special Request	XXXX	Customer Special Request Number; required with "DX" Conn. Option to define DNet settings
XII. Auto Shut-Off	A	Auto Shut-Off (Included) Default for SD and SL special application
	X	Auto Shut-Off (Not Included) (Must be selected for meter)
XIII. Auto Zero	X	Auto Zero (Not Included)
XIV. Reference Temperature	000	0°C Reference Calibration (Standard) - Default Setting

Standard Sample Model Code

I	II	III	IV	V		VI		VII	VIII	IX	X		XI	XII	XIII		XIV
GF	100	C	XX	M	-	SH40010C	-	VX	A	O	GX	-	XXXX	A	X	-	000

Sample Safe Delivery System (SDS) Model Code

I	II	III	IV	V		VI		VII	VIII	IX	X		XI	XII	XIII		XIV
GF	120	X	SD	C	-	XXXXXXXX	-	EX	V	O	SX	-	XXXX	A	X	-	000

Table 5-2 GF100, GF120 & GF125 Series Communications Product Description Code with EtherCAT Communications

Code Description	Code Option	Option Description
I. Base Model Code	GF	High Purity/Ultra High Purity Digital Mass Flow Controllers
II. Package / Finish Specifications	100	Flow range 3 sccm - 55 slpm N_2 Eq.; 1 sec Response; 10 Ra
	120	Flow range 3 sccm - 55 slpm N_2 Eq.; 700 msec Response; 5 Ra
	125	Pressure Transient Insensitive (PTI) Flow range 3 sccm - 55 slpm N_2 Eq.; 300-700 msec Response; 5 Ra
III. Configurability	C	MultiFlo capable. Standard bins or specific gas/range may be selected.
	X	Not MultiFlo capable. Specific gas/range required (must select w/ SD, SL or HA special application).
IV. Special Application	XX	Standard
	SL	Safe Delivery System (GF120 Only) Full scale flow range; 4 to 25 sccm, Nitrogen Equivalent
	SD	Safe Delivery System (GF120 Only) Full scale flow range; 25 sccm to 1 slpm, Nitrogen Equivalent
V. Valve Configuration	O	Normally Open valve (not available with SD, SL or HA options)
	C	Normally Closed valve
	M	Meter (No Valve)
VI. Gas or SH MultiFlo Bin	XXXX XXXX	Specific Gas Code & Range, i.e. “0004” = Argon and “010L” = 10 slpm
	SH40 010C	Standard Configuration #40, 3-10 sccm Nitrogen Equivalent
	SH41 030C	Standard Configuration #41, 11-30 sccm Nitrogen Equivalent
	SH42 092C	Standard Configuration #42, 31-92 sccm Nitrogen Equivalent
	SH43 280C	Standard Configuration #43, 93-280 sccm Nitrogen Equivalent
	SH44 860C	Standard Configuration #44, 281-860 sccm Nitrogen Equivalent
	SH45 2.6L	Standard Configuration #45, 861-2600 sccm Nitrogen Equivalent
	SH46 7.2L	Standard Configuration #46, 2601-7200 sccm Nitrogen Equivalent
	SH47 015L	Standard Configuration #47, 7201-15000 sccm Nitrogen Equivalent
	SH48 030L	Standard Configuration #48, 15001-30000 sccm Nitrogen Equivalent
	SH49 040L	Standard Configuration #49, 30001-40000 sccm Nitrogen Equivalent
	SH50 055L	Standard Configuration #50, 40001-55000 sccm Nitrogen Equivalent
VII. Fitting	VS	1-1/8” body width, 124mm 1/4” VCR male
	VX	1-1/2” body width, 124mm 1/4” VCR male
	CX	1-1/8” body width, 92mm C Seal
	WX	1-1/8” body width, 92mm W Seal
VIII. Downstream Condition	A	Atmosphere
	V	Vacuum; Default for SD, SL and HA special application
IX. Sensor	O	Default Sensor Orientation
X. Connector	E0	EtherCAT Communication
XI. Customer Special Request	XXXX	Customer Special Request Number
XII. Auto Shut-Off	A	Auto Shut-Off (Included)
	X	Auto Shut-Off (Not Included)
XIII. Auto Zero	X	Auto Zero (Not Included)
XIV. Reference Temperature	000	0°C Reference Calibration (Standard) - Default Setting

Table 5-3 GF101, GF121 & GF126 Code with Analog and DNET Communications

Code Description	Code Option	Option Description
I. Base Model Code	GF	High Purity/Ultra High Purity Digital Mass Flow Controllers
II. Package / Finish Specifications	101	Flow range 55 - 300 slm N_2 Eq.; 10 Ra HP wetted flow path
	121	Flow range 55 - 300 slm N_2 Eq.; 5 Ra UHP wetted flow path
	126	Flow range 55 - 300 slm N_2 Eq.; 5 Ra UHP wetted flow path & integrated pressure measurement
III. Configurability	C	MultiFlo capable
	X	Not configurable
IV. Special Application	XX	Standard
V. Valve Configuration	C	Normally Closed valve
	M	Meter (No Valve)
VI. Gas or SH MultiFlo Bin	XXXX XXXX	Specific Gas Code & Range, i.e. "0004" = Argon and "100L" = 100 slpm
	SH51 055L	Standard Configuration #51, 55,001 sccm N_2 Equivalent (0°C Reference) Special Bin for low density gases, e.g. 73,002-120,000 He, 100,002-170,000 H_2
	SH52 100L	Standard Configuration #52, 55,002-100,000 sccm N_2 Equivalent (0°C Reference)
	SH53 200L	Standard Configuration #53, 100,001-200,000 sccm N_2 Equivalent (0°C Reference)
	SH54 300L	Standard Configuration #54, 200,001-300,000 N_2 Equivalent (0°C Reference)
VII. Fitting	V1	1-1/2" body width, 134mm 1/2" VCR male
	V2	1-1/2" body width, 150.4mm 1/2" VCR male
	V3	1-1/2" body width, 166mm 1/2" VCR male
	V4	1-1/2" body width, 168.6mm 1/2" VCR male
	Order V1 + 318Z138BNA	1-1/2" body width, 192.4mm 1/2" VCR male
	C1	1-1/2" body width, 92mm 3/8" C Seal
	C2	1-1/2" body width, 114mm 3/8" C Seal
VIII. Downstream	A	Atmosphere
	V	Vacuum; Default for SD, SL and HA special application
IX. Sensor	O	Default Sensor Orientation

Table 5-3 GF101, GF121 & GF126 Code with Analog and DNET Communications (Continued)

Code Description	Code Option	Option Description
X. Communications/Connector	BX	Cable adapter to 15 pin D Brooks (Unit "B","N"); adapts G1 base
	EX	Cable adapter to card edge (w/out VTP), RS485 through RJ11 jacks (Unit"E"; IN "L", "R"); adapts G1 base
	FX	Cable adapter with 9 pin STEC pin-out & jack screws (w/VTP) (Unit"F","O"); adapts SX base
	G1	9-Pin D with RS485 (Unit"G")
	GX	9-Pin D with RS485 (Unit"G") (Not Available on 79.8mm fitting DX, YX, EX)
	JX	Cable adapter with 9 pin STEC pin-out & jack screws (w/VTP) (Unit"J","W"); adapts SX base
	KX	Cable adapter to MKS 15-Pin D (Unit "K"); adapts G1 base
	SX	9 pin D with STEC pin-out (w/VTP) (Unit "S","Q")
	UX	Cable adapter to 15 pin D (w/VTP) (Unit & TN "U"); adapts SX base

DeviceNet Standard Configuration Parameters

Code Option	I/O	Connector	Power On State	Full Scale Setting	Full Scale Setting	Full Scale Setting	Poll I/O Instance Producer	Poll I/O Instance Consumer	Poll I/O State Transition	External Baud Rate
D0	DeviceNet	5 Pin Micro	Idle	Count	Integer	6000h	2	7	Executing	500KB
D1	DeviceNet	5 Pin Micro	Idle	Count	Integer	6000h	21	7	Executing	500KB
D2	DeviceNet	5 Pin Micro	Idle	SCCM	Float	7FFFh	13	19	Executing	500KB
D3	DeviceNet	5 Pin Micro	Idle	Count	Integer	6000h	22	7	Executing	500KB
D4	DeviceNet	5 Pin Micro	Executing	Count	Integer	6000h	22	8	Executing	500KB
D5	DeviceNet	5 Pin Micro	Idle	Count	Integer	6000h	6	8	Executing	500KB
D6	DeviceNet	5 Pin Micro	Idle	Count	Integer	7FFFh	3	7	Executing	500KB
D7	DeviceNet	5 Pin Micro	Idle	Count	Integer	7FFFh	6	8	Executing	500KB
D8	DeviceNet	5 Pin Micro	Idle	Count	Integer	6000h	3	7	Executing	500KB
D9	DeviceNet	5 Pin Micro	Executing	Count	Integer	6000h	2	7	Executing	500KB
DA	DeviceNet	5 Pin Micro	Idle	Count	Integer	7FFFh	22	7	Executing	500KB
DB	DeviceNet	5 Pin Micro	Idle	Count	Integer	6000h	22	8	Executing	500KB
DC	DeviceNet	5 Pin Micro	Idle	Count	Integer	7FFFh	3	7	Idle	500KB
DD	DeviceNet	5 Pin Micro	Executing	Count	Integer	7FFFh	22	8	Executing	500KB
DE	DeviceNet	5 Pin Micro	Executing	SCCM	Float	6000h	15	19	Executing	500KB
DX	DeviceNet	5 Pin Micro	To be defined by Customer Special Request							

XI. Customer Special Request	XXXX	Customer Special Request Number
XII. Auto Shut-Off	A	Auto Shut-Off (Included)
	X	Auto Shut-Off (Not Included) (Must be selected for meter)
XIII. Auto Zero	A	Auto Zero (Included)
	X	Auto Zero (Not Included)
XIV. Reference Temperature	000	0°C Reference Calibration (Standard) - Default Setting

Standard Sample Model Code

I	II	III	IV	V		VI		VII	VIII	IX	X		XI	XII	XIII		XIV
GF	101	C	XX	C	-	SH52 100L	-	V1	A	O	G1	-	XXXX	A	X	-	000

Table 5-4 GF101, GF121 & GF126 Series Communications Product Description Code EtherCAT Communications

Code Description	Code Option	Option Description
I. Base Model Code	GF	High Purity/Ultra High Purity Digital Mass Flow Controllers
II. Package / Finish Specifications	101	Flow range 55 - 300 slm N_2 Eq.; 10 Ra HP wetted flow path
	121	Flow range 55 - 300 slm N_2 Eq.; 5 Ra UHP wetted flow path
	126	Flow range 55 - 300 slm N_2 Eq.; 5 Ra UHP wetted flow path & integrated pressure measurement
III. Configurability	C	MultiFlo capable
	X	Not configurable
IV. Special Application	XX	Standard
V. Valve Configuration	C	Normally Closed valve
	M	Meter (No Valve)
VI. Gas or SH MultiFlo Bin	XXXX XXXX	Specific Gas Code & Range, i.e. "0004" = Argon and "100L" = 100 slpm
	SH51 055L	Standard Configuration #51, 55,001 sccm N_2 Equivalent (0°C Reference) Special Bin for low density gases, e.g. 73,002-120,000 He, 100,002-170,000 H_2
	SH52 100L	Standard Configuration #52, 55,002-100,000 sccm N_2 Equivalent (0°C Reference)
	SH53 200L	Standard Configuration #53, 100,001-200,000 sccm N_2 Equivalent (0°C Reference)
	SH54 300L	Standard Configuration #54, 200,001-300,000 N_2 Equivalent (0°C Reference)
VII. Fitting	V1	1-1/2" body width, 134mm 1/2" VCR male
	C1	1-1/2" body width, 92mm 3/8" C Seal
	C2	1-1/2" body width, 114mm 3/8" C Seal
VIII. Downstream	A	Atmosphere
	V	Vacuum; Default for SD, SL and HA special application
IX. Sensor	O	Default Sensor Orientation
X. Connector	E0	EtherCAT Communication
XI. Customer Special Request	XXXX	Customer Special Request (CSR) Number
XII. Auto Shut-Off	A	Auto Shut-Off (Included)
	X	Auto Shut-Off (Not Included)
XIII. Auto Zero	X	Auto Zero (Not Included)
XIV. Reference Temperature	000	0°C Reference Calibration (Standard) - Default Setting

Table 5-5 GF120xHT Series Communications Product Description Code

Code Description	Code Option	Option Description
I. Base Model Code	GF	Ultra High Purity Digital Mass Flow Controller and Meter
II. Package / Finish Specifications	120	Flow range 50 SCCM - 5 SLPM N_2 Eq
III. Configurability	X	Gas Code and Range Required
IV. Special Application	HT	High Temperature (up to 150°C)
V. Valve Configuration	C	Normally Closed Valve
	M	Meter (No Valve)
VI. Gas Range	XXXX XXXX	Specific Gas Code & Range, i.e. "0004" = Argon and "001L" = 1 SLPM
VII. Fitting	VX	1-1/2" body width, 124mm 1/4" VCR male
	VS	1-1/8" body width, 124mm 1/4" VCR male
	CX	1-1/8" body width, 92mm C Seal
	WX	1-1/8" body width, 92mm W Seal
	BX	1-1/2" body width, 92mm W Seal
	LX	1-1/8" body width, 92mm C Seal w/Poke Yoke
VIII. Downstream Condition	A	Atmosphere
	V	Vacuum
IX. Sensor	O	Default Sensor Orientation
X. Communications/Connector	E0	EtherCAT Communication
	BX	Cable adapter to 15 pin D adapts G1 base
	EX	Adapter to Card Edge (w/out VTP), RS485 through RJ11 jacks adapts GX base
	FX	Cable adapter with 9 pins STEC pin-out & jack screws (w/VTP) adapts SX base
	GX	9-Pin D with RS485; display and overlay 180° orientation
	G1	9-Pin D with RS485
	HX	Adapter to Cardedge adapts to G1 base
	IX	Adapter to Cardedge adapts to GX base
	JX	Cable adapter with 9 pin STEC pin-out & jack screws (w/VTP) adapts SX base
	KX	Cable adapter to MKS 15-Pin D; adapts G1 base
	QX	Adapter to Cardedge (w/out VTP) adapts to SX base
	SX	9 pin D with STEC pin-out (w/VTP)
	UX	Cable adapter to 15 pin D (w/VTP) adapts SX base

Option	I/O	Connector	Power On State	Full Scale Setting	Full Scale Setting	Full Scale Setting	Poll I/O Instance Producer	Poll I/O Instance Consumer	Poll I/O State Transition	External Baud Rate
D0	DeviceNet	5 Pin Micro	Idle	Count	Integer	6000h	2	7	Executing	500KB
D1	DeviceNet	5 Pin Micro	Idle	Count	Integer	6000h	21	7	Executing	500KB
D2	DeviceNet	5 Pin Micro	Idle	SCCM	Float	7FFFh	13	19	Executing	500KB
D3	DeviceNet	5 Pin Micro	Idle	Count	Integer	6000h	22	7	Executing	500KB
D4	DeviceNet	5 Pin Micro	Executing	Count	Integer	6000h	22	8	Executing	500KB
D5	DeviceNet	5 Pin Micro	Idle	Count	Integer	6000h	6	8	Executing	500KB
D6	DeviceNet	5 Pin Micro	Idle	Count	Integer	7FFFh	3	7	Executing	500KB
D7	DeviceNet	5 Pin Micro	Idle	Count	Integer	7FFFh	6	8	Executing	500KB
D8	DeviceNet	5 Pin Micro	Idle	Count	Integer	6000h	3	7	Executing	500KB
D9	DeviceNet	5 Pin Micro	Executing	Count	Integer	6000h	2	7	Executing	500KB
DA	DeviceNet	5 Pin Micro	Idle	Count	Integer	7FFFh	22	7	Executing	500KB
DB	DeviceNet	5 Pin Micro	Idle	Count	Integer	6000h	22	8	Executing	500KB
DC	DeviceNet	5 Pin Micro	Idle	Count	Integer	7FFFh	3	7	Idle	500KB
DD	DeviceNet	5 Pin Micro	Executing	Count	Integer	7FFFh	22	8	Executing	500KB
DE	DeviceNet	5 Pin Micro	Executing	SCCM	Float	6000h	15	19	Executing	500KB
DX	DeviceNet	5 Pin Micro	To be defined by Customer Special Request							

Table 5-5 GF120xHT Series Communications Product Description Code (Continued)

XI. Customer Special Request	XXXX	Customer Special Request Number; required with "DX" Conn. Option to define DNet settings
XII. Auto Shut-Off	A	Auto Shut-Off (Included)
	X	Auto Shut-Off (Not Included) (Must be selected for meter)
XIII. Auto Zero	X	Auto Zero (Not Included)
XIV. Reference Temperature	000	0°C Reference Calibration (Standard) - Default Setting
XV. Operating Temperature	XXX	Operating Temperature Value in five degree intervals from 45°C to 150°C 45°C = 045, 100°C = 100, 150°C = 150
XVI. Cable Length	X	3ft
	M	8ft
	L	16.5ft

Sample GF120xHT Model Code

I	II	III	IV	V		VI		VII	VIII	IX	X		XI	XII	XIII		XIV		XV	XVI
GF	120	X	HT	M	-	0013100C	-	VX	A	O	GX	-	XXXX	X	X	-	000	-	100	M

GF100 Series Ordering Instructions

Refer to the Product Description Codes on the previous pages. Starting from the left, choose the product code options as follows:

1. Required performance model.
   a. Standard Performance, non-PTI: **GF100**
   b. High Performance, non-PTI: **GF120**
   c. High Performance, w/ PTI: **GF125**
   d. Standard Performance, High Flow, Non-PTI: **GF101**
   e. High Performance, High Flow, Non-PTI: **GF121**
   f. High Performance, High Flow, w/PTI: **GF126**
2. Configurability
   a. Disabled: **X**
   b. Enabled: **C**, Standard
3. Specialty Application
   a. Safe Delivery, for GF120 only: **SD**
   b. High Temperature (Up to 150°C), for GF120x only: **HT**
   c. No Specialty App: **XX**
4. Valve Configuration
   a. Normally Closed: **C**
   b. Normally Open: **O**
   c. Meter: **M**
5. Gas or SH MultiFlo Bin
   a. If Gas Specific, enter SEMI gas code: ex. **0013**, for N2
   b. If SH MultiFlow Bin: **SHnn**, nn being the required SHBin, 40 - 50 or 51 - 54 (High Flow)
3. Maximum Flow
   a. If Gas Specific, enter maximum range in sccm, “C” or slm “L”: ex. **500C**
   b. If SH Bin, enter defined maximum flow: ex. **860**, choosing SH44, 281 - 860 sccm
7. Fitting
   a. Enter 2-character option code as defined: ex. **CX**, 1 1/8” C Seal 92mm
8. Downstream Condition
   a. Outlet to Vacuum: **V**
   b. Outlet to Atmosphere: **A**
9. Sensor
   a. Orthogonal: **O**, this is default, non-selectable
10. Connector
   a. Enter 2-character option code as defined: ex. **DX**, DeviceNet
11. CSR
   a. Customer Special Requirement, contact Brooks Apps Engineering for review of requirement and creation of CSR: **nnnn**
   b. If DNET connector, CSR required to define DNET attributes: **0924**, generic, ODVA Std. configuration
   c. None Required: **XXXX**
12. Auto Shut-Off.
   a. Enabled: **A**
   b. Disabled: **X**
13. Auto Zero
   a. Disabled: **X**
14. Reference Temperature in Degrees C
   a. 0°C Reference Calibration (Standard): **000**, default

15. Operating Temperature in Degrees C (for GF120xHT product only)
    a. Operating temperature in five degree intervals from 10°C to 150°C: **150**
16. Operating Temperature in Degrees C (for GF120xHT product only)
    a. 3ft: **X**
    b. 8ft: **M**
    c. 16.5ft: **L**

Here is an example of a configured Product Description Code (PDC) for a GF125, Configurable, no Specialty Application, Valve Normally Closed, MultiFlo for 281-860 sccm, 1 1/8” C Seal 92mm, outlet to Vacuum, default sensor, DNET, CSR-0924, Auto Shut Off enabled, Auto Zero disabled and Default Reference Temperature: **GF125CXXC-SH44860C-CXVODX-0924AX-000**

Here is an example of a configured Product Description Code (PDC) for a GF120, Configuration Disabled, High Temperature, Valve Normally Closed, Nitrogen, 280scm, 1 1/8” C Seal 92mm, Outlet to Vacuum, de-fault sensor, DNET, no CSR, Auto Shut Off enabled, Auto Zero disabled, Default Reference Temperature, 150°C operating temperature, 3ft Cable. **GF120XHTC-0013280C-CXVOD0-XXXXAX-000-150X**

GF100/GF120xHT/GF101 Series Patents

The GF100/GF120xHT/GF101 Series may be protected by the following US patents and their international filings.

Table A-1 GF100/GF120xHT/GF101 Series Patents

Patent/Pub. No.	Title
6343617	System and method of operation of a digital mass flow controller
6389364	System and method for a digital mass flow controller
6425281	Pressure insensitive gas control system
6445980	System and method for a variable gain proportional-integral (PI) controller
6539792	Method and apparatus for balancing resistance
6640822	System and method of operation of a digital mass flow controller
6681787	System and method of operation of a digital mass flow controller
6714878	System and method for a digital mass flow controller
6752166	Method and apparatus for providing a determined ratio of process fluids
6826953	Flow sensor
6845659	Variable resistance sensor with common reference leg
6910381	System and method of operation of an embedded system for a digital capacitance diaphragm gauge
6941965	Method and apparatus for providing a determined ratio of process fluids
6962164	System and method for a mass flow controller
7043374	Flow sensor signal conversion
7073392	Methods and apparatus for pressure compensation in a mass flow controller
7082824	Variable resistance sensor with common reference leg
7113895	System and method for filtering output in mass flow controllers and mass flow meters
7114511	System and method for a mass flow controller
7133785	Valve control system and method
7143774	Method and apparatus for providing a determined ratio of process fluids
7150201	System and method for measuring flow
7216019	Method and system for a mass flow controller with reduced pressure sensitivity
7231931	System and method for a mass flow controller
7243035	System and method for mass flow detection device calibration
7272512	Flow sensor signal conversion
7273063	Methods and apparatus for pressure compensation in a mass flow controller
7287434	System and method for measuring flow
7360551	Method and apparatus for providing a determined ratio of process fluids
7363182	System and method for mass flow detection device calibration
7380564	System and method for a mass flow controller
7409871	Mass flow meter or controller with inclination sensor
7412986	Method and system for flow measurement and validation of a mass flow controller
7424894	Method and apparatus for providing a determined ratio of process fluids
7434477	Methods and apparatus for pressure compensation in a mass flow controller

LIMITED WARRANTY

Visit www.BrooksInstrument.com for the terms and conditions of our limited warranty.

BROOKS SERVICE AND SUPPORT

Brooks is committed to assuring all of our customers receive the ideal flow solution for their application, along with outstanding service and support to back it up. We operate first class repair facilities located around the world to provide rapid response and support. Each location utilizes primary standard calibration equipment to ensure accuracy and reliability for repairs and recalibration and is certified by our local Weights and Measures Authorities and traceable to the relevant International Standards.

Visit www.BrooksInstrument.com to locate the service location nearest to you.

START-UP SERVICE AND IN-SITU CALIBRATION

Brooks Instrument can provide start-up service prior to operation when required.
For some process applications, where ISO-9001 Quality Certification is important, it is mandatory to verify and/or (re)calibrate the products periodically. In many cases this service can be provided under in-situ conditions, and the results will be traceable to the relevant international quality standards.

CUSTOMER SEMINARS AND TRAINING
Brooks Instrument can provide customer seminars and dedicated training to engineers, end users and maintenance persons.

Please contact your nearest sales representative for more details.

Due to Brooks Instrument's commitment to continuous improvement of our products, all specifications are subject to change without notice.

TRADEMARKS
Brooks and MultiFlo are trademarks of Brooks Instrument, LLC
All other trademarks are the property of their respective owners.

Installation-Manual-GF100-GF120xHT-GF101-EN/541B137AAG/2026-05

Global Headquarters
Brooks Instrument
407 West Vine Street
Hatfield, PA
19440-0903 USA

Toll-Free (USA): 888-554-FLOW
T: 215-362-3500
BrooksAM@BrooksInstrument.com

A list of all Brooks Instrument locations and contact details can be found at www.BrooksInstrument.com

©Copyright 2026 Brooks Instrument, LLC All rights reserved. Printed in U.S.A.

BROOKS® INSTRUMENT
Beyond Measure