ARTISAN®
TECHNOLOGY GROUP

Your **definitive** source for quality pre-owned equipment.

Artisan Technology Group
(217) 352-9330 | sales@artisantg.com | artisantg.com

Full-service, independent repair center
with experienced engineers and technicians on staff.

We buy your excess, underutilized, and idle equipment
along with credit for buybacks and trade-ins.

Custom engineering
so your equipment works exactly as you specify.

- Critical and expedited services
- In stock / Ready-to-ship
- Leasing / Rentals / Demos
- ITAR-certified secure asset solutions

Expert team | Trust guarantee | 100% satisfaction

All trademarks, brand names, and brands appearing herein are the property of their respective owners.

Brooks Automation
Atmospheric Single-Arm Robot
User's Manual

for the Atmospheric Top Mount
(ATM 100, 200, 300, 400, 500),

the Atmospheric Bottom Mount
(ABM 100, 200, 400, 500),

and the Flat Panel Display
(FPD 400, 500, 700)

Revision 1

Artisan Technology Group - Quality Instrumentation ... Guaranteed | (888) 88-SOURCE | www.artisantg.com

Information provided within this document is subject to change without notice, and although believed to be accurate, Brooks Automation assumes no responsibility for any errors, omissions, or inaccuracies.

If you have any questions or comments about this manual, please complete the Reader's Comment Form provided at the back of this manual and return it to the Technical Publications Dept. at Brooks Automation.

AcuLigner, AcuLine, AcuTran, AcuTrav, AquaTran, Atmospheric Dual Arm Controller, Atmospheric Express, Atmospheric Pre-aligner, Atmospheric Single-Arm Robot, BiSymmetrik, Dual Controller, ExpressLock, EQT 32, EQT 200, FabExpress, FrogLeg, Gemini, Gemini Express, Gemini Express Tandem, Hercules, Hercules Express, InCooler, InLigner, InLine Express, Integrated Front End, Leapfrog, Linear eXchange, Linear Track, MagnaTran 7, MagnaTran 8 2-Axis, MagnaTran 8 3-Axis, MagnaTran 8 DFR, Marathon, Marathon Express, Marathon Express Tandem, MultiTran, PASIV, PowerPak, Reliance ATR, Reliance DFR, Reliance WCR, Smart Controller, TCM, Time Optimal Trajectory, TopCooler, Ultrasort, VacuTran, VCD, VCE, WAVE, WAVE II, and Z-Bot are trademarks of Brooks Automation.
All other trademarks are properties of their respective owners.

© Brooks Automation 2003, All Rights Reserved. The information included in this manual is Brooks Proprietary Information and is provided for the use of Brooks customers only and cannot be used for distribution, reproduction, or sale without the expressed written permission of Brooks Automation. This information may be incorporated into the user's documentation, however any changes made by the user to this information is the responsibility of the user.

Brooks Automation
15 Elizabeth Drive
Chelmsford, Ma. 01824
Phone (978) 262-2400
Fax (978) 262-2500
www.brooks.com

September 12, 2005 Revision 1 Per EC #33327 Part Number 127206
This manual is available in the following formats:
CD-ROM: Part Number 127207
This manual is available in the following languages: English.

This technology is subject to United States export Administration Regulations and authorized to the destination only; diversion contrary to U.S. law is prohibited.

Printed in the U.S.A.

Artisan Technology Group - Quality Instrumentation ... Guaranteed | (888) 88-SOURCE | www.artisantg.com

Contents

Figures ix

Tables xi

Changes xiii

Introduction

Atmospheric Single-Arm Robot Overview 1-2
- Robot Accessories 1-4
- Robot Systems 1-5
- User Interfaces 1-7
- Configuration 1-8

About This Manual 1-10

Note, Hazards, andPictograms 1-11

Specifications 1-12
- Robot Specifications. 1-12
- Site Requirements for Moving the Atmospheric Single-Arm Robot 1-12
- Environmental Specifications. 1-12
- Center of Gravity 1-13
- Electrical Specifications. 1-14
- Mechanical Specifications. 1-14
- Vacuum Specifications 1-15
- Seismic Specifications 1-15

Artisan Technology Group - Quality Instrumentation ... Guaranteed | (888) 88-SOURCE | www.artisantg.com

Safety

Regulatory Compliance 2-2

Safety Considerations 2-3
- Personnel Safety Guidelines 2-3
- Equipment Safety Guidelines 2-4

Robot Safeguards 2-6

Emergency Stop (EMS/MOFF) 2-7

EMC and ESD Protection 2-9
- ESD/EMI Precautions 2-9

Safety Labels 2-10
- Laser Warning Labels 2-10
- High Voltage Label 2-11
- Pinch Point Label for SEMI S2 Systems 2-11
- Fuse Label 2-11
- Underwriter Lab Label 2-12
- Manufacturing Labels 2-12

SEMI S2 Systems 2-13

Safety Interlocks 2-14

Mechanical Hazards 2-15

Electrical Hazards 2-17
- Lockout/Tagout 2-17
- Electrical Hazard Classifications 2-18

Laser Hazards 2-20

Gas Hazards 2-21

Chemical Hazards 2-22

Thermal Hazards 2-23

Vacuum Hazards 2-24

Fire and Explosion Hazards 2-25

Environmental Hazards 2-26
- Noise 2-26
- Vibration 2-26

Teach Pendant 2-27
- Using the EMERGENCY STOP 2-27
- Using the Dead-Man Switch 2-27

Matrix of Emergency and Corrective Response Actions 2-29

Material Safety Information 2-30

Artisan Technology Group - Quality Instrumentation ... Guaranteed | (888) 88-SOURCE | www.artisantg.com

Isopropyl Alcohol Safety Information 2-31
MSDSs for C Grease. 2-32
MSDS for LG 2 Grease. 2-34
MSDS for Braycote 803 2-36

Installation

Site Requirements 3-2
Space 3-2
Environmental 3-2
Facilities Requirements 3-2

Unpacking and Inspection 3-4
Unpacking Instructions. 3-4

Installation Procedure 3-6
Tools and Materials 3-6
Mounting. 3-6
Moving the Robot or Robotic system 3-7
Attaching the Robot to the Frame 3-8
Leveling the Robot. 3-8

Connecting the Robot and Controller. 3-11
Overcurrent Protection 3-12
Facilities Connections 3-13
Communication Connections. 3-14
Connecting the Teach Pendant 3-15
Installing the EQT 32 Interface. 3-16

Setup 3-18
Verifing Connections. 3-18
Adjusting the Vacuum Sensor 3-19
Verifying Vacuum Sensor Connections 3-19

Safety Verification 3-20

Teaching and Operating 3-21
Robot Axis and Station Naming Conventions. 3-21

Check-out 3-23

Alignment and Calibration. 3-24

Subsystems

System Overview 4-2
Smart Controller. 4-3
Wafer Pre-Aligner 4-3

Artisan Technology Group - Quality Instrumentation ... Guaranteed | (888) 88-SOURCE | www.artisantg.com

Linear Track 4-3
User Interfaces 4-4
Robot Accessories 4-5
End Effectors 4-5
Laser Scanner 4-5

Operational Interfaces

Interface Overview 5-2
Power Connections 5-4
Electrical Connections 5-4
High Voltage Barriers 5-4
Controller Fuses 5-4
Ground Connections 5-4
Robot Cables 5-5

Operation

Theory of Operation 6-2
Moving and Homing a Robot Axis 6-3
Teaching Stations 6-4
Setting the Optional Z-Axis Brake 6-5
Teaching a Robot Only 6-6
Teaching a Robot and Pre-Aligner 6-7
Scanner Mapping 6-9
Teaching the Scanner Mapping 6-11
Teaching the Scanner in Special Situations 6-13
Robot Parameter File 6-14
Adjusting Robot Parameters 6-15
Flipper End Effector 6-16
Accessing Galil Mode 6-16
Finding the Home Switch 6-16
Applying Tension to the Spring 6-17
Defining the Flip 6-17
Saving the Positions 6-18
Testing the Flipper 6-19

Artisan Technology Group - Quality Instrumentation ... Guaranteed | (888) 88-SOURCE | www.artisantg.com

Adjustments and Calibration

Atmospheric Single-Arm Robot Alignment 7-2
Required Tools and Test Equipment. 7-2
Alignment Strategy 7-2
Alignment Process 7-3
Leveling the Atmospheric Single-Arm Robot 7-4
Adjusting the Vacuum Sensor 7-4

Flipper Setup 7-6
Setting up the Flipper 7-6

Tuning PID Motor Parameters. 7-9
To tune the PID 7-9

Robot Radial Home Flag, Index, and Offset Adjustments. 7-11
Tools and Equipment 7-11
To Adjust the Physical Position of the Home Flag:. 7-11
To Check and Adjust the Physical Position at the Index Position 7-13
To Set the Home Offset 7-14

Command Reference

Description 8-2
Software Control 8-2
Macros 8-2
Coordinate File 8-3
Robot Parameter File 8-3

Commands and Macros for Robots. 8-4
Coordinate File 8-4

Maintenance

Preventive Maintenance 9-2
Parts 9-2

Preventive Maintenance Schedule and Procedures 9-3

Cleaning. 9-4

Robot Leadscrew Lubrication Procedure. 9-6
Tools Required Depending on your Robot 9-6
Removal of the robot to be lubricated. 9-6
Determining which grease to use on your robot. 9-7

Vacuum Hose Replacement for the Outer Arm Link. 9-11
Required Parts and Tools 9-11

Artisan Technology Group - Quality Instrumentation ... Guaranteed | (888) 88-SOURCE | www.artisantg.com

Procedure 9-11

Checking the Integrity of the Belts in the Robot 9-14
Tools Required: 9-14
Procedure for the Inspection of the Robot Outer Link 9-14

Diagnostics for the Single-Arm Robot 9-16
Using EQT to Run Diagnostics 9-17
Test 1: NVS-Ram Test 9-18
Test 2: Galil and I/O Test 9-19
Testing Input G. 9-19
Test 3: Encoder Read 9-21
Test 4: Limit and Home Test 9-22
Test 7: Servo Test 9-23
Test 8: Home Test and Set. 9-24
Adjusting the Distance to Index on an ABM 400 Series with Track. 9-25
Test 9: R-Home Test and Set. 9-27
Test 10: Scaling Factor Test 9-28
Test 11: Vacuum Valve and Vacuum Sensor Test 9-29
Test 13: Scanning Test 9-30

Using the Teach Pendant to Run Diagnostics 9-31
STEP #1 (NVSRAM Test) 9-31
STEP #2 (GALIL & I/O TEST) 9-32
STEP #3 (ENCODER READ TEST) 9-35
STEP #4 (LIMIT & HOME TEST) 9-35
STEP #5 (AMP. BOARD SETUP). 9-36
STEP #6 (AMP. MODULE SETUP) 9-36
STEP #7 (SERVO TEST) 9-36
STEP #8 (HOME TEST & SET). 9-36
STEP #9 (R-HOME TEST & SET). 9-38
STEP #10 (SCALING FACTOR TEST) 9-41
STEP #11 (VAC. VALVE/SENSOR) 9-41
STEP #12 (ROBOT I/O'S) 9-42
STEP #13 (SCANNING) 9-42

Troubleshooting

Troubleshooting Overview. 10-2

Troubleshooting Robot Start up 10-3
Robot Start Up Procedure. 10-3
Robot Will Not Home Procedure 10-6
Robot Will Not Servo On 10-8

Using the Teach Pendant and EQT 32 to Troubleshoot 10-10

Common Problems 10-11

Artisan Technology Group - Quality Instrumentation ... Guaranteed | (888) 88-SOURCE | www.artisantg.com

Frequently Asked Questions 10-12
What do I do if I get a new robot? 10-12
What do I do if I get a new controller? 10-12

Checking Robot Status 10-14
Using the STAT/STAT2 Command 10-15

Checking NVSRAM with **RNCS** Command 10-18

Checking Limit Switch Status with the **RLS** Command 10-19

Using the **GLST** Command 10-23

Problem Causes and Suggested Actions 10-25

Aftermath Analysis 10-29

Contact Brooks Automation Technical Support 10-31

Appendices

Appendix A: Factory Default Settings 11-2

Appendix B: Approved Laser Scanners. 11-3
Available Configurations of the HAMA Laser Sensors 11-4

Drawings

Artisan Technology Group - Quality Instrumentation ... Guaranteed | (888) 88-SOURCE | www.artisantg.com

This Page Intentionally Left Blank

Artisan Technology Group - Quality Instrumentation ... Guaranteed | (888) 88-SOURCE | www.artisantg.com

Figures

Figure	Title	Page
1-1	Atmospheric Single-Arm Robots	1-2
1-2	Atmospheric Top-Mount and Bottom -Mount Robots	1-3
1-3	Atmospheric Dual Arm Robot	1-4
1-4	Atmospheric Wafer Pre-Aligner	1-6
1-5	Robot Mounted to the Linear Track	1-6
1-6	Terminal Emulation Window (EQT)	1-8
1-7	Teach Pendant	1-8
1-8	Note, Caution, Warning, and Danger	1-11
1-9	Atmospheric Single-Arm Robot Center of Gravity	1-14
2-1	Robot System Safety Enclosure	2-6
2-2	Emergency Stop Circuit and Interconnect Diagram	2-8
2-3	Teach Pendants Models TTR 200 and TTR 100	2-27
3-1	Lift Points for the Robot	3-8
3-2	Leveling the Robot Arm	3-9
3-3	Robot Connections	3-11
3-4	Controller Connections	3-15
3-5	Terminal Mode Window	3-17
3-6	Polar Coordinate Positions	3-21
4-1	Atmospheric System Overview	4-2
5-1	Typical Robot Connections	5-3
5-2	Folding a Cable	5-5
5-3	Folded Cable Tie-Wrapped	5-5
7-1	Vacuum Sensor Potentiometer	7-5
7-2	Center to Center Distance	7-12
7-3	Center Overlapping Position (COP)	7-13
9-1	Zerk Fittings	9-8
9-2	Hole in Nut Holder	9-8

Artisan Technology Group - Quality Instrumentation ... Guaranteed | (888) 88-SOURCE | www.artisantg.com

9-3 Zerk Fitting being Placed in the Threaded Grease Hole 9-9
9-4 Diagnostic Window 9-17
9-5 NVS-RAM Window 9-18
9-6 Galil and I/O Test Results Box 9-19
9-7 Input G Details! Information Box 9-20
9-8 Encoder Read Test Information Box 9-21
9-9 Limit and Home Test Dialog Box 9-22
9-10 Servo Test Dialog Box 9-23
9-11 Home Test and Set: Waiting for Selection Dialog Box 9-24
9-12 Homing the Z Axis 9-24
9-13 Home Test and Set Dialog Box. 9-27
9-14 Scaling Factor Test Dialog Box. 9-28
9-15 Vacuum Valve/Sensor Test Dialog Box 9-29
9-16 Scanning Test Dialog Box 9-30
9-17 Hojming the Z Axis 9-37
9-18 Center Overlapping Position 9-38
9-19 Arm Showing Arm Pulley Bolts 9-39
9-20 Axis R Moved to the Index Position 9-40

10-1 Robot Will Not Start Up Flow Chart. 10-5
10-2 Robot Will Not Home Flow Chart. 10-6
10-3 Robot Will Not Servo On Flow Chart 10-8
10-4 Information Request Results Box 10-15

12-1 I/O Version 3 Schematic. 12-2
12-2 TTR-200 Teach Pendant DB37 12-3
12-3 TTR-200 Teach Pendant DB68 12-4

Artisan Technology Group - Quality Instrumentation ... Guaranteed | (888) 88-SOURCE | www.artisantg.com

Tables

Table	Title	Page
1-1	Robot Configuration Matrix	1-9
2-1	Safety Agencies	2-2
2-2	Electrical Hazard Classifications	2-19
2-3	Emergency Action Matrix	2-29
2-4	Material Safety Information	2-30
3-1	Cable Connections	3-18
6-1	Teach Pendant Hotkeys	6-12
6-2	Commands for Changing Robot Parameters	6-15
6-3	Galil Commands to Find the Edge of the Home Switch for the W Axis	6-16
6-4	PR Comman to Specify aMove of a Numbe or Steps	6-17
7-1	Galil Commands to Find the Home Switch	7-6
8-1	Short List of Useful Commands and Macros	8-4
9-1	Preventive Maintenance Schedule	9-3
9-2	Diagnostic Tests	9-16
9-3	Galil Commands	9-25
9-4	Keys Recognized During Diagnostic Mode	9-31
9-5	Robot Signal Cable Bits for Input Port G	9-33
10-1	Stat for Robot Will Not Start Up Flow Chart	10-3
10-2	Input G for Robot Will Not Start Up Flow Chart	10-4
10-3	Stat for Robot Will Not Home Flow Chart	10-7
10-4	Input G for Robot Will Not Home Flow Chart	10-7
10-5	Stat for Robot Will Not Servo On Flow Chart	10-9
10-6	Commands to Check Connections	10-14
10-7	Problem and Suggested Recovery for the 16 Status Bits	10-16
10-8	Information in a 16-bit Status Word for Command RNCS	10-18
10-9	Bit Comparison Between 6.0+ Firmware and Earlier Versions	10-20

Artisan Technology Group - Quality Instrumentation ... Guaranteed | (888) 88-SOURCE | www.artisantg.com

10-10 16 Bit Response to Firmware Earlier that 6.0 to the **RLS** Command 10-21
10-11 Response to the GLST Command in 6.0+ Compared to Earlier Versions10-23
10-12 **GLST** Command Response for Firmware Earlier that 6.0. 10-24
10-13 Troubleshooting Communication 10-25
10-14 Troubleshooting Axis Cannot Servo 10-25
10-15 Troubleshooting Axis Cannot HOME 10-26
10-16 Troubleshooting Robot Stops During Normal Operation 10-27
10-17 Troubleshooting Repeatability Problems. 10-27
10-18 Troubleshooting Lost Station Values 10-28
10-19 Troubleshooting Erratic Movement 10-28

11-1 Operational and Teach Mode. 11-2
11-2 Hana Laser Sensor Model Numbers and Options 11-4

Artisan Technology Group - Quality Instrumentation ... Guaranteed | (888) 88-SOURCE | www.artisantg.com

Changes

Overview

Changes may be made to this manual to ensure that it will continue to provide the most complete documentation possible for the Brooks Automation Atmospheric Single-Arm Robot. This section provides a brief description of each change.

This manual is not a controlled copy. Updates to this manual may be made as Technical Support Bulletins or as a new revision. To verify this manual is the current revision, call Brooks Automation Customer Support.

Revision 1

This manual was previously released as PRI Automation OEM Systems *Atmospheric Single-Arm Robot Manual* part number 4000-0016 Revision B.

The following Technical Memos were added into the manual:

- 6-0000-0002-TM Flipper Setup Procedure
- 6-0000-0003-TM Procedure for PID Parameter Tuning
- 6-0000-0005-TM Procedure to Set Up Robot Radial Axis
- 6-0000-0007-TM Adjust Distance to Index
- 6-0000-00013-TM Robot Configuration Matrix
- 6-0000-0016 TM Robot Leveling
- 4000-0176 Robot Start-up Troubleshooting
- 4000-0177 Hama Sensors Configurations
- 4000-0918 Vacuum Hose Replacement for ATM Outer ARM LINK
- 4000-0920 Belt Inspection for ATM Robot Outer Link

Artisan Technology Group - Quality Instrumentation ... Guaranteed | (888) 88-SOURCE | www.artisantg.com

This Page Intentionally Left Blank

Artisan Technology Group - Quality Instrumentation ... Guaranteed | (888) 88-SOURCE | www.artisantg.com

1 Introduction

Overview

This Introduction provides a brief overview of Brooks Automation Atmospheric Single-Arm Robot, highlighting its features, subsystems, operation, and specifications. Additionally, the chapter organization and a description of each chapter's contents is presented, and notation conventions are explained.

Chapter Contents

Atmospheric Single-Arm Robot Overview 1-2
- Robot Accessories 1-4
- Robot Systems 1-5
- User Interfaces 1-7
- Configuration 1-8

About This Manual 1-10

Note, Hazards, andPictograms 1-11

Specifications 1-12
- Robot Specifications. 1-12
- Site Requirements for Moving the Atmospheric Single-Arm Robot 1-12
- Environmental Specifications. 1-12
- Center of Gravity 1-13
- Electrical Specifications. 1-14
- Mechanical Specifications. 1-14
- Vacuum Specifications 1-15
- Seismic Specifications 1-15

Artisan Technology Group - Quality Instrumentation ... Guaranteed | (888) 88-SOURCE | www.artisantg.com

Atmospheric Single-Arm Robot Overview

Brooks Automation robots are Class 1 cleanroom-compatible. Robot mechanics are free of backlash, resulting in 3σ repeatability of ±25 microns. The low-inertia design enables rapid motion without sensitivity loss in the closed-loop DC-servo system. There are no motors above the mounting surface and the robots have only sealed cleanroom motors, belts, and pulleys.

Figure 1-1: Atmospheric Single-Arm Robots

Brooks Automation robots handle wafers from 75 mm (3 in) to 300 mm (12 in) in size. The robots vary in size. The smallest robots handle loads of up to five pounds, moving vertically about 7 in. Larger robots have heavier bodies and move vertically from 10 in to 17 in.

The arm link length determines the reach; arm links are available in lengths from 4.25 in (107.95 mm) to 14.75 in (374.65 mm). For an arm length of 4.25 in per link, the total reach is 8.50 in plus end-effector length.

Flat Panel Display (FPD) robots are similar to the wafer-handling robots, but because the substrate is larger, the body must be heavy-duty. For example, the FPD 700 series of robots handle FPDs up to 700+ mm. An FPD-robot direct-drive axis on provides high-torque characteristics and eliminates transmissions or reductions, resulting in a true zero-backlash design. The electro-static discharge (ESD) tolerance is 21 kV.

Artisan Technology Group - Quality Instrumentation ... Guaranteed | (888) 88-SOURCE | www.artisantg.com

Top-Mount and Bottom-Mount Robots

Robots are available in both Atmospheric Top Mount (ATM) and Atmospheric Bottom Mount (ABM) configurations to accommodate various processing configurations. For example, a robot might be top mounted in a fixture or bottom mounted on a track.

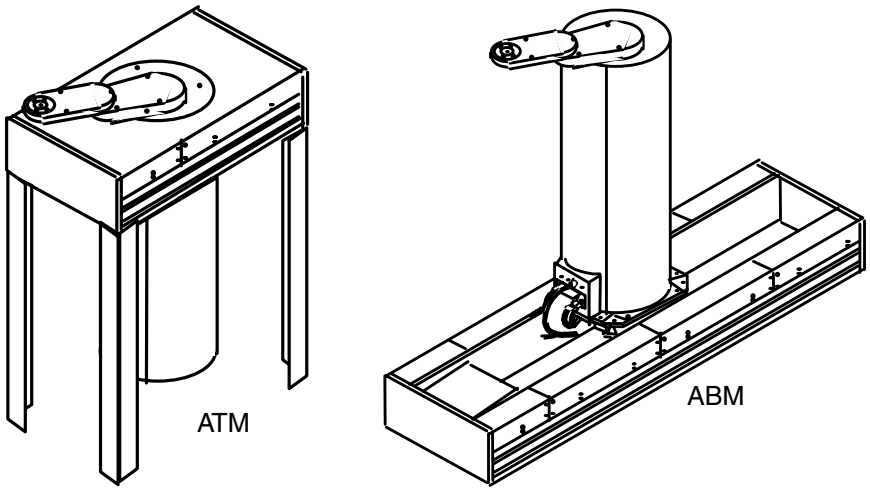

Figure 1-2: Atmospheric Top-Mount and Bottom -Mount Robots

WETBOTs

A WETBOT is an atmospheric top-mount robot with a chemical resistant finish. The covers on the arm links have O-ring seals and a seal is required where the top flange meets the mounting surface. Although many WETBOTs have a Flipper end effector, any end effector can be used.

The Series 100 WETBOTs use a harmonic drive for the theta axis. The speed and acceleration parameters for harmonic drives vary slightly from the speed and acceleration parameters for other gear systems, given the same body size and Z travel. Other than this, the WETBOT functions the same as other atmospheric robots.

Dual-Arm Robot

The Dual-Arm Bottom-Mounted Robot (DBM) is designed to handle wafers from 200 mm to 300 mm. Two end effectors are mounted on two arms with independent radial movement; the verticla and theta movement is shared. The DBM can be used in a fixed position or bottom mounted on a track system. Options include a laser scanner, but not a flipper or integrated pre-aligner.

Artisan Technology Group - Quality Instrumentation ... Guaranteed | (888) 88-SOURCE | www.artisantg.com

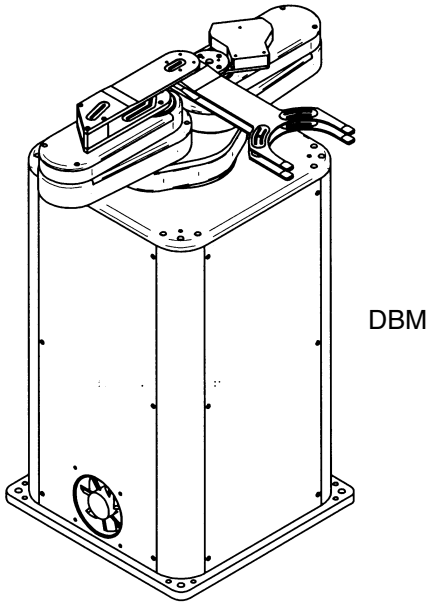

Figure 1-3: Atmospheric Dual Arm Robot

The DBM is intended for dry atmospheric conditions. The amplifier board is housed inside the robot, not in the controller. Macros that control robot functions are customized for each application.

Although the DBM is similar to the other atmospheric robots, it is documented in a separate manual, the *Atmospheric Dual-Arm Robot User's Manual*.

Robot Accessories

Robot accessories refer to attachments or options that can be removed or exchanged easily.

End Effectors

The two standard end effectors are the horseshoe end effector and the blade end effector.

A *dual* end effector has two surfaces for lifting wafers. The ends are directly opposite each other. Brooks Automation does not sell dual end effectors, but does provide the software for operating them. Each end effector is defined by a number and each taught station is assigned an end-effector number. That is, one end effector can be used by the robot to get a wafer from a cassette loading station while the other end effector is used to get a wafer from a processing station.

Artisan Technology Group - Quality Instrumentation ... Guaranteed | (888) 88-SOURCE | www.artisantg.com

Laser Scanner

The optional laser scanner is mounted on a robot arm to detect the presence of wafers in cassettes. The Smart Controller (ESC) sends information back to the host, indicating the presence, absence, or cross slotting in each wafer position. The macros use this information to provide automatic transfer of wafers.

The robot orients the laser scanner toward the wafer cassette and moves the Z axis to pass the laser vertically in front of each cassette slot. As the robot moves, the scanner emits laser pulses towards each cassette slot. A photodetector receives any laser reflections from any wafers in the cassette.

The amplified signal from the photodetector is digitized and passed to a digital signal processing (DSP) unit. The DSP internal memory stores the received signals and compares them with emitted laser pulses to generate an OUT signal. Using the OUT signal, the controller captures the position at which the laser hits a wafer. This is compared to the expected position of each slot to generate a wafer *map*.

Robot Systems

The basic robotic system is comprised of an Smart Controller (ESC) and a robot. Options include a pre-aligner, an optical scanner (or mapper), and a linear track. A cassette tilter is an option in an Integrated Front-End System. Details on these components are given in other Brooks Automation manuals; this section gives only a brief overview.

Brooks Automation Smart Controller

The Brooks Automation Smart Controller (ESC) controls the functions of the robot and other optional moving parts. The ESC provides servo control, power supplies, an optional user interface, and diagnostics for robots, pre-aligners, and track. The ESC and a host computer can communicate across an RS-232 line or the ESC can run stand-alone.

The ESC requires ac power. The ESC power cable and signal cables provide all power and control signals to the robot:

- The power cable provides 24 VDC for vacuum valves and PWM power for the servo motors.
- The signal cables provide the Galil motion controller board with encoder signals from the servo motors and vacuum solenoid, brake, or scanner commands to the robot, in addition to +5V and status indications.

For more information about the controller and printed circuit boards, refer to the *Smart Controller Hardware and Software User's Manual*.

Artisan Technology Group - Quality Instrumentation ... Guaranteed | (888) 88-SOURCE | www.artisantg.com

Wafer Pre-Aligner

Wafer pre-aligners use high-resolution optical sensing (11.0 microns) to align wafers of 3 in. to 12 in. (75 mm to 300 mm) without mechanical changes or readjustments. Sensing capabilities automatically align to the major flat or notch. Direct encoder feedback on the wafer chuck and a linear light source provide optimum illumination of the charged couple device (CCD) sensor.

A wafer pre-aligner can have three axes or only one axis. A three-axis pre-aligner can rotate the wafer (theta axis), move the wafer along a straight line (radial axis), and raise or lower the wafer (z axis). A one-axis pre-aligner can rotate the wafer only in the theta direction, requiring the robot to assist in reaching and retracting or raising and lowering the wafer.

Figure 1-4: Atmospheric Wafer Pre-Aligner

Linear Track

The Linear Track automatically moves the robot laterally between multiple stations that are positioned too far apart for a stationary robot. The Galil motion control boad controls the track as a single axis.

Figure 1-5: Robot Mounted to the Linear Track

Artisan Technology Group - Quality Instrumentation ... Guaranteed | (888) 88-SOURCE | www.artisantg.com

The track does not use the power supplies or amplifier boards in the ESC; it has an integrated power supply and amplifier motor driver. A track can be any length from 36 inches (457.2 mm) to 16 feet (4.88 mm) in 6-inch (152-mm) increments. See the *Linear Track User's Manual* for more information.

Integrated Front-End System

An Integrated Front End (IFE) is a self-contained wafer transfer system designed to attach directly to a process chamber or inspection tool. An IFE system typically houses a bottom-mounted robot, a pre-aligner, a linear track, pod handlers, HEPA filter blowers, and a controller in a frame enclosure.

A cassette tilter is an option in an IFE system. It has two purposes: to ensure that the wafers remain in position and to *tilt* the wafers to an angle the robot can reach. The tilter can move 90 degrees and is controlled from the host system.

User Interfaces

You can interface with the Smart Controller using a personal computer or a hand-held Teach Pendant. With a PC, you have the advantage of a full screen for editing macros or parameter files and the convenience of transferring files between ESC and PC. The small size of the Teach Pendant allows you to walk around the robot and observe closely as you command its movement.

Brooks Automation Terminal Emulation (EQT)

Brooks Automation Terminal Emulation (EQT) is a user interface for communicating with the ESC through your host computer or an external PC. EQT32 runs on Windows 95 and Windows NT. You can communicate from your PC with the ESC in three modes:

Terminal Mode: This is real-time, two-way communication. You can execute commands and macros, write or edit macros, check ESC status, upload files from the Controller and download files to the Controller.

Teach Mode: Like the Teach Pendant, you can teach and test robot and scanner positions. Icons and selection lists enable you to work with fewer keystrokes than on the Teach Pendant.

Diagnostic Mode: Use this mode for troubleshooting and diagnosing robot problems.

See the *Smart Controller Hardware and Software User's Manual* for complete information.

Artisan Technology Group - Quality Instrumentation ... Guaranteed | (888) 88-SOURCE | www.artisantg.com

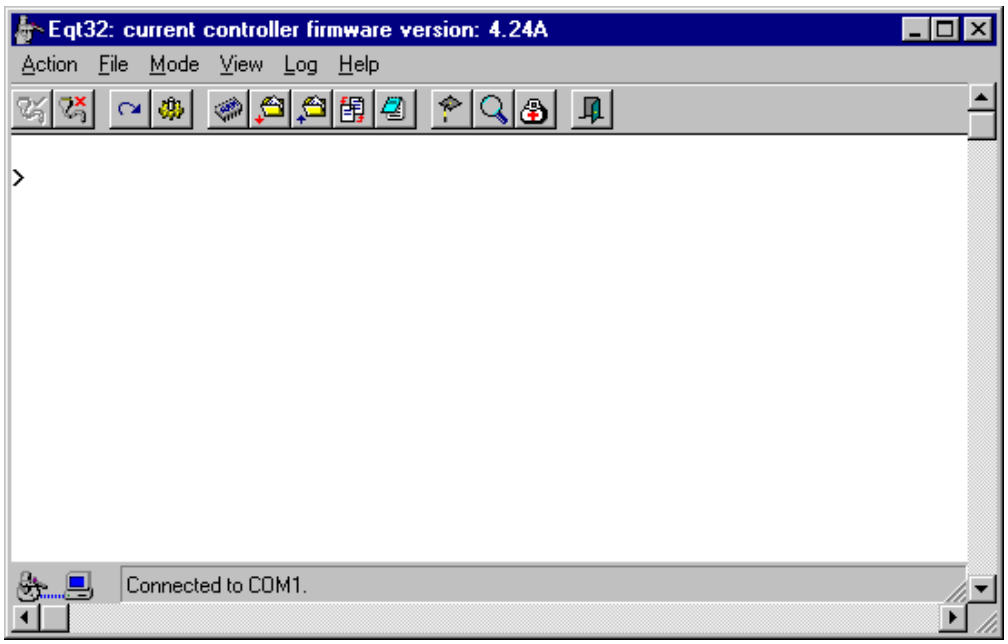

Figure 1-6: Terminal Emulation Window (EQT)

Teach Pendant

The Teach Pendant is a hand-held terminal used to execute commands and macros to the robotic system. The 4-line, 20-character, LCD screen displays the position of the robot, I/O status, limit switches, current station, speed indicator, and messages from the ESC. Each Teach Pendant key is printed with a graphic representation of its function.

For information about the Teach Pendant, refer to the *Smart Controller Hardware and Software User's Manual*.

Figure 1-7: Teach Pendant

Configuration

The configuration of the Atmospheric Single-Arm Robot is determined by the user and is based on the Basic Configuration needed and the System Integration Level required.

Artisan Technology Group - Quality Instrumentation ... Guaranteed | (888) 88-SOURCE | www.artisantg.com

Table 1-1: Robot Configuration Matrix

ATM/ABM Arm Link	**Z Stroke**	7.1"	10"	13.3"	17.3"	21.3"
4.5"		ATM-104 ABM-104	ATM-204 ABM-204		***ATM-304**	
5.25"		ATM-105 ABM-105	ATM-205 ABM-205	ATM-405 ABM-405	***ATM-305** ATM-505 ABM-505	ATM-605
7.2"		ATM-107 ABM-107	Not supported	ATM-407 ABM-407	***ATM-307**	
7.2b" (b=wide arm)		ATM-107b ABM-107b	Not supported	ATM-407b ABM-407b	***ATM-307b** ATM-507b ABM-507b	ATM-607b
9.1" (in development)						
			***Note! ATM-30X robots are no longer available.**			
			Recommended replacement is ATM/ABM-50X.			
FPD Robots Arm Link	**Z Stroke**				17.3"	21.3"
8.1"					FPD-408	
11"					FPD-411	FPD-511
14.75"						**FPD-515** 21.3" lead screw limited to 18" travel
VAC Robot Arm Link	**Z Stroke**	1.4"				
7.6"		VAC-407				
9.625" 9.8"		VAC-409 Chain 9.625" Band 9.8"				
OPTIONS		ATM=Atmospheric Top Mount ABM=Atmospheric Bottom Mount FPD=Flat Panel Display Atmospheric VAC=Vacuum Robot				
Single Vacuum		ATM-XXX-1				
Dual Vacuum		ATM-XXX-2				
Cassette Mapper/Scanner		ATM-XXX-x-S	Multiple options may be combined.(I.E. ABM-405-1-S-F) This is			
Flipper		ATM-XXX-x-F	an ABM-405 with one vaccuum line plus mapper and flipper.			
CE Mark		ATM-XXX-xx-CE				
Wet Process		ATM-XXX-xx-WET		Available with 7" or 10" Z travel		

Artisan Technology Group - Quality Instrumentation ... Guaranteed | (888) 88-SOURCE | www.artisantg.com

About This Manual

This manual is intended for Brooks Automation customers who have purchased an atmospheric single-arm robot, herein referred to simply as robot. This manual supports all firmware versions, version 6.00 and higher and code previous to 6.0. The information varies by firmware version for axis assignments, parameter files, and bit definitions for various status commands. Be sure you are using the axis assignments and parameter files intended for your level of firmware.

The robot is one component in a robotic system, which includes a Brooks Automation Smart Controller (ESC) and any of the following optional items: Pre-aligner, laser scanner, or track. In addition, the robotic system might include one or more customer components.

The example instructions in this manual, therefore, cannot be specific to a particular system. The intent of this manual is to document how the robot works. It does not document every possible device in a robotic system.

What's Not in This Book

This manual documents only the Atmospheric Single-Arm Robots. It does not document Vacuum Robots or the Atmospheric Dual-Arm Robots.

For specific information on each component in a robotic system, refer to the manual for that component:

- The *Smart Controller Hardware and Software User's Manual* for the 200 Series Smart Single Controller (ESC) and the 2000 Series Dual Controller (EDC) with the EQT 32 User Interface.
- The *Atmospheric Pre-Aligner User's Manual*.
- The *Atmospheric Dual-Arm Robot User's Manual*.
- The *Vacuum Robot User's Manual*.
- The *Integrated Front End User's Manual*.

NOTE: *All documents cited shall be the latest publication.*

This manual will refer the reader to these manuals for additional information.

Artisan Technology Group - Quality Instrumentation ... Guaranteed | (888) 88-SOURCE | www.artisantg.com

Note, Hazards, andPictograms

Notes and hazards used within this manual have very specific meanings and formats. A description of the meanings of these terms is provided below.

NOTE: *A note provides additional or explanatory information.*

A CAUTION indicates a potentially hazardous situation which, if not avoided, may result in minor or moderate injury. It may also be used to alert against unsafe practices.

A WARNING indicates a potentially hazardous situation which, if not avoided, could result in serious injury or death.

A DANGER indicates an imminently hazardous situation which, if not avoided, will result in serious injury or death.

Figure 1-8: Note, Caution, Warning, and Danger

Artisan Technology Group - Quality Instrumentation ... Guaranteed | (888) 88-SOURCE | www.artisantg.com

Specifications

The Brooks Automation Atmospheric Single-Arm Robot is a high reliability product. The specifications for the product and its subsystems are detailed below.

Robot Specifications

Repeatability:	3 sigma repeatability at +/- 25 microns
Wafer Sizes:	75mm (3 in) to 300 mm (12 in)
Contamination:	Cleanroom Class 1

Site Requirements for Moving the Atmospheric Single-Arm Robot

The smallest robot weighs about 35 pounds (15.88 kg) and the largest robot weighs about 85 pounds (38.56 kg). To lift a robot or a robot mounted on a track or frame, Brooks Automation recommends using the following lifting rings or a comparable load-rated substitute:

- Black Oxide coated Heat Treated Alloy steel ¼ -20 Hoist Ring made by American Drill Bushing Co. (P/N 23050). Four rings are required to lift a robot. Each ring is load rated for 550 pounds.
- 304-Stainless Steel ¼ -20 Hoist Ring made by American Drill Bushing Co. (P/N 23050-SS). Four hoist rings are required to lift a robot. Each ring is load rated for 275 pounds.

Either type ring can swivel 360 degrees and pivot 180 degrees. To attach the hoist rings and lifting device, follow the instructions in Chapter 3: Installation.

CAUTION

All drawings within this manual are generic and may not reflect specific builds of the Atmospheric Single-Arm Robot. To obtain a complete and current set of drawings and documents contact Brooks Customer Support.

Environmental Specifications

Temperature:

Artisan Technology Group - Quality Instrumentation ... Guaranteed | (888) 88-SOURCE | www.artisantg.com

Operating: 59° F to 89° F (15° C to 32.5° C)
Storage: -4° F to 104° F (-20° C to 40° C),

Humidity: 10% to 80% (relative, non-condensing)

Altitude: The product will operate in altitudes up to 1000 meters above sea level.

Ventilation Do not block the fan vents on the Atmospheric Single-Arm Robot or controller. Maintain at least 2 in (50.8mm) of free space between the fan vents and any obstruction or surface.

Center of Gravity

The center of gravity is fundamental in evaluating earthquake securement. To safely install the robot, use the weight and center of gravity as shown here. Center of gravity is on the X, Y, and Z axes. Weight tolerance is 5% and distance tolerance is 10 %.

Table 1-2: Center of Gravity Dimensions

Model	Arm Length	Weight	Distance
ATM 100	5 inches	27 pounds	9.25 inches
ATM 200	5 inches	29 pounds	10.50 inches
ATM 300	5 inches	54 pounds	17.50 inches
ATM 400	5 inches	56 pounds	13.50 inches
ATM 500	9 inches	60 pounds	18.25 inches
ABM 100	5 inches	27 pounds	9.00 inches
ABM 200	5 inches	29 pounds	10.25 inches
ABM 400	5 inches	56 pounds	13.25 inches
ABM 500	5 inches	60 pounds	18.00 inches
FPD 400	9 inches	60 pounds	18.50 inches
FPD 500	9 inches	65 pounds	18.50 inches

Artisan Technology Group - Quality Instrumentation ... Guaranteed | (888) 88-SOURCE | www.artisantg.com

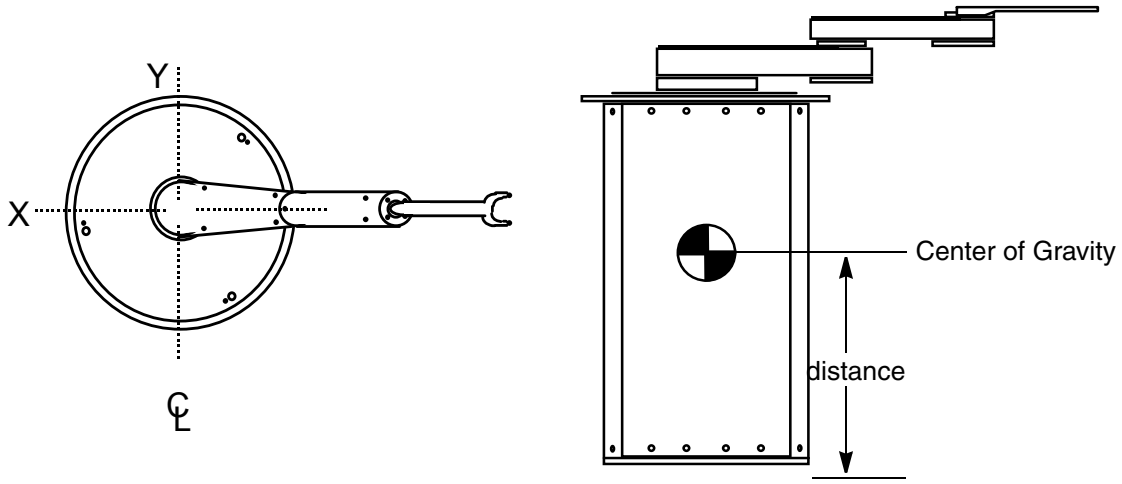

Figure 1-9: Atmospheric Single-Arm Robot Center of Gravity

Electrical Specifications

The following are the electrical specifications:

Operating Specifications	Tolerances
100/120 VAC @ 5 amps	Voltage: 92 VAC to 260 VAC
220/240 VAC @ 2.5 amps	Frequency: 47 Hz to 63 Hz

Power cords must comply with HD21 or HD 22 specifications. Refer to the chapter on Regulatory Compliance for more information.

For components used as main disconnect, the minimum overcurrent ratings are:

- All 208/120-volt circuit protection devices to be rated minimum 10,000 Ampere Interrupt Current (AIC).
- All 480/277-volt circuit protection devices to be rated minimum 14,000 AIC.

Exception: Overcurrent protection devices do not require these ratings if they are located on the load side of another overcurrent protection device with the proper AIC rating. This overcurrent protection device must be mounted close to the equipment.

Mechanical Specifications

Top mount robots typically mount through a hole in a base plate in the host equipment. This hole should be 0.5 in (12.5 mm) larger than the robot body diameter. Four user-supplied #1/4-20UNC or M6 cap screws secure the robot to the base plate. The

Artisan Technology Group - Quality Instrumentation ... Guaranteed | (888) 88-SOURCE | www.artisantg.com

plate should be at least 0.5 in (12.5 mm) thick if made from aluminum and 0.38 in (9.6 mm) thick if made from steel.

Bottom mount robots mount on a base plate in the host equipment. Four user-supplied #1/4-20UNC or M6 cap screws secure the robot to the base plate. The plate should be at least 0.5 in (12.5 mm) thick if made from aluminum and 0.38 in (9.6 mm) thick if made from steel.

Vacuum Specifications

The recommended vacuum source is 25-in. Hg at > 1 SCFM freeflow.

Seismic Specifications

The robot should be bolted firmly into the system where it is being used.

Artisan Technology Group - Quality Instrumentation ... Guaranteed | (888) 88-SOURCE | www.artisantg.com

This Page Intentionally Left Blank

Artisan Technology Group - Quality Instrumentation ... Guaranteed | (888) 88-SOURCE | www.artisantg.com

2 Safety

Overview

This chapter describes safety guidelines for the Brooks Automation Atmospheric Single-Arm Robot. All personnel involved in the operation or maintenance of the Atmospheric Single-Arm Robot should be familiar with the safety precautions outlined in this chapter.

NOTE: *This manual is not a controlled copy. Updates to this manual may be made as Technical Support Bulletins or as a new revision. To verify this manual is the current revision, call Brooks Automation Customer Support.*

Chapter Contents

Regulatory Compliance 2-2
Safety Considerations 2-3
Robot Safeguards 2-6
Emergency Stop (EMS/MOFF) 2-7
EMC and ESD Protection 2-9
Safety Labels 2-10
SEMI S2 Systems 2-13
Safety Interlocks 2-14
Mechanical Hazards 2-15
Electrical Hazards 2-17
Laser Hazards 2-20
Gas Hazards 2-21
Chemical Hazards 2-22
Thermal Hazards 2-23
Vacuum Hazards 2-24
Fire and Explosion Hazards 2-25
Environmental Hazards 2-26
Teach Pendant 2-27
Matrix of Emergency and Corrective Response Actions 2-29
Material Safety Information 2-30

Artisan Technology Group - Quality Instrumentation ... Guaranteed | (888) 88-SOURCE | www.artisantg.com

Regulatory Compliance

These safety recommendations are basic guidelines. If the facility where the Atmospheric Single-Arm Robot is installed has additional safety guidelines they should be followed as well, along with the applicable national and international safety codes.

To determine if the product is CE compliant, check for the CE mark on the product. If necessary, request the official Declaration of Conformity (DOC) from Brooks Automation. The product is also S2 compliant. If necessary, request a copy of the Third Party Certificate of Compliance (COC) from Brooks Automation.

In addition to this section, other sections may include regulatory information.

Note that the nickelcoated robots are CE and SEMI S2 compliant, but the black-anodized robots are not.

There are no ergonomic or human factor requirements for a robot.

Table 2-1: Safety Agencies

Approval of Safety Agencies	This equipment has been examined for user safety and complies with the regulations set by the following organizations:
CE (Conformité Européenne) - The European safety requirements	• Machinery Directive • LVD Directive • EMC Directive
Semiconductor Equipment and Materials International (SEMI)	Safety Guidelines for Semiconductor Manufacturing Equipment (the SEMI S2 and S13 Guidelines).
CDRH Chapter 21 CFR, Subsection J	Laser safety requirements applicable on its date of manufacture.

The robot is intended to be integrated into an end-user system. If the robot is used in a manner not specified by Brooks Automation, the protection provided by the robot assembly is compromised.

Artisan Technology Group - Quality Instrumentation ... Guaranteed | (888) 88-SOURCE | www.artisantg.com

Safety Considerations

Brooks Automation performs safety assessments for each product manufactured by Brooks. The safety issues generated during these assessments are discussed in this manual. The complete Safety Analysis is available by request.

WARNING

Only qualified personnel are permitted to transport, assemble, operate, or maintain the Atmospheric Single-Arm Robot. Properly qualified personnel are those who have received certified training and have the appropriate qualifications for their jobs.

Personnel Safety Guidelines

The Brooks Automation Atmospheric Single-Arm Robot may provide several direct safety hazards to personnel if not properly installed or operated.

- Persons operating the product should be properly trained.
- Possible injury can result from the automatic operation of the product.
- Know the location of the following:
  - Fire extinguisher
  - First Aid Station
  - Emergency eyewash and/or shower
  - Emergency exit
- Be aware of sharp edges while working around the product.
- The following safety equipment should be donned prior to operating or servicing the product:
  - Eye protection
  - Hard hat
  - Safety Shoes
- Observe the facility guidelines pertaining to loose clothing while working around or operating the Atmospheric Single-Arm Robot.
- Perform a complete review of the Material Safety Data Sheets (MSDS) for each material used with the product. These individual sheets are provided by the suppliers of the materials.
- It may be recommended that the use of hazardous materials, such as cleaning

Artisan Technology Group - Quality Instrumentation ... Guaranteed | (888) 88-SOURCE | www.artisantg.com

fluids, be used during routine maintenance procedures. Perform a complete review of the Safety Information Sheet provided at the end of this chapter for each recommended substance.

Equipment Safety Guidelines

The product user is accountable for the following safety concepts:

- If hazardous materials are to be present, users must take responsibility to observe the proper safety precautions and insure that the material used is compatible with those from which the product is fabricated.
- User's are responsible for the detection of unwanted chemical or gaseous releases.
- It is the user's duty to provide secondary containment for the product (i.e., spill pans under oil reservoirs) at their discretion.
- The user shall determine if the product will be employed in an earthquake prone environment and rectify equipment installation accordingly.

CAUTION

The product is not provided with an Emergency Machine Off (EMO) device. The user is accountable for the EMO circuit.

The following safety considerations are provided to aid in the placement and use of the Atmospheric Single-Arm Robot.

TRIP HAZARD

- Do not place the product's facilities connections (power and communications cables, gas and vacuum lines) where they could cause a safety hazard.
- Do not place the product in a location where it may be subject to physical damage.
- Ensure that all power connections to the product are properly grounded.
- Ensure that the product receives proper air flow for cooling.
- Do not remove any Warning, Hazard, or Equipment Identification labels.
- Turn OFF power before inserting or removing power cables.

Artisan Technology Group - Quality Instrumentation ... Guaranteed | (888) 88-SOURCE | www.artisantg.com

- Be aware of the hazardous points of the Atmospheric Single-Arm Robot as described in this section.

CAUTION

Use of the Atmospheric Single-Arm Robot for any purpose other than as a robot is not recommended and may cause damage to the product or the equipment it is connected to.

Some moving mechanisms have no obstruction sensors and can cause personal injury.

Whenever power is applied, the possibility of automatic movement of the components within the Atmospheric Single-Arm Robot exists, which could result in personal injury.

Artisan Technology Group - Quality Instrumentation ... Guaranteed | (888) 88-SOURCE | www.artisantg.com

Robot Safeguards

The robot has the following safety features:

- In case of electrical power failure, each axis stops in whatever position it is in at the time of failure.
- If the encoder signal cable is disconnected while the power is on, the amplifier is disabled.
- If the robot hits an object, the system stops. That is, when the *following error* is greater than the configured limit, the controller disables the axis. The following error is a robot parameter that limits the difference in encoder counts between the actual position and the expected position.

For the safety of the operating personnel, Brooks Automation requires that robotic systems are enclosed behind safety doors and interlocks. In addition, the safety training of personnel required by ANSI/RIA R15.06 should be followed.

The robot system safety enclosure is sized to encircle the furthest extension of the robot arm as shown in Figure 2-1.

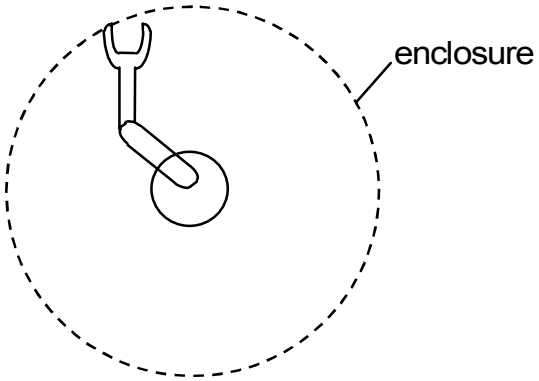

Figure 2-1: Robot System Safety Enclosure

No person shall be allowed within the enclosure during testing and startup.

Brooks Automation recommends that you activate the robot from outside the restricted envelope. This can be done in one of these ways:

- Configure the equipment so that the robot-control panel or any actuating controls are outside the restricted envelope.
- Build an enclosure for the robot and locate all controls outside this enclosure.

Artisan Technology Group - Quality Instrumentation ... Guaranteed | (888) 88-SOURCE | www.artisantg.com

Emergency Stop (EMS/MOFF)

The Brooks Automation robot control system has an emergency stop circuit. The emergency stop circuit, when activated, overrides all other controls, removes power to the motor amplifiers, and causes all motion to stop. Brooks Automation does not provide a robot stop on the system, but a TTR-200 Teach Pendant has an EMERGENCY STOP button. (See page 26 for information on the Teach Pendant.)

Emergency Stop (EMS) or Motor Off (MOFF) is hardware-activated. STOP is an optional feature and is software-activated. The inputs are on the I/O Board located in the controller:

- EMS or MOFF. If the EMS/MOFF input on the I/O board is activated, the dc power to the amplifiers is cut off, which turns off the servo motors.

  To recover from EMS/MOFF, inspect the system for any damage or interfering components, pull out the STOP button, start up the system, turn on servo motors for all axes (SVON).

  To enable EMS/MOFF, activate pin 20 (+) and pin 3 (-) on the DB37 connector with 24 volts dc (SEMI S2 systems) or 5/24 volts dc (non-SEMI S2 systems) wired normally closed, as shown in the Emergency Stop Circuit and Interconnect diagram.

  For more details, refer to Chapter 12: Drawings. To custom configure other than the default settings, contact your Brooks Automation representative.

- STOP (software). If the STOP input on the I/O board is activated, the software immediately decelerates all axes and all motion is stopped.

  To enable STOP, activate pin 20 (+) and pin 21 (-) on the DB37 connector with 24 volts dc (SEMI S2 systems) or 5/24 volts dc (non-SEMI S2 systems) wired normally closed, as shown on the Emergency Stop Circuit and Interconnect diagram.

Artisan Technology Group - Quality Instrumentation ... Guaranteed | (888) 88-SOURCE | www.artisantg.com

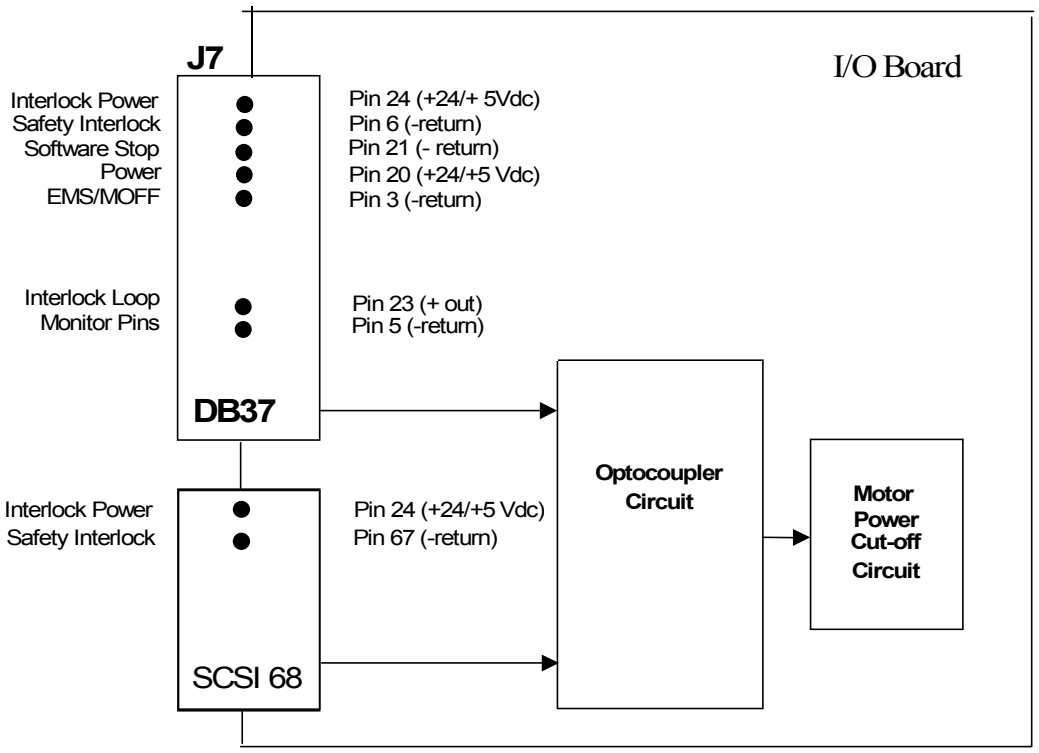

Figure 2-2: Emergency Stop Circuit and Interconnect Diagram

Artisan Technology Group - Quality Instrumentation ... Guaranteed | (888) 88-SOURCE | www.artisantg.com

EMC and ESD Protection

A third party has tested the product to ensure electromagnetic compatibility for both emissions and immunity. The product complies with the EMC Directive.

For protection against Electromagnetic Interference (EMI), it is strongly recommended that you place the Brooks Automation Smart Controller (ESC) as close to the root as possible.

ESD/EMI Precautions

Protection against electrostatic discharge (ESD) is designed into the robot. The robot can withstand ESD up to 15 kV, which is higher than current EMC requirements. If you attach a Teach Pendant, the system is more susceptible to ESD and EMI problems. Instructions for grounding the TTR-100 and TTR-200 to eliminate ESD related problems are given in instructions for connecting the Teach Pendant on xx

For robot

The product complies with the EMC directives and can withstand up to 15 kV ESD.

Artisan Technology Group - Quality Instrumentation ... Guaranteed | (888) 88-SOURCE | www.artisantg.com

Safety Labels

Hazards to personnel include electric shock, burns, collision with a moving robot, and laser radiation.

Damage to equipment may result from faulty installation, improper operation, inadequate or incorrect maintenance, and other forms of misuse or abuse.

CAUTION

Ignoring information about potential hazards can lead to serious harm to personnel and/or damage to equipment, and may result in the nullification of the manufacturer's equipment warranty.

Laser Warning Labels

Laser warning labels are affixed to the laser scanner as shipped from the laser manufacturer, as shown here.

Class 1
Laser Product

However, when the laser scanners are integrated into systems in conjunction with hardware interlocks, the laser operates in the Class 1 mode. Systems provides additional labels.

The laser scanner should not be serviced in the field. Customers who remove the laser scanners from the robot should not attempt to troubleshoot or repair them. Instead, return them to Brooks Automation for service.

Artisan Technology Group - Quality Instrumentation ... Guaranteed | (888) 88-SOURCE | www.artisantg.com

High Voltage Label

The high voltage-warning label is attached to the controller.

Pinch Point Label for SEMI S2 Systems

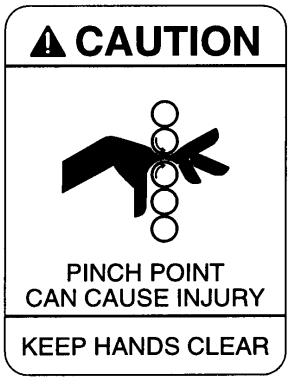

The pinch point label is attached to the top of the robot body. Possible pinch points are located near any moving arm extension or the Z axis. It is hazardous to put your hand in the space at either end of the robot.

Fuse Label

The fuse safety label is attached adjacent to the power supply input on the controller.

Caution - Risk of Fire T

Replace with R5A 250V Fuse

Artisan Technology Group - Quality Instrumentation ... Guaranteed | (888) 88-SOURCE | www.artisantg.com

Underwriter Lab Label

The Underwriter Lab label is attached to the side panel of the power supply input on the controller.

Manufacturing Labels

The controller manufacturing label lists the power rating. It is located adjacent to the power supply input on the controller.

The robot manufacturing label is located on the left front of the robot.

Artisan Technology Group - Quality Instrumentation ... Guaranteed | (888) 88-SOURCE | www.artisantg.com

SEMI S2 Systems

The robot has no user serviceable parts and maintenance is minimal. When maintenance occurs, the equipment is fully de-energized, which results in a Type 1 task hazard rating.

OEM Systems recommends the use of presence-sensing safeguards to stop the automatic operation of the robot. When an object is sensed, the hazardous motion within the restricted envelope is stopped immediately and any automatic operation is stopped. That is, the failure of a single component does not prevent the normal stopping action of the robot, but does prevent robot automatic operation until the component failure is corrected.

OEM Systems does not provide an enclosure or barrier for the robot, but the amount of force for each robot axis is enough to require the use of an enclosure or barrier as protection. An enclosure/barrier prevents people from reaching the restricted envelope. If access is required through the enclosure-barrier into the restricted envelope, it should be through an interlocked access. If it is necessary to bypass the interlock, OEM Systems recommends that the interlock is automatically restored when the enclosure is again closed.

OEM Systems strongly recommends an enclosure/barrier that is hardware interlocked. The purpose of the interlock is to ensure that any single component failure does not prevent the normal stopping action of the robot, and does prevent automatic operation until the component failure has been corrected. Opening the interlock circuit should either stop the robot and remove drive power to the robot actuators or stop automatic operation of the robot and any associated equipment.

To restore automatic operation, the user must exit the restricted envelope, restore the safeguards required for automatic operation, and initiate a deliberate start-up procedure.

Artisan Technology Group - Quality Instrumentation ... Guaranteed | (888) 88-SOURCE | www.artisantg.com

Safety Interlocks

Hardware activated fail safe interlock circuits are provided for SEMI S2 systems. These interlock circuits come with an Interlock Loop monitor circuit to give the user software activated feedback status. The inputs are located on the Version 3 I/O Board located in the controller. If the safety interlock is activated, the dc power to the amplifiers is cut off, which turns off the servo motors.

To recover from an interlock stop condition, inspect the system for any damage, interfering components, or open panels. Check and reset the individual interlocks. Start up the system and turn on servo motors on all axes (SVON).

To enable the interlock circuit, activate pin 24 (+) and pin 6 (-) on the DB37 connector or pin 34 (+) and pin 67 (-) on the SCSI 68 connector wired normally closed. To allow for multiple interlock switches, all switches should be wired in series (normally closed). An open in any of these switches will disconnect power to the laser scanner and all motors.

The interlock loop monitor, pin 23 (+ out) and pin 5 (- return) on the DB37 connector allows for monitoring the interlock status directly, bypassing controller software. If the bit goes low at any time, it indicates that an interlock has been opened. This allows the host computer to receive a warning directly and could also be used to generate an interrupt routine to recover from the interlock condition.

For more details, refer to . To custom configure other than the default settings, contact your Brooks Automation representative.

Artisan Technology Group - Quality Instrumentation ... Guaranteed | (888) 88-SOURCE | www.artisantg.com

Mechanical Hazards

The Brooks Automation Atmospheric Single-Arm Robot is a complex electromechanical device. *Only persons with the proper training should service or operate the product.*

All facilities to the product must be disconnected as outlined in the facilities' lockout/tagout procedure before servicing, or injury may result from the automatic operation of the equipment. The proper precautions for operating and servicing remotely controlled electro-mechanical equipment must be observed. These precautions include wearing safety glasses, steel toe shoes, and any other precautions specified within the facility where the product is being used.

DANGER

Moving mechanisms have no obstruction sensors. Do not operate the product without the protective covers in place or personal injury could result in the squeezing or compression of fingers or hands between moving parts. If the Interlocks are disabled the possibility of automatic movement of systems within the Atmospheric Single-Arm Robot exists.

WARNING

When servicing the Atmospheric Single-Arm Robot, ensure that all equipment connected to it is also shut down using lockout/tagout to prevent automatic movement within that equipment.

HEAVY LIFTING

Ergonomic Hazard - Failure to take the proper precautions before moving the Atmospheric Single-Arm Robot could result in personal injury.

Artisan Technology Group - Quality Instrumentation ... Guaranteed | (888) 88-SOURCE | www.artisantg.com

TIP HAZARD

Tip hazard exists when moving the Atmospheric Single-Arm Robot or when it is not attached to the user's process tool.

TRIP HAZARD

Trip hazard exists if the facilities connections (power and communications cables, gas and vacuum lines) for the Atmospheric Single-Arm Robot are not routed to ensure they don't cause a safety hazard.

Artisan Technology Group - Quality Instrumentation ... Guaranteed | (888) 88-SOURCE | www.artisantg.com

Electrical Hazards

The proper precautions for operating and servicing electrical equipment must be observed. These precautions include following facility lockout/tagout procedures, and any other specified action within the facility where the product is being used.

HIGH VOLTAGE

Electrical Hazard: Turn off power before servicing.

Improper electrical connection or connection to an improper electrical supply can result in electrical shock or burns resulting in serious injury or death or cause an equipment fire and damage to the equipment. Always provide the product with the proper electrical code compliant connections.

Lockout/Tagout

Brooks Automation recommends that you use a Lockout/Tagout method to prevent anyone from reconnecting power without assistance from service personnel.

The robotic system is not intended to be a stand-alone unit. Brooks Automation recommends that the robot be installed only in a host system with lockout/tagout provisions. That is, each installation requires a device to shut off power to the robot that is located outside the restricted envelope and has a lockout/tagout capability.

The end user must comply with OSHA 29 CFR 1910.147 (Control of Hazardous Energies, Lockout/Tagout) and 29 CFR 1910.331-335 (Electrical Safety-Related Work Practices) as related to lockout/tagout.

WARNING

All power to the product must be disconnected per the facilities' lockout/tagout procedure. Potentially hazardous conditions or actions may exist that may result in personal injury.

The following are general recommendations for LOCKOUT or TAGOUT for systems manufactured by Brooks Automation.

- Use LOCKOUT/TAGOUT for high voltage electrical circuit repair.

Artisan Technology Group - Quality Instrumentation ... Guaranteed | (888) 88-SOURCE | www.artisantg.com

- Use TAGOUT for low voltage (below 30 volts) electrical circuit repair.

Tagout

When using tagout procedures, a written warning is attached to the switches/ circuit breakers that are placed in a SAFE or OFF position. The SAME person shall remove the tag once the work has been completed. Tags and their attachments shall be substantial enough to avoid accidental removal. The tag and attachment shall be non-reusable, self-locking, non-releasable and attached by hand. A nylon cable tie is recommended.

Tagout Procedure

1. Notify all affected personnel that a tagout is required.

2. Set the system circuit breaker to the down (off) position.

3. Place a warning tag on the circuit breaker handle bar.
   The tag must have the following information:

   Date of maintenance / service action
   Names of the persons performing the service procedure
   Short description of the service / maintenance action
   Signatures of the service supervisor and production supervisor

4. Using a voltmeter, electrically verify that the associated circuitry is de-energized.

Lockout

When using lockout procedures, a lock is attached to switches/circuit breakers to keep equipment from being set in motion and endangering service personnel. One key is to be provided for each lock and must be kept by the person doing the work.

Lockout Procedure

Perform Tagout procedure above, but also disconnect AC to the End Tool and lockout per local Lockout procedures.

Electrical Hazard Classifications

The following table describes the four types of electrical hazard classifications as per SEMI S2-0200. Brooks Automation has designed the product to require minimum

Artisan Technology Group - Quality Instrumentation ... Guaranteed | (888) 88-SOURCE | www.artisantg.com

need to conduct testing or maintenance on subsystems that may be energized. Calibrations and adjustments are performed with the power on and live circuits covered. **No equipment should ever be repaired or replaced with the power on.**

Table 2-2: Electrical Hazard Classifications

Classification	Description
Type 1	Equipment if fully de-energized.
Type 2	Equipment is energized. Energized circuits are covered or insulated.
Type 3	Equipment is energized. Energized circuits are exposed and inadvertent contact with uninsulated energized parts is possible. Potential exposures are no greater than 30 volts RMS, 42.2 volts peak; 60 volts DC or 240 volt-amps in dry locations.
Type 4	Equipment is energized. Energized circuits are exposed and inadvertent contact with uninsulated energized parts is possible. Potential exposures are greater than 30 volts RMS, 42.4 volts peak, 60 volts DC, or 240 volt-amps in dry locations.

Artisan Technology Group - Quality Instrumentation ... Guaranteed | (888) 88-SOURCE | www.artisantg.com

Laser Hazards

Brooks Automation robots with or without laser scanners are sold solely as a component intended for incorporation into another product. The laser scanner is used to detect the presence of wafers and whether or not they are cross-slotted.

When approved Laser Scanning devices are installed as an option, the Brooks Automation Robotic Systems are CLASS 1 Laser Products, in accordance with CDRH Performance Standard 21 CFR Chapter 1, Sub-Chapter J.

Although Class 1 lasers do not pose a hazard, avoid staring into the laser beam or direct exposure to the laser beam. Two warning labels are affixed to the laser scanner.

End users reselling equipment containing laser devices must submit their own CDRH filing, Laser Product Report, to comply with 21 CFR Chapter 1, Sub-chapter J.

WARNING

Avoid exposure to potential laser hazards. Do not look directly at or into the laser beam (no matter what class of laser), follow any posted laser warnings or labels, and do not attempt to service, repair, or remove the protective housing of the laser device.

The following describes the laser Class I classification, general safety issues and laser handling precautions. Laser diodes have three properties that distinguish them from standard light emitting diodes. First, they can produce much brighter beams of light (by a factor of 1000 or more). Second, the beam from a laser can be very narrow (where the spot of light is almost the same size whether projected a few inches or many feet). Third, laser light is a very pure color with a single wavelength, which makes the spot look speckled and shimmery.

National and international standards classify low power laser systems as the following:

Class I: Very low power (<CW: 0.4µWatts at visible wavelengths) -- does not emit laser radiation at known hazard levels (eye damage occurs at 1µW).

Artisan Technology Group - Quality Instrumentation ... Guaranteed | (888) 88-SOURCE | www.artisantg.com

Gas Hazards

DANGER

Harmful gases may reside in the system the product is installed in. Under certain circumstances, some gases can leave a flammable or poisonous residue, refer to the Facilities' Material Safety Data Sheets (MSDS) for these gases and follow the facilities' standard precautions prior to performing any routine maintenance.

It may be recommended that Nitrogen gas be used for cleaning sections of the product assembly by "blowing out" any accumulated particles during routine maintenance procedures.

DANGER

Exposure to Nitrogen gas may cause dizziness or suffocation.

When handling compressed gases such as Nitrogen, eye protection should be worn. Any other precautions specified for compressed gases within the facility where the product is being used should be followed. Whenever any compressed gas is used during service of the product, the facilities' standard precautions for use of that gas must be employed.

Artisan Technology Group - Quality Instrumentation ... Guaranteed | (888) 88-SOURCE | www.artisantg.com

Chemical Hazards

The Brooks Automation Atmospheric Single-Arm Robot does not make use of any hazardous chemicals. However, it may be recommended that Isopropyl alcohol be used for cleaning sections of the product during routine maintenance procedures.

WARNING

Some chemicals may leave a flammable or toxic residue.

When a chemical is used during servicing the product, the standard precautions for use of that chemical must be observed. These safeguards include sufficient ventilation, proper disposal of excess chemical and wipes and any other precautions specified for use of hazardous chemicals within the facility where the product is being used.

WARNING

Whenever any cleaning fluid is used during service of the product, the facilities' environmental procedures must be followed regarding the storage, handling, and disposal of that fluid along with any affected apparatus.

Artisan Technology Group - Quality Instrumentation ... Guaranteed | (888) 88-SOURCE | www.artisantg.com

Thermal Hazards

The Atmospheric Single-Arm Robot does not use thermal heat during operation. However, heating may occur in the robot or in one of the attached components. Be aware of these areas during servicing of the robot.

WARNING

Allow the system chamber and robot to completely cool before performing maintenance involving volatile chemicals.

Artisan Technology Group - Quality Instrumentation ... Guaranteed | (888) 88-SOURCE | www.artisantg.com

Vacuum Hazards

The Brooks Automation Atmospheric Single-Arm Robot uses vacuum to hold the wafer on the end effector.

WARNING

Whenever any vacuum pump exhaust is vented, the facilities' environmental procedures must be followed regarding the venting of gases.

Artisan Technology Group - Quality Instrumentation ... Guaranteed | (888) 88-SOURCE | www.artisantg.com

Fire and Explosion Hazards

The Brooks Automation Atmospheric Single-Arm Robot provides no direct fire or explosion hazard. However, the use of Isopropyl alcohol or other flammable solvents around the product while power is applied does present the possibility of fire or explosion. Cleaning fluids may leave a flammable residue. If they are being used during servicing of the product, the proper precautions for use of those fluids must be observed.

WARNING

Never use isopropyl alcohol to clean hot parts due to the risk of fire or explosion. Allow the product to completely cool before performing maintenance involving flammable cleaning fluids.

CAUTION

Whenever any cleaning fluid is used during service of the product, all power to the product should be disconnected and the standard precautions for use of that fluid must be employed.

Artisan Technology Group - Quality Instrumentation ... Guaranteed | (888) 88-SOURCE | www.artisantg.com

Environmental Hazards

Noise

The Brooks Automation Atmospheric Single-Arm Robot provides no direct noise hazard. .

Vibration

The Brooks Automation Atmospheric Single-Arm Robot provides no direct vibration hazard. Any vibrations produced are minimal and cause no hazardous conditions.

Artisan Technology Group - Quality Instrumentation ... Guaranteed | (888) 88-SOURCE | www.artisantg.com

Teach Pendant

OEM Systems recommends the exclusive use of the SEMI S2 compliant Teach Pendant, the TTR 200. The TTR 200 has a red EMERGENCY STOP button and two black "dead-man" buttons.

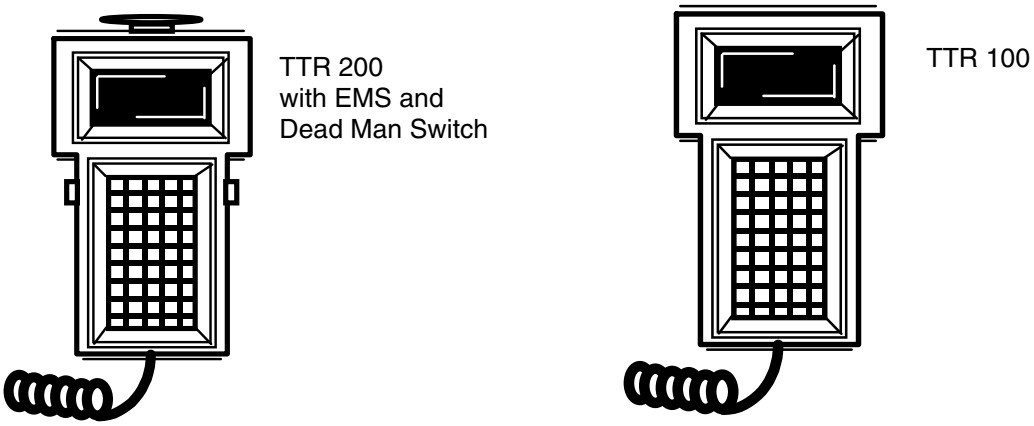

Figure 2-3: Teach Pendants Models TTR 200 and TTR 100

The Teach Pendant does not support Attended Continuous Operation as defined in ANSI/RIA R15.06. It does provide Slow Speed Control for Teach mode. While in Teach (Attended Program Verification) mode, you can reset the robot speed, but it cannot exceed 10 inches per second. (All arms result in less than 10 ips except the 14.75 arm, which does not exceed 13 ips.

For information on converting the TTR 200 DB15 connector to an RJ12 connector, refer to Chapter 12: *Drawings*

Using the EMERGENCY STOP

When the user sees or suspects a hazardous motion, the user presses the red Emergency Stop button. All movement in the robotic system is stopped. To recover, inspect the system for any damage or interfering components, pull up the Emergency Stop button, start up the system, turn on servo motors for all axes (SVON), and home all axes.

Using the Dead-Man Switch

OEM Systems recommends that there is only one control of robot movement at any given time. When you use the TTR 200, commands that initiate robot movement work

Artisan Technology Group - Quality Instrumentation ... Guaranteed | (888) 88-SOURCE | www.artisantg.com

only when you hold down one or both black dead-man switch buttons. The dead-man switch or momentary switch, is a normally open spring-loaded switch.

If the Teach Pendant is plugged into the recommended Teach Pendant isolation circuit and you lock out the host computer by selecting Teach mode and entering `CTRL+D` or `CTRL+T` *before holding down the dead-man switches,* the host computer cannot take control from the Teach Pendant. Refer to Chapter 12: *Drawings* for schematics of the Teach Pendant connections.

When the Teach Pendant is in Teach mode, only the teacher is allowed in the restricted envelope and has sole control of any hazardous movement.

Artisan Technology Group - Quality Instrumentation ... Guaranteed | (888) 88-SOURCE | www.artisantg.com

Matrix of Emergency and Corrective Response Actions

The following matrix provides emergency and corrective actions for safety issues that may arise regarding the Atmospheric Single-Arm Robot only. Emergency and corrective actions required for the equipment the product is installed in should be provided with that equipment.

Table 2-3: Emergency Action Matrix

Emergency	Corrective Response
Electric Shock	Disconnect from power source.
Fire	Use a non-conductive fire extinguisher (Class C).
Mechanical Pinch	Perform one of the following: • Press EMO button (user accountable circuit) • Issue a HALT command • Turn off power from source • Press Emergency Stop button on CDM Then either free the pinched object or physically push the arms in reverse direction to free the pinched object.
Gas Leak	Turn off and disconnect gas from the Atmospheric Single-Arm Robot

Artisan Technology Group - Quality Instrumentation ... Guaranteed | (888) 88-SOURCE | www.artisantg.com

Material Safety Information

Hazardous materials may be present during the operation of the product or during maintenance.

Hazardous material distributors provide a Material Safety Data Sheet (MSDS) for all materials they supply. These sheets provide crucial information pertaining to the hazardous material used in the equipment.

The facility where the product is to be used is responsible for the maintenance and distribution of each MSDS. Ensure that there is a copy in each workplace for all hazardous materials involved.

The following hazardous materials may be recommended for use with the product. The following material safety information is provided as a guideline for proper conduct when working with hazardous materials and corrective action if exposed to them. Brooks recommends that MSDS sheets for these materials be obtained from the materials' supplier.

Table 2-4: Material Safety Information

Material	MSDS Title	Page No.
Isopropyl alcohol	Isopropyl alcohol	2-31
Lubricants	"C" Grease KURODA Precision Industries LTD "C" grease is used in some Atmospheric Single-Arm Robots in the 100 series.	2-32
	LG 2 Grease SHOWA SHELL SEKIYU KABUSHIKI KAISKA Lubricating Grease (LG) 2 is used in some Atmospheric Single-Arm Robots in the 100 series and all Atmospheric Single-Arm Robots in the 200, 300, 400, and 500 series.	2-34
	Braycote 803 Ted Pella, Inc Vacuum grease, Braycote 803 is used to lubricate the lead screw in some Atmospheric Single-Arm Robots.	2-36

Artisan Technology Group - Quality Instrumentation ... Guaranteed | (888) 88-SOURCE | www.artisantg.com

Isopropyl Alcohol Safety Information

Isopropyl Alcohol (IPA) is a clear, colorless, mobile flammable liquid with the chemical formula C_3H_7OH. Short term exposure to IPA is irritating to skin, eyes, and mucous membranes. Long term exposure may cause drying, cracking, or burning of the skin. A person working with IPA must be thoroughly familiar with MSDS precautions and corrective action to take in the event of exposure.

Preexisting medical conditions may be aggravated by IPA. Isopropyl alcohol should not be used with aluminum equipment at temperatures above 120° F. Isopropyl Alcohol is incompatible with strong oxidizing agents, acids, chlorine, acetaldehyde, ethylene, and isocyanates. IPA decomposes into hazardous carbon monoxide and carbon dioxide.

Hazard	Emergency Action
Fire	• Flammable/combustible material; may be ignited by heat, sparks, or flames. • Vapors may travel to a source of ignition and flash back. • Container may explode in heat of fire. • Fire may produce irritating or poisonous gases. • Small fires may be put out with a CO_2 or dry chemical type extinguisher. • Large fires may be extinguished with water spray, fog, or foam. • Move the container from fire area if this can be performed without risk.
Leak	• Shut off ignition sources. No flames or smoking in hazard area. • Stop leak if possible. • For small spills, take up with sand or other noncombustible absorbent material and dispose of properly.
Inhalation	• May be poisonous if inhaled. • Vapors may cause dizziness or suffocation. • Move victim to fresh air and call emergency medical care. If victim is not breathing perform artificial respiration.
Skin Contact	• May be poisonous if absorbed through the skin. • Contact may irritate or burn skin and eyes. • In case of contact with eyes, flush eyes with running water for at least 15 minutes. • In case of contact with skin, wash skin with soap and water. Remove and isolate clothing and shoes at the site.

Artisan Technology Group - Quality Instrumentation ... Guaranteed | (888) 88-SOURCE | www.artisantg.com

MSDSs for C Grease

IDENTITY: "C" Grease			
Section I			
Manufacturer's Name KURODA Precision Industries LTD.		Emergency Telephone Number 044-555-3805	
Address 239 Shimohirama, Saiwai-ku, Kawasaki, Kana-gawa, Japan		Date Prepared April 18, 1996	
Telephone Number for Information 044-555-3805		Signature of Preparer S. Tamai	
Section II Hazardous Ingredients / Identity Information			
Hydrocarbon Type Synthetic Oil			70-78%
Urea Derivaives			20-24%
Rust Inhibitor (Naphthenate, Succinic Acid Derivaives)			1 - 3%
Anti-Oxidant (Organic Amine)			1 - 3%
Note: All Components were confirmed to have been in the TSCA inventory.			
Section III Physical/Chemical Characteristics			
Boiling Point	N/A	Specific Gravity	0.89
Vapor Pressure	N/A	Melting Point Dropping Point °C	260<
Vapor Density	N/A	Evaporation Rate (Butyl Acetate = 1)	Slower
Solubility in Water: Negligible			
Appearance and Odor: White paste, slight odor			
Section IV Fire and Explosion Hazard Data			
Flash Point (Method Used) 220° C (Seta Flash Method)		FLAMMABLE LIMITS, LEL or DEL NA	
Extinguishing Media Dry chemical, Foam, CO_2			
Special Fire-Fighting Procedures Wear self-contained breathing apparatus with full face piece. Water stream may spread fire, use spray only to cool containers exposed to fire.			
Unusual Fire and Explosion Hazards None			
Section V Reactivity Data			
Stability	Unstable		Conditions to Avoid None Known
	Stable	X	
Incompatibility (Materials to Avoid) None known			
Hazardous Decomposition of Byproducts Thermal decomposition or combustion may produce carbon monoxide and/or carbon dioxide.			
Hazardous Polymerization	May occur		Conditions to Avoid: None
	Will not occur	X	
Section VI Health Hazard Data			

Artisan Technology Group - Quality Instrumentation ... Guaranteed | (888) 88-SOURCE | www.artisantg.com

IDENTITY: "C" Grease		
Route(s) of Entry	INHALATION? NA SKIN? Applicable INGESTION? Applicable	
Health Hazards (Acute and Chronic)	Acute: None Known.	
	Chronic: None Known. May cause mild irritation to skin and eyes.	
Carcinogenicity	NTP? None IARC Monongraphs? None OSHA Regulated? None	
Signs and Symptoms of Exposure This product is not a primary skin irritant; however, skin irritation may occur if used improperly.		
Medical Conditions Generally Aggravated by Exposure May aggravate existing skin irritation where further defatting of skin penetration could occur.		
Emergency and First Aid Procedures	EYES: Flush with clean water for at least 15 minutes.	
	INGESTION: Consult a physician.	
	SKIN: Remove product by wiping followed by washing with soap and water.	
Section VII Precautions for Safe Handling and Use		
Steps to be Taken in Case Material Is Released or Spilled Sweeping and shoveling will recover bulk material. Trace may be removed by repeated washing with a solvent disposed.		
Waste Disposal Method Incinerate in accordance with applicable regulation. Material may be recovered and recycled.		
Precautions to be Taken in Handling and Storing Store away from fire source. Wash contaminated containers before using. Minimize skin contact and wash hands before eating and smoking.		
Other Precautions Store in closed container away from heat, sparks, and combustible material. Store in cool dry area.		
Section VIII Control Measures		
Respiratory Protection (Specify type.) None		
Ventilation	Local Exhaust: NA	Special: None
	Mechanical (General): NA	Other: None
Protective Gloves Rubber		
Other Protective Clothing or Equipment Launder contaminated clothing before reuse.		
Work/Hygienic Practices After working, wash hands well with soap and water.		

Artisan Technology Group - Quality Instrumentation ... Guaranteed | (888) 88-SOURCE | www.artisantg.com

MSDS for LG 2 Grease

IDENTITY: LG 2 Grease		
Section I		
Manufacturer's Name SHOWA SHELL SEKIYU KABUSHIKI KAISKA		
Address 2-5 Kasumigasoki 3 Chome, Chiyoda-ku, Tokyo 100, Japan		Date Prepared November 21, 1991
Telephone Number 03-3580-0742		Signature of Preparer Y. Suita
Section 2 Product/Ingredient		
	Percent	Toxicity
LG 2	100	NA
Solvent synthetic hydrocarbons	Balance	Oil mist, TWA ACGIH/OSHA, 5 mg/m^3, oral LD >5 g/kg (rat) estimated dermal LD >2 g/kg estimated
Lithium soap	About 25	
Based on data available to Showa Shell, this product is not hazardous under OSHA Hazard communication Standard (29 CFR 1910, 1200). (IARC MONOGRAPH 33)		
Section 3 Health Information		
Route(s) of Entry	EYE CONTACT: May be irritating to the eyes. SKIN CONTACT: Prolonged or repeated skin contact may cause skin irritation. INHALATION? No specific information. INGESTION? No specific information.	
Signs and Symptoms of Exposure Irritation as above.		
Aggravated Medical Conditions Pre-existing skin disorder may be aggravated by exposure to this product.		
Other Health Effects This specific product has not been tested in long-term chronic exposure tests. The handling procedures and safety precautions in this MSDS should be followed to minimize employees' exposure.		
Section 4 Occupational Exposure Limits		
No OSHA/PEL or ACGIH/TLV has been established.		
Section 5 Emergency and First Aid Procedures		
Eye Contact Flush with water for 15 minutes while holding eyelids open. Get medical attention.		
Skin Contact Remove contaminated clothing and wipe excess off. Wash with soap and water or waterless hand cleaner followed by soap and water. Do not re-use clothing until thoroughly cleaned. If irritation persists, get medical attention promptly to prevent serious damage; do not wait for symptoms to develop.		
Inhalation Remove victim to fresh air and provide oxygen if breathing is difficult. Get medical attention.		
Ingestion: Get medical attention.		
Section 6 Supplemental Information		
None identified.		

Artisan Technology Group - Quality Instrumentation ... Guaranteed | (888) 88-SOURCE | www.artisantg.com

IDENTITY: LG 2 Grease		
Section 7 Physical Data		
Boiling Point °C: NA Specific Gravity: NA Vapor Pressure: NA Vapor Density: NA Appearance and Odor: White, slight odor grease Solubility in water: Insoluble Melting Point °C: NA		
Section 8 Fire and Explosion Hazards		
Flash Point (COC) °C	243 for base oil	
Flammable Limit % vol in air	LEL: NA	
	UEL: NA	
Distinguishing Media Use water fog, dry chemical, or CO_2. Do not use direct stream of water. Product will float and can be re-ignited on surface water.		
Special Fire Fighting Procedures and Precautions Do not enter confined fire space without proper protective equipment including a NIOSH approved self-contained breathing apparatus. Cool fire-exposed container, surrounding equipment, and structures with water.		
Section 9 Reactivity		
Stability: Stable.		
Hazardous polymerization: Will not occur.		
Conditions and Materials to Avoid: Strong Oxidizers.		
Hazardous Decomposition Product No_x, So_x, Co_x, and other unidentified oxygenates can be formed during combustion.		
Section 10 Employee Protection		
Respiratory Protection A NIOSH approved respiratory protection equipment should be used when vapor or mist concentration exceed applicable standards.		
Protective Clothing Use oil resistant gloves and other clothing to minimize skin contact.		
Section 11 Environmental Protection		
Spill or Leak Procedure Scoop up excess grease. Clean area with appropriate cleaner.		
Waste Disposal Dispose of in an appropriate disposal facility in compliance with appropriate regulations.		
Section 12 Special Precautions		
Store in a cool, dry place with adequate ventilation. Keep away from open flames and high temperature. Minimize skin contact. Wash with soap and water before eating, drinking, smoking or using toilet facilities. Launder contaminated clothing before using. Discard leather goods if they cannot be decontaminated. Wash before eating or smoking. Observe good personal hygiene.		

Artisan Technology Group - Quality Instrumentation ... Guaranteed | (888) 88-SOURCE | www.artisantg.com

MSDS for Braycote 803

Cat. No. 891-18 Braycote 803 Vacuum Grease

Ted Pella, Inc., P.O. Box 492477, Redding, CA 96049-2477
Phone (530) 243-2200 (Mon-Fri. 6:00 to 4:00pm P.S.T.)

Material Safety Data Sheet (3-21-2000)

Section 1 Product Identification:
Product Identification: Braycote 803
Common Name: Vacuum Grease
CAS No.: NA

Section 2 Physical Data:
Boiling Point: Decomposes at >500°F />260°C
Specific Gravity, (H_2O=1): 1.900
Vapor Pressure : ND
Vapor Density (Air=1): ND
Solubility in water : Insoluble
Evaporation Rate, (Butyl Acetate = 1): NA
% Volatiles: NA
Appearance and Odor: White colored grease; odorless
Molecular Weight: Not applicable

Section 3 Fire and Explosion Hazard Data:
Flash Point: none
Flammable Limits:
LFL: NA
UFL: NA
Auto ignition Temperature: Not Determined
Hazardous Products of Combustion: NFPA health hazard rating of "3" assigned due to toxicity of thermal decompsition products, fluorine (HF), otherwise the material itself warrants a health hazard rating of "1".
Hazardous Products of Combustion: Decomposition at high temperatures (>200°C) yields hydrogen fluoride, carbonyl fluoride, and other acid fluorides.
Extinguishing Media: not a fire hazard.
Fire Fighting Instructions: Water or foam may cause frothing. Use water to keep fire exposed container cool. Water spray may be used to flush spills away from exposure. For fires in enclosed areas, firefighters must use self-contained breathing apparatus. Prevent runoff from fire control or dilution from entering streams or drinking water supply.

Section 4 Toxicological Information:
NFPA Hazard Classification: Health= 3; Flammability= 1; Reactivity= 0
NFPA Hazard Rating (4= extreme; 3= high; 2= moderate; 1= slight; 0= insignificant):
Exposure Guidelines: Contains no ingredients now know to be hazardous by OSHA.
313 Listed Chemicals: There are no 313 chemicals present above threshold value.
Eye: May cause eye irritation.
Skin Absorption: No acute effects expected.
Ingestion: This product may cause gastrointestinal distress with symptoms of nausea, vomiting, diarrhea, and abdominal pain.
Inhalation: Inhalation of decomposition products (occurs if heated >300°C) or of smoke from

Artisan Technology Group - Quality Instrumentation ... Guaranteed | (888) 88-SOURCE | www.artisantg.com

contaminated tobacco products may cause respiratory irritation and induce Polymer Fume Fever condition. Symptoms of exposure to decomposition products are: lung irritation, pulmonary edema, flu-like symptoms (example - fever, chills). No medical conditions are known to be aggravated by exposure.
Chronic Effects: A review of the literature does not show obvious long term hazard.
Carcinogenicity: No component known to be present in this product at >0.1% is presently listed as a carcinogen by IARC, NTP or OSHA unless otherwise noted in Section P - Other Information.
Routes of Exposure: Skin contact, Eye contact, Inhalation

Section 5 Ecological Information:
No specific ecological data are available for this product.

Section 6 Emergency and First Aid Procedures:
Eyes: In case of contact, flush eyes with plenty of water. Get medical attention if irritation occurs.
Skin: In case of contact, wash thoroughly with soap and water. Obtain immediate medical attention if grease is injected under the skin.
Ingestion: Do not induce vomiting. Immediately give two glasses of charcoal slurry or plain water. Do not attempt to give anything by mouth to an unconscious person. Contact a physician.
Inhalation: Remove from exposure area to fresh air immediately. Administer oxygen if deemed necessary. Polymer Fume Fever symptoms should subside within 24 hours.

Section 7 Stability and Reactivity:
Chemical Stability: Stable under normal conditions
Conditions to Avoid: None known
Incompatibility with other materials: Active metals, metal oxides at temperatures >280°C. Lewis acid catalysts. Strong or non-aqueous alkali.
Hazardous Decomposition Products: Decomposition at high temperatures (>200°C) yields hydrogen fluoride, carbonyl fluoride and other acid fluorides.

Section 8 Exposure Controls / Personal Protection:
Personal Protective Equipment (PPE)
Eye/Face Protection: Safety glasses with side shield or chemical goggles.
Skin Protection: Use neoprene type gloves when handling this product.
Respiratory Protection: Use NIOSH/MSHA approved respirator with organic vapor cartridge if vapor concentrations exceeds permissible exposure limit. Not normally required; provide exhaust if temperature is expected to exceed 300°C.
Other: Impervious protective clothing and chemical resistant safety shoes should be worn to minimize contact. Wash contaminated clothing with soap and water and dry before reuse. Emergency shower and eyewash facility should be provided in all areas in which this product is handled.
Exposure Guidelines: Contains no ingredients now know to be hazardous by OSHA.

Section 9 Transportation Information
Hazardous Materials Description / Proper Shipping Name: Not Regulated
Hazardous Class: Not Regulated
Identification Number (UN or NA Number): Not Regulated
Packing Group: Not Regulated

Section 10 Disposal Considerations:
US EPA Hazardous Waste Numbers: This product, as purchased, does not fall under current U.S. EPA RCRA definitions of hazardous waste. Under RCRA it is the generator's responsibility to determine the status of the waste at the time of its disposal.
General Disposal Considerations: All recovered material should be packaged, transported and disposed

Artisan Technology Group - Quality Instrumentation ... Guaranteed | (888) 88-SOURCE | www.artisantg.com

of (or reclaimed) using good engineering practices. Disposal method must be in compliance with Local, State and Federal Regulations regarding health, air and water pollution. DO NOT BURN MATERIALS CONTAMINATED WITH THIS PRODUCT.
CERCLA Reportable Quantity: This product does not contain any CERCLA regulated materials.

Section 11 Regulatory Information:
U.S. Federal Regulations:
Hazardous per OSHA 29 CFR 1910.1200: Yes
CERCLA/EPCRA:
Section 302 Extremely Hazardous Substances (EHS): No listed ingredients are present on the 302 list.
Section 311/312 Hazard Class (es): Immediate: Yes
Fire: NO; Reactivity: NO; Sudden Release of Pressure: NO
Other U.S. Federal Regulations: This product is a mixture and is NOT listed in the TSCA Inventory. The individual ingredients in the product are listed in the TSCA Inventory.
International Regulations: One or more of the materials contained in this product does not appear on the Canadian Domestic Substances List (DSL).
Canada: This product has been classified in accordance with the hazard criteria of the Controlled Products Regulations and the MSDS contains all the information required by the Controlled Products Regulations for those regulated products.
This product is non-controlled under W.H.M.I.S.

NA= not applicable; ND= not determined

Ted Pella, Inc. makes no warranty of any kind regarding the information furnished herein. Users should independently determine the suitability and completeness of information from all sources. While this data is presented in good faith and believed to be accurate, it should be considered only as a supplement to other information gathered by the user. It is the User's responsibility to assure the proper use and disposal of these materials as well as the safety and health of all personnel who may work with or otherwise come in contact with these materials

Artisan Technology Group - Quality Instrumentation ... Guaranteed | (888) 88-SOURCE | www.artisantg.com

3 Installation

Overview

This section describes the installation procedures, including unpacking, mounting the robot on a frame or track, connecting components and external power supplies, and leveling the system. Detailed information for installing other components is given in the corresponding documentation.

These installation procedures assure maximum earthquake protection. It is your responsibility to ensure that the size and intended operation of the robot system does not interfere with any other equipment in your complete system.

Chapter Contents

Site Requirements 3-2
Unpacking and Inspection 3-4
Installation Procedure 3-6
Connecting the Robot and Controller 3-11
Setup 3-18
Safety Verification 3-20
Teaching and Operating 3-21
Check-out 3-23
Alignment and Calibration. 3-24

Artisan Technology Group - Quality Instrumentation ... Guaranteed | (888) 88-SOURCE | www.artisantg.com

Site Requirements

Before the Atmospheric Single-Arm Robot may be installed, the site where the product will be located must be properly prepared. This preparation includes ensuring that the proper facilities, including electrical and communications connections, are available and are properly prepared for connection to the product.

Space

The site for the Atmospheric Single-Arm Robot must meet the minimum space requirements to ensure proper clearance for installation, operation, and servicing of the product. It is the user's responsibility to ensure adequate space around the equipment for operation and service based on their needs.

CAUTION

All drawings within this manual are generic and may not reflect specific builds of the Atmospheric Single-Arm Robot. To obtain a complete and current set of drawings and documents contact Brooks Automation Customer Support.

Environmental

The site for the Atmospheric Single-Arm Robot must meet the minimum environmental requirements specified in Chapter 1 to ensure proper operation of the product.

The robot system is designed for cleanroom environments and conditions. The robot system is not intended for use in environments of explosive mixtures, corrosive conditions, high humidity, or dust.

Environmental specifications for operation are located in Chapter 1, Environmental Specifications on page 1-12.

Facilities Requirements

The user is responsible for providing the facilities specified in Chapter 1 for the Atmospheric Single-Arm Robot to ensure proper operation of the product. Refer to Chapter 5: *Operational Interfaces* for the wiring of all electrical connections.

Electrical, Mechanical, Vacuum, and seismic specifications can be found in Chapter 1, Specifications on page 1-12

Artisan Technology Group - Quality Instrumentation ... Guaranteed | (888) 88-SOURCE | www.artisantg.com

The user is responsible for the main disconnect device between the Atmospheric Single-Arm Robot and the facilities' power source, ensuring it complies with the correct electric codes. Service to the product should have the appropriate fuse or circuit breaker rating.

Artisan Technology Group - Quality Instrumentation ... Guaranteed | (888) 88-SOURCE | www.artisantg.com

Unpacking and Inspection

The product is shipped in separate packages which are individually sealed to maintain cleanroom conformance. Unpack each crate carefully following the steps provided in Unpacking Instructions on page 3-4; inspect and verify its contents against the checklist provided on the front page of the QR. Report any damage immediately to the shipper and to Brooks Automation.

The contents of the shipping crates will depend on the items purchased. Refer to the QR for the exact contents.

The Quality Report (QR) is a permanent record of the product as it was manufactured by Brooks Automation. In addition to providing information about serial number, model number, etc., it also provides critical data about load port designations, system assignments, station numbers, etc. Make copies of the form and keep a copy close to the product. Should maintenance be required, data from the QR will be needed.

Unpacking Instructions

CAUTIONS

Do not handle nickel-plated robots with bare hands. Use clean latex barrier gloves or similar gloves. Fingerprints will stain finish unless removed immediately with Windex ™.

Avoid manually lifting robots over 25 lb. (11Kg). The smallest robot weighs about 35 lbs. Refer to the instructions for moving robots or robotic systems in this chapter.

Avoid handling a robot by the arm or Z column.

1. Carefully examine the outer condition of the shipping crate before unpacking. Look for damage and determine if the shipping indicators on the shipping crate containing the product have been disrupted. Record observations and, if damage is seen, contact Brooks Automation and the carrier before proceeding.

2. Remove the cover of the shipping crate and remove the robot. Use a lifting device described in Moving the Robot or Robotic system on page 3-7 to remove the robot. Inspect and verify the contents of the crate against the QR. Do not remove any protective wrapping.

3. Remove the cover of the shipping crate for the Brooks Automation Smart Controller. Inspect and verify the contents of the crate against the QR. Do not

Artisan Technology Group - Quality Instrumentation ... Guaranteed | (888) 88-SOURCE | www.artisantg.com

remove any protective wrapping.

NOTE: *Save the shipping crate for possible future use. If the product is returned to Brooks for service or shipped to another location, the original shipping crate must be used.*

4. Remove cables, floppy disk, and manuals from the shipping box.

NOTE: *The Atmospheric Single-Arm Robot was assembled and bagged in plastic in a cleanroom environment. To ensure the cleanliness of the product, only unbag it in a cleanroom environment.*

HEAVY LIFTING

Ergonomic Hazard - The various Atmospheric Single-Arm Robot models have different weights. Failure to take the proper precautions before moving it could result in personal injury. Refer to the section Moving the Robot or Robotic system on page 3-7 for handling the robot.

5. Remove the bag from the Atmospheric Single-Arm Robot and the Smart Controller and carefully inspect the product for signs of damage that may have occurred during shipping.

6. Move the product to its final location.

RECYCLE

Recycle all packaging materials.

Artisan Technology Group - Quality Instrumentation ... Guaranteed | (888) 88-SOURCE | www.artisantg.com

Installation Procedure

The Atmospheric Single-Arm Robot is typically supplied in a standard configuration. The information required to install the standard configuration of the product is provided in the following procedures:

- Mounting on page 3-6
- Facilities Connections on page 3-13
- Communication Connections on page 3-14

Tools and Materials

The following tools and materials are required during the installation of the Atmospheric Single-Arm Robot.

- Standard hand tools
- Lifting device

Mounting

The robotic system is not intended for stand-alone use. The host tool provides power and instructions to the robot system. Brooks Automation recommends that you locate the operating controls outside the restricted envelope and protect it against inadvertent operation.

Place the controller so connections between controller and robot are not stressed. For electro-magnetic interference (EMI) protection, Brooks Automation recommends that you place the controller as close to the robot as possible. To minimize EMI, route cables along the metal chassis. Excess robot cables should be stored as described in Robot Cables on page 5-5.

The controller can be placed vertically or horizontally. Be sure that the fan vents on the robot and on the controller have at least 2 in (50.8 cm) of clearance from any obstruction or surface.

To properly install the robot, the host system must provide a proper mounting interface. Refer to your specific dimensional drawing to determine your mounting hole pattern and type. The two main mounting configurations are top mount (ATM series) and bottom mount (ABM series) robots.

- Top mount robots typically mount through a hole in a base plate in the host equipment. This hole should be 0.5 in (12.5 mm) larger than the robot body diameter. Four user-supplied #1/4-20UNC or M6 cap screws secure the robot to the base plate. The plate should be at least 0.5 in (12.5 mm) thick if made from aluminum and 0.38 in (9.6 mm) thick if made from steel.

Artisan Technology Group - Quality Instrumentation ... Guaranteed | (888) 88-SOURCE | www.artisantg.com

- Bottom mount robots mount on a base plate in the host equipment. Four user-supplied #1/4-20UNC or M6 cap screws secure the robot to the base plate. The plate should be at least 0.5 in (12.5 mm) thick if made from aluminum and 0.38 in (9.6 mm) thick if made from steel.

CAUTIONS

Failure to take the proper precautions before moving the Atmospheric Single-Arm Robot could result in personal injury. Use the lifting devices described in Moving the Robot or Robotic system on page 3-7 for moving the robot.

Safety glasses should be worn at all times when installing the product.

Moving the Robot or Robotic system

The smallest robot weighs about 35 pounds (15.88 kg) and the largest robot weighs about 85 pounds (38.56 kg). To lift a robot or a robot mounted on a track or frame, Brooks Automation recommends using the following lifting rings or a comparable load-rated substitute:

- Black Oxide coated Heat Treated Alloy steel ¼ -20 Hoist Ring made by American Drill Bushing Co. (P/N 23050). Four rings are required to lift a robot. Each ring is load rated for 550 pounds.
- 304-Stainless Steel ¼ -20 Hoist Ring made by American Drill Bushing Co. (P/N 23050-SS). Four hoist rings are required to lift a robot. Each ring is load rated for 275 pounds.

Either type ring can swivel 360 degrees and pivot 180 degrees. To attach the hoist rings and lifting device, follow these steps for either top-mounted or bottom-mounted robots:

1. Remove the ¼-20 set screw plugs on the top plate or base plate.
2. Install lift rings in the lift-ring holes on the plate.
3. Install the robot using a lifting device centered above the robot and attached to the lift points as shown in Figure 3-1.

Artisan Technology Group - Quality Instrumentation ... Guaranteed | (888) 88-SOURCE | www.artisantg.com

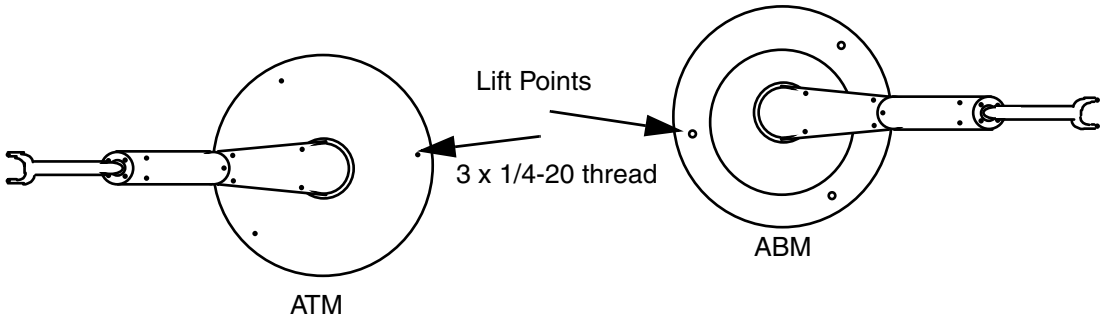

Figure 3-1: Lift Points for the Robot

4. Do not allow lifting device cables to contact or interfere with the robot arm while hoisting.

5. Remove the lift rings after the robot is bolted down.

6. Re-install ¼-20 set screws and level the robot.

7. Install the robot controller. Four mounting holes are provided. See the specific controller dimensional drawing for details.

Attaching the Robot to the Frame

To properly install the robot, the host system must provide proper interface mounting. Secure the robot using the mounting holes on the four corners of the bottom plate of the robot. Use four 3/8-inch bolts and eight ¼-20 leveling screws.

You can use standard mounting hardware to attach the robot to a host system frame. If you purchased your frame from Brooks Automation, all hardware, mounting, and leveling brackets are included. If you provide your own frame, be sure to include leveling brackets to level the robot.

The enclosure for the robot must be rigid enough to prevent any movement of the cassettes or other stations caused by the high acceleration loads.

Leveling the Robot

Level your system before teaching and prior to installing the end effector. For an end effector to work correctly, the wafers must be parallel to the end effector surface. The cassettes should be level to gravity, or slightly tilted back to prevent wafers from "walking" out of the cassette because of vibration.

Artisan Technology Group - Quality Instrumentation ... Guaranteed | (888) 88-SOURCE | www.artisantg.com

Because of manufacturing tolerances, the end effector might have a different angle with respect to gravity at each station. Brooks Automation recommends that each station is independently adjustable for roll and pitch.

Use the following procedure to level the robot, the arm links, and the end effector.

1. Level the host system. If the host system load station (load chuck) is not adjustable, adjust the host system to make it level.

2. Level the robot using the set screws on the robot mounting baseplate.

3. Disconnect AC power or turn off the robot servo motors by issuing the SVOF command.

4. Loosen the bolts securing the robot to the tool using a 3/16 Allen wrench.

5. Slightly extend the robot arm. Place the bubble level on the lower arm link centered over the Z column.

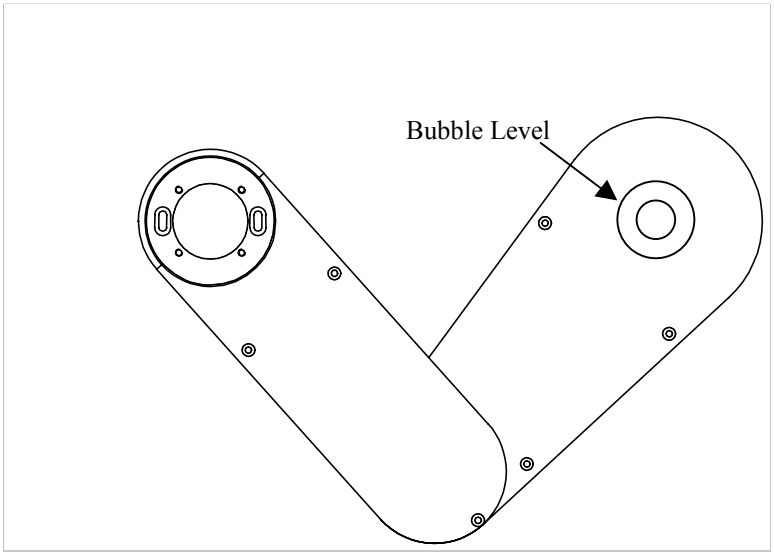

Figure 3-2: Leveling the Robot Arm

6. Adjust the three jackscrews on the baseplate with the 1/8 Allen wrench until the bubble indicates level.

7. Rotate theta 180° and check the bubble level again.

8. Tighten the three bolts securing the robot to the tool using the 3/16 Allen wrench.

Artisan Technology Group - Quality Instrumentation ... Guaranteed | (888) 88-SOURCE | www.artisantg.com

9. Mount and level the end effector.

10. To re-check the level, loosen the four socket head cap screws on the end of the end effector. Adjust the three set screws to level. Tighten the four socket head cap screws.

11. Level all other stations to make sure the end effector, cassette platforms, and stations are level. That is, the end effector must be parallel to the wafers at each station.

Artisan Technology Group - Quality Instrumentation ... Guaranteed | (888) 88-SOURCE | www.artisantg.com

Connecting the Robot and Controller

Brooks Automation provides an RS-232C connection for host control. The system host transmits ASCII commands to the controller through a DB25 male connector. The RS-232 serial port is located on the CPU card at the back of the controller box.

The RS-232 cable provides these connections: RX/TX, RTS/CTS, Signal GND, and Shield. The shield is either soldered to the D shell connectors at each end, or connected to the chassis of the host and controller by pigtail leads. The controller also provides eight optically isolated inputs and outputs as well as Motor Off, Stop, and Reset inputs through a DB37 female connector.

The baud rate (bits per second)is 9600.

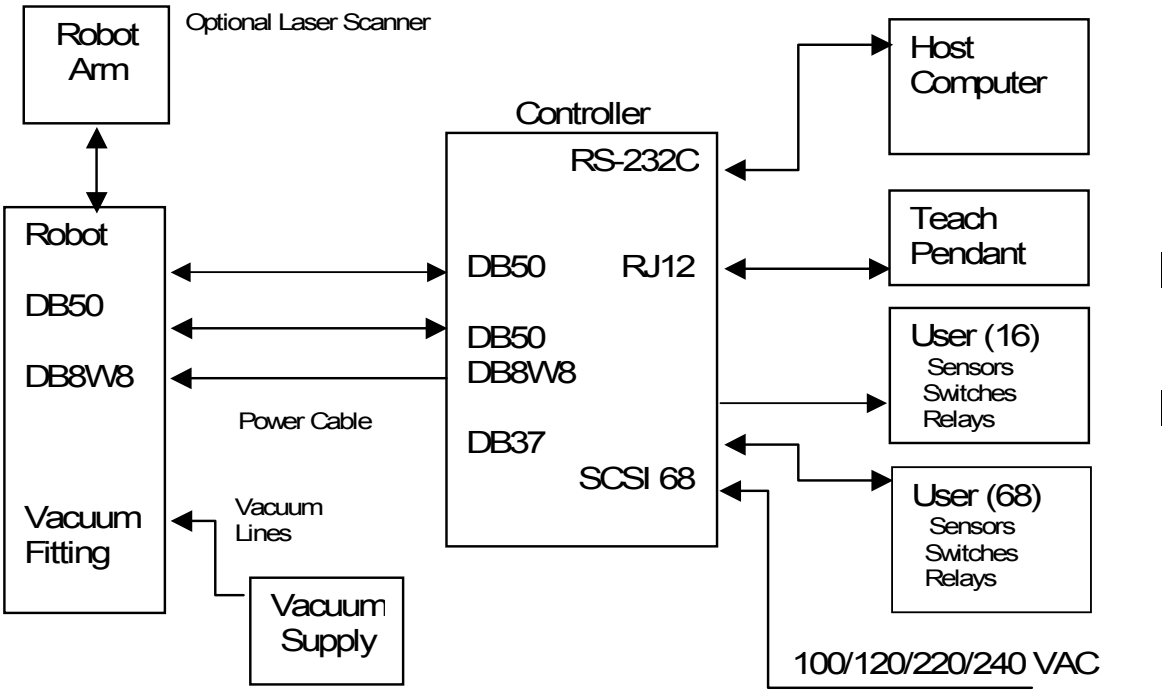

Figure 3-3: Robot Connections

The two signal cables connecting the robot and the controller are isolated from the power cable. A three-prong, 100/120/220/240 V_{AC}, 50/60 Hz cable is provided. The current draw is 5 amps at 100 or 120 V_{AC}, and 2.5 amps at 220 or 240 V_{AC}.

See Vacuum Specifications on page 1-15 for vacuum requirements.

The following are general instructions for connecting the robot to the controller, the

Artisan Technology Group - Quality Instrumentation ... Guaranteed | (888) 88-SOURCE | www.artisantg.com

controller to a power supply, and the robot to the vacuum system. Your robotic system might include a pre-aligner or track. For information specific to these units, see the manual for that unit.

Overcurrent Protection

Because the robotic system is not a stand-alone unit, SEMI S2 requires overcurrent protection of the end-user system. The minimum overcurrent ratings are 10,000 AIC for all 208/120-volt circuit protection devices and 14,000 AIC for all 480/277-volt circuit protection devices. These minimums are not required if the overcurrent protection device is located on the load side of another overcurrent protection device with the proper AIC rating mounted close to the equipment.

1. Connect the 50-pin and 8-pin cables between the robot and controller. Power up and observe the LEDs on the connector panel:
   - If the green LED lights up, the signal cables are correctly connected.
   - If the red LED lights up, power down and exchange the two signal cables.

2. Confirm the AC power setting on the voltage selector setting. Unless otherwise requested, the controller voltage is set to 120 V_{AC} when shipped.

CAUTION

Setting voltage incorrectly can damage the robotic system.

3. Ensure that the power source is properly grounded. Adherence to National Electrical Code is required.

4. With system power OFF, connect the controller AC power cable to an AC outlet connected to the host system EMO circuit.

5. Access a user interface, following instructions in the next section to connect the RS-232 cable between the host computer and controller or connect the Teach Pendant to the controller.

6. Verify that all cables are plugged into the appropriate connectors with the correct orientation and that they are all securely fastened.

7. Connect Interlock or I/O cables to the DB37 connector. Ensure that the signals are in normal running states. For more information on I/O, refer to the *Smart Controller Hardware and Software User's Manual*.

Artisan Technology Group - Quality Instrumentation ... Guaranteed | (888) 88-SOURCE | www.artisantg.com

8. Manually move the robot to the 0,0,0 position. In this position the Z axis is within 0.3 inch from the negative hard stop. The T axis is within 10° of the negative hard stop when turned in a clockwise direction. R-axis links are centered over each other.

Facilities Connections

The standard configuration of the Atmospheric Single-Arm Robot requires vacuum, communications, and electrical connections. Refer to the Facilities Requirements on page 3-2 for specifications.

DANGER

All facilities being supplied to the product must be disconnected per the facilities' lockout/tagout procedures before servicing to prevent the risk of personal injury or damage to the product.

CAUTION

Safety glasses should be worn at all times when connecting any facilities to the product.

Electrical

CAUTION

Do not connect the product's power supply to facility power until all installation procedures have been completed.

Connect the power cable. This should be to a customer system that is monitored with interlocks and an EMO system.

Vacuum

Connect the vacuum line from the system that the robot is mounted in to the Atmospheric Single-Arm Robot.

Artisan Technology Group - Quality Instrumentation ... Guaranteed | (888) 88-SOURCE | www.artisantg.com

Communication Connections

The standard configuration of the Atmospheric Single-Arm Robot communicates with a Host Controller. The following procedures provide the information required to make all communications connections to the product.

CAUTION

Never connect or disconnect the communications lines with power applied to the product as damage to internal components may result.

NOTE: *Alterations or changes to the software should only be made by qualified Brooks Automation personnel.*

Brooks Automation recommends that each operator control station that can initiate robot motion, has a readily accessible EMERGENCY STOP or EMO device. This includes the Teach Pendant; the SEMI S2 compliant TTR 200 has a red EMS button.

Another way to intereact with the robot is through the EQT 32 interface on a personal computer. Refer to the *Smart Controller Hardware and Software User's Manual* for details on using the EQT 32 interface and the Teach Pendant. You cannot use the EQT 32 interface and the Teach Pendant simultaneously.

Before connecting a Teach Pendant or installing the EQT 32 interface, follow these instructions to ready the controller.

1. Verify that all cables are plugged into the correct connectors in the correct orientation. Make sure they are securely fastened, using the integral jack screws supplied with the cables as needed.

2. Exit the restricted envelope before you apply power.

3. Power up the controller.

4. After boot-up, check the indicator LEDs located at the front of the controller. The following conditions indicate a "normal" condition:
   - The green LED is ON.
   - The yellow LED is flashing.
   - The red LED remains ON until the amplifiers are enabled.

Artisan Technology Group - Quality Instrumentation ... Guaranteed | (888) 88-SOURCE | www.artisantg.com

Connecting the Teach Pendant

If you have a TTR 200, refer to Chapter 12: *Drawings* for information about converting the TTR 200 DB15 connector to an RJ12 connector.

To avoid potential ESD and EMI problems, Brooks Automation provides a shielded cable for both the TTR-100 and the SEMI S2 compliant TTR-200. **If you are using a TTR 100 and do *not* have the shielded cable,** skip Steps 1 to 3 in the following instructions. *Always keep the cable unplugged when you are not using the Teach Pendant.*

1. Using a 3/16 hex driver, unsrew the 4-40 jack screw located between the COM2 port and the DB25 connection. Keep the star washer and screw.

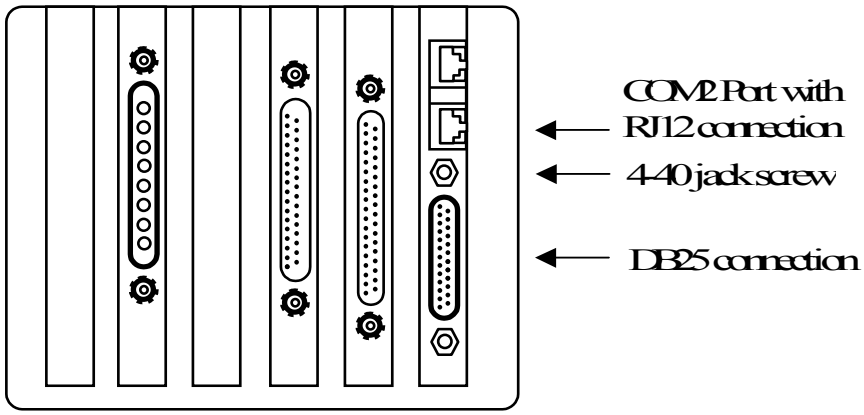

Figure 3-4: Controller Connections

2. Place the #6 ring lug on the grounding strap over the 4-40 screw hole. Do *not* cut or shorten the grounding strap.

3. Replace the 4-40 jack screw and star washer. Tighten.

4. Connect the Teach Pendant cable to the bottom RJ12 connector next to DB25 on the controller. This is the COM2 port. If you are using a TTR-200, ensure that the cable shields (through grounding strap or connectors) are grounded directly to chassis ground (equipment ground).

5. Access the Terminal mode by pressing `CTRL+T`, then press `T` again.

6. At the cursor, type SVON and press the Enter key. This turns on all servo motors. You should feel torque on the robot axes.

7. Type HOM and press Enter. This homes all axes of the robot and the pre-aligner, if present. When all axes are in the home position, the Teach Pendant

Artisan Technology Group - Quality Instrumentation ... Guaranteed | (888) 88-SOURCE | www.artisantg.com

displays a status message.

Installing the EQT 32 Interface

You can install the EQT 32 interface to be used with Microsoft Windows 95® or Microsoft Windows NT® 3.51 or later. Follow these steps to install the EQT 32 interface:

1. With Windows 95 or Windows NT running, insert the EQT 32 Setup Disk into your floppy drive.

2. Open the Windows Control Panel dialog box.

3. Open the Add/Remove Programs dialog box and click on Install.

4. Follow the instructions displayed on the window.

   You will be prompted for the previous location of your Eqt32 configuration file (Eqt32.ini). If you have parameters from a previous installation that you want to save, enter the directory location of the existing Eqt32.ini file. Your existing parameters will be combined with the new parameters.

5. To execute EQT 32, click the EQT icon. The Terminal Mode Window is displayed.

Artisan Technology Group - Quality Instrumentation ... Guaranteed | (888) 88-SOURCE | www.artisantg.com

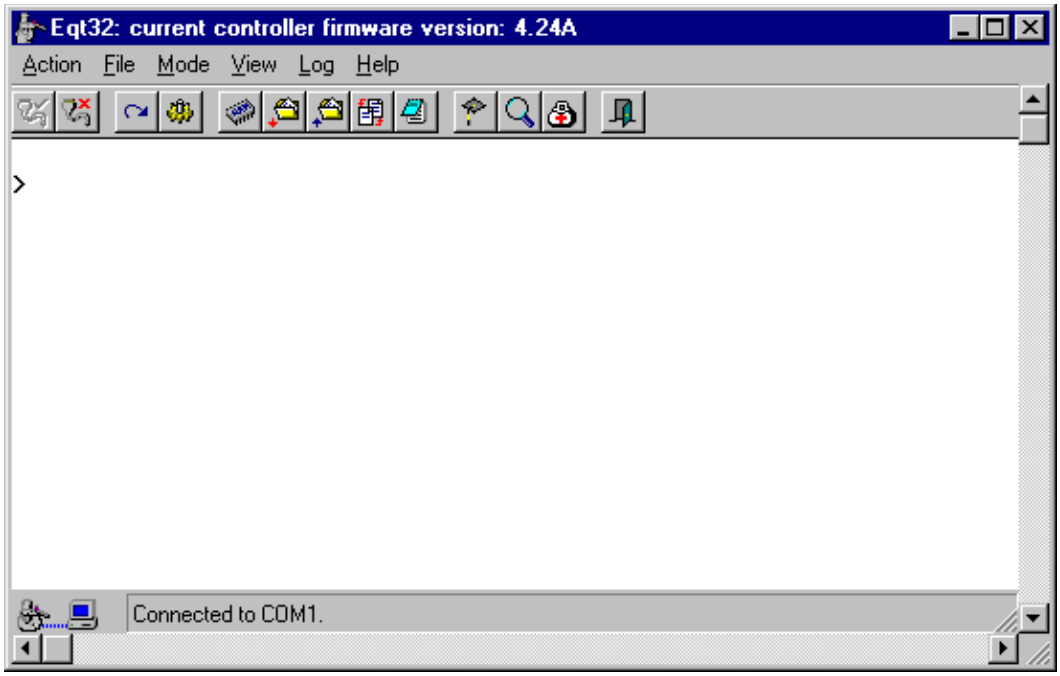

Figure 3-5: Terminal Mode Window

6. At the cursor, type SVON and press Enter. This turns on all servo motors. You should feel the torque on the robot axes.

7. Type HOM and press Enter. This *homes* all axes of the robot and optional components, such as track or pre-aligner. When all axes are homed, EQT displays a status message. A status message or code of 1000 or 1008 indicates all devices are working. Refer to the Troubleshooting chapter for more information on EQT 32 displays of command responses.

Artisan Technology Group - Quality Instrumentation ... Guaranteed | (888) 88-SOURCE | www.artisantg.com

Setup

Before the Atmospheric Single-Arm Robot is started for the first time, or after servicing the product, it is necessary to verify that it has been properly configured for operation.

Verifing Connections

When any cable between the robot and the controller or any cable within the controller is disconnected, the I/O board registers the broken connection(s) on its Port G. After making the connection, check the status of Port G with the command:

```
INPUT G
```

The INPUT command reads the value of the specified port and sends the results over the RS-232 line. If you send the command from the Teach Pendant, the results are displayed on the LCD screen. If you send the command from EQT 32, the results are displayed on the command line.

The INPUT command returns two hexadecimal digits that must be interpreted into eight binary bits. A result of all zeroes indicates a good condition. If any 1s are returned, refer to the bit descriptions for Port G to determine what the problem is.

Alternatively, you can read a specific bit rather than all eight bits (two hexadecimal digits). For example, to read Bit 2 of Port G, enter:

```
INPUT 10
```

In the following table, Bits 0 through 2 indicate cable connections between the robot and the controller. Bits 3 through 7 indicate cable connections within the controller.

Table 3-1: Cable Connections

Bit on Port G	INPUT Command	Description
0	INPUT 8	Amplifier internal connection and signal cable closed loop
1	INPUT 9	EMS, emergency stop (MOFF or motor off), input from customer I/O connector on the robot I/O card.
2	INPUT 10	Stop input from the customer I/O connector on the robot I/O card.
3	INPUT 11	Amplifier board under power. 0 indicates amplifier power supply ok. 1 indicates amplifier board is not receiving enough voltage from the linear power supply.
4	INPUT 12	Motor power supply indicator.

Artisan Technology Group - Quality Instrumentation ... Guaranteed | (888) 88-SOURCE | www.artisantg.com

Table 3-1: Cable Connections

Bit on Port G	INPUT Command	Description
5	INPUT 13	Robot interface board power supply.
6	INPUT 14	Switching power supply indicator.
7	INPUT 15	Bus power supply.

For more information about the INPUT command or I/O ports, refer to the *Controller User's Manual*. For information on commands that request the status of various system parts, refer to the Troubleshooting chapter.

Adjusting the Vacuum Sensor

See Adjusting the Vacuum Sensor on page 7-4 for instructions about adjusting the vacuum sensor.

Verifying Vacuum Sensor Connections

To test the connections, plug in the power cord. The LEDs on the face of the controller will light:

- Green LED on indicates the +5 V_{DC} power supply is functioning.
- A yellow LED blinks to indicate the CPU is running.
- A red LED light indicates an error, such as servo motors are off, I/O board is not ready, or there is a system error.

Artisan Technology Group - Quality Instrumentation ... Guaranteed | (888) 88-SOURCE | www.artisantg.com

Safety Verification

After making all connections and before teaching or operating the robotic system, verify that all safeguards are in place. Check off the following items as you verify them:

- EMERGENCY STOP devices are functional.
- Each axis moves and is restricted as intended.
- All interlocks function as intended.
- All safeguards are in place.

Make a visual check of the robot and maximum envelope to ensure that conditions that might cause hazards, do not exist.

If you have an SEMI S2 compliant Teach Pendant, function test the EMERGENCY STOP and motion controls to ensure proper operation. Repair any damage or malfunction before teaching or operating the system.

To verify that the safety interlock is functional, follow these steps.

1. Turn on the servo motors for all robot axes (SVON command).
2. Verify that the axes are locked by manually pushing the robot. The robot should not move.
3. Activate the safety interlock by opening a panel or door, or by triggering a presence-sensing device.
4. Manually push the robot. If the robot can move freely, the safety interlock is functional.

Artisan Technology Group - Quality Instrumentation ... Guaranteed | (888) 88-SOURCE | www.artisantg.com

Teaching and Operating

When you *teach* the robot system, you save the position, or coordinates, of the robot axes. In addition, if your system is equipped with a laser scanner, you teach the scanner positions and calibrate the laser scanner for this station.

Brooks Automation recommends training for anyone who programs, teaches, operates, maintains, or repairs a robot or robotic system. Brooks Automation offers end-user training courses that provide proper safety training to people responsible for the safe programming, operation, or maintenance of the robot.

Before issuing any macros that initiate automated robot actions, you must leave the restricted envelope.

Robot Axis and Station Naming Conventions

Brooks Automation robots use a three-axis system of motion.

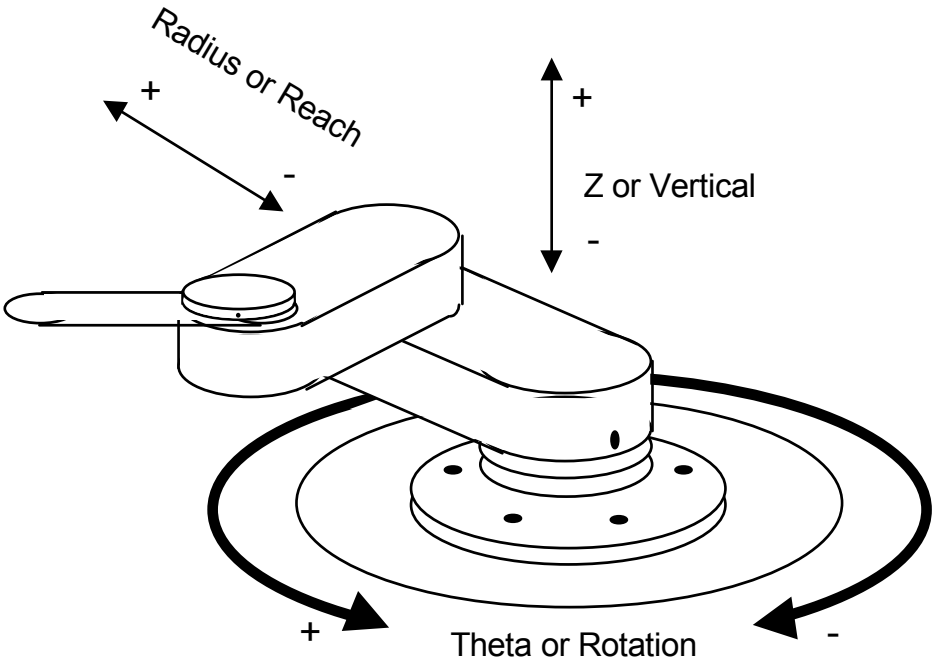

Figure 3-6: Polar Coordinate Positions

The polar coordinate positions are T, R, and Z:

- T (Theta) axis controls rotation of the arm.
- R (Radial) axis controls the reaching and retracting of the arm.
- Z (vertical) axis controls vertical movement.

Artisan Technology Group - Quality Instrumentation ... Guaranteed | (888) 88-SOURCE | www.artisantg.com

When axis parameters such as speed, acceleration, or current position are listed or modified by software commands, the parameter values for the three axes are always listed in the order T, R, Z.

To issue commands, define each station with a one-character name or letter. For example, the robot might get a wafer for Station A and put it in a cassette named Station B. Station names can be any upper or lower case letter. It is helpful to use a naming convention that suggests the function or location of the stations. For example, all upper case station names (A to Z) might be cassettes and all lower case station names (a to z) might be stands.

For a cassette station, you need to teach only the first wafer slot. The controller will use the pitch for each station to determine the distance between slots in the cassette.

Artisan Technology Group - Quality Instrumentation ... Guaranteed | (888) 88-SOURCE | www.artisantg.com

Check-out

Before the Atmospheric Single-Arm Robot is started for the first time, or after servicInitial Power-up Sequence

After the Atmospheric Single-Arm Robot has been installed and configured, it should be powered up and all connections should be checked out before proceeding any further with the installation process. This section describes the procedure for the initial installation check-out.

1. Check to ensure that all of the installation procedures previously described in this chapter have been completed.

2. Check to ensure that the Atmospheric Single-Arm Robot has been properly configured as described in the previous sections of this chapter.

3. Plug in the Atmospheric Single-Arm Robot's power supply to the plant's electrical services.

4. Following the directions for the power supply, turn on the power supply.

   The Power On indicator will light.

5. Perform a Ground Continuity check from the surfaces of the product to a known good ground.

6. If the initialization sequence executes without error, then the Atmospheric Single-Arm Robot has been properly installed and is ready for alignment.

CAUTION

Do not attempt to operate the Atmospheric Single-Arm Robot until all setup procedures described in this chapter have been completed.

Artisan Technology Group - Quality Instrumentation ... Guaranteed | (888) 88-SOURCE | www.artisantg.com

Alignment and Calibration

The Brooks Automation Atmospheric Single-Arm Robot must be aligned with the system that it will be operating in. Note that even a small misalignment can interfere with proper product operation and may cause wafer breakage.

The user must perform a complete alignment as part of installing the product in a system. Additionally, proper alignment should be verified after servicing the product. Refer to details in this chapter.

CAUTION

Do not attempt to use the Atmospheric Single-Arm Robot until the alignment procedures have been completed.

Artisan Technology Group - Quality Instrumentation ... Guaranteed | (888) 88-SOURCE | www.artisantg.com

4 Subsystems

Overview

This chapter provides a review of all major subsystems within the Brooks Automation Atmospheric Single-Arm Robot.

Chapter Contents

System Overview 4-2
Smart Controller. 4-3
Wafer Pre-Aligner 4-3
Linear Track 4-3
User Interfaces 4-4
Robot Accessories 4-5
End Effectors. 4-5
Laser Scanner 4-5

Artisan Technology Group - Quality Instrumentation ... Guaranteed | (888) 88-SOURCE | www.artisantg.com

System Overview

The following shows the connections in a Typical Atmospheric Single-Arm Robot system that includes the Smart Controller, Atmospheric Pre-Aligner, Teach Pendant, host computer, and track. Not all systems will contain all of these options.

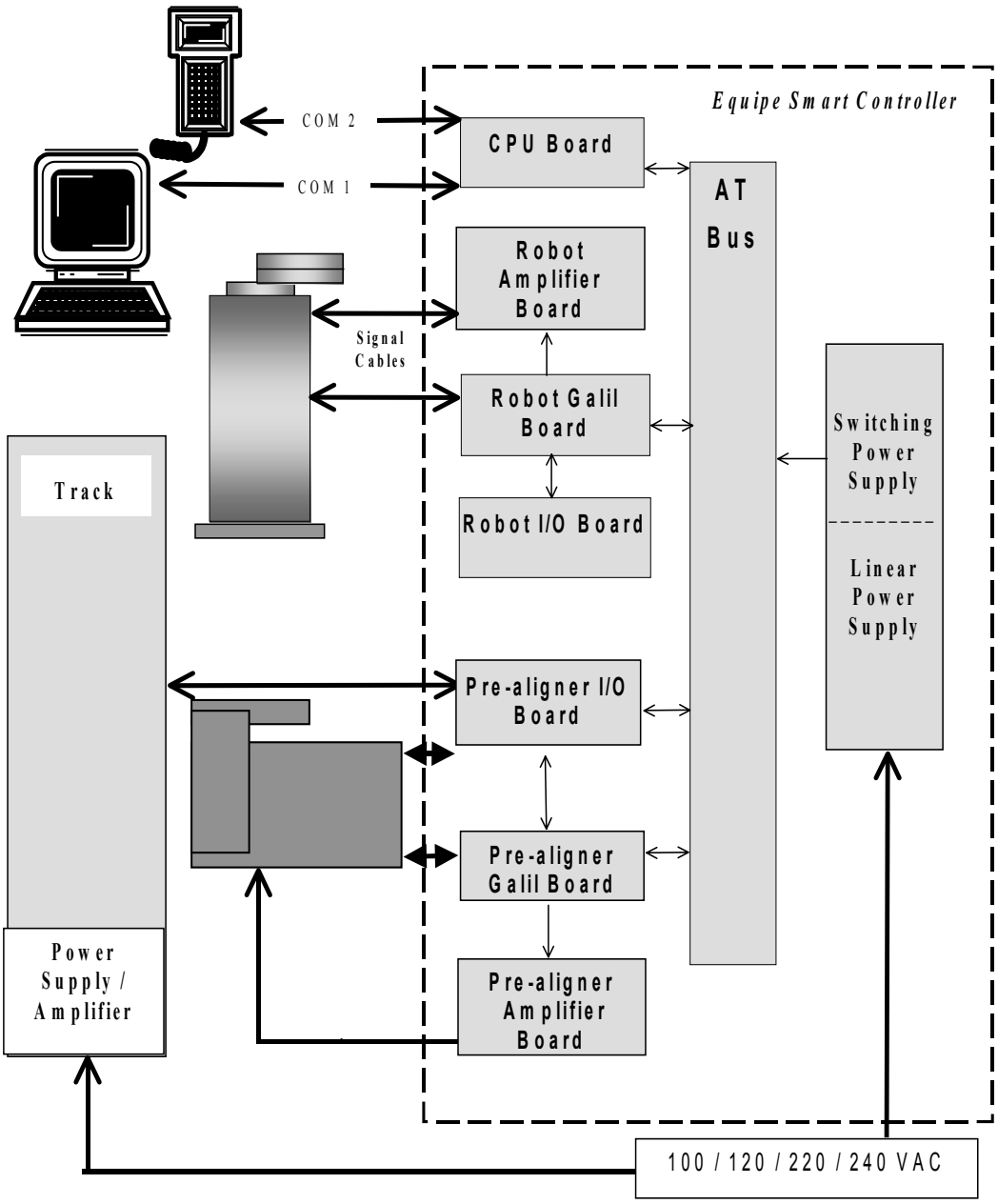

Figure 4-1: Atmospheric System Overview

Artisan Technology Group - Quality Instrumentation ... Guaranteed | (888) 88-SOURCE | www.artisantg.com

Smart Controller

The Smart Controller (ESC) controls the functions of the robot and other optional moving parts. The ESC provides servo control, power supplies, an optional user interface, and diagnostics for robots, pre-aligners, and track. The ESC and a host computer can communicate across an RS-232 line or the ESC can run stand-alone.

The ESC requires ac power. The ESC power cable and signal cables provide all power and control signals to the robot:

- The power cable provides 24 VDC for vacuum valves and PWM power for the servo motors.
- The signal cables provide the Galil motion controller board with encoder signals from the servo motors and vacuum solenoid, brake, or scanner commands to the robot, in addition to +5V and status indications.

For more information about the controller and printed circuit boards, refer to the *Smart Controller Hardware and Software User's Manual*.

Wafer Pre-Aligner

Wafer pre-aligners use high-resolution optical sensing (11.0 microns) to align wafers of 3 in. to 12 in. (75 mm to 300 mm) without mechanical changes or readjustments. Sensing capabilities automatically align to the major flat or notch. Direct encoder feedback on the wafer chuck and a linear light source provide optimum illumination of the charged couple device (CCD) sensor. For more information about the Brooks Automation Atmospheric Pre-Aligner refer to the Brooks Automation Atmospheric Pre-aligner User's Manual.

Linear Track

The Linear Track automatically moves the robot laterally between multiple stations that are positioned too far apart for a stationary robot. The Galil motion control board controls the track as a single axis.

The track does not use the power supplies or amplifier boards in the ESC. It has an integrated power supply and amplifier motor driver.

A track can be any length from 36 inches (457.2 mm) to 16 feet (4.88 mm) in 6-inch (152-mm) increments.

Artisan Technology Group - Quality Instrumentation ... Guaranteed | (888) 88-SOURCE | www.artisantg.com

User Interfaces

You can interface with the Smart Controller using a personal computer or a hand-held Teach Pendant. With a PC, you have the advantage of a full screen for editing macros or parameter files and the convenience of transferring files between the Smart Controller and PC. The small size of the Teach Pendant allows you to walk around the robot and observe closely as you command its movement.

For more information about the user interface refer to the *Smart Controller Hardware and Software User's Manual*.

Artisan Technology Group - Quality Instrumentation ... Guaranteed | (888) 88-SOURCE | www.artisantg.com

Robot Accessories

End Effectors

The two standard end effectors are the horseshoe end effector and the blade end effector.

A *dual* end effector has two surfaces for lifting wafers. The ends are directly opposite each other. OEM Systems does not sell dual end effectors, but does provide the software for operating them. Each end effector is defined by a number and each taught station is assigned an end-effector number. That is, one end effector can be used by the robot to get a wafer from a cassette loading station while the other end effector is used to get a wafer from a processing station.

Laser Scanner

The optional laser scanner is mounted on a robot arm to detect the presence of wafers in cassettes. The Smart Controller sends information back to the host, indicating the presence, absence, or cross slotting in each wafer position. The macros use this information to provide automatic transfer of wafers.

The robot orients the laser scanner toward the wafer cassette and moves the Z axis to pass the laser vertically in front of each cassette slot. As the robot moves, the scanner emits laser pulses towards each cassette slot. A photodetector receives any laser reflections from any wafers in the cassette.

The amplified signal from the photodetector is digitized and passed to a digital signal processing (DSP) unit. The DSP internal memory stores the received signals and compares them with emitted laser pulses to generate an OUT signal. Using the OUT signal, the controller captures the position at which the laser hits a wafer. This is compared to the expected position of each slot to generate a wafer *map*.

Artisan Technology Group - Quality Instrumentation ... Guaranteed | (888) 88-SOURCE | www.artisantg.com

This Page Intentionally Left Blank

Artisan Technology Group - Quality Instrumentation ... Guaranteed | (888) 88-SOURCE | www.artisantg.com

5 Operational Interfaces

Overview

This chapter provides a description of all the operational interfaces to the Brooks Automation Atmospheric Single-Arm Robot. These interfaces provide communications and power to the product from the controller.

Chapter Contents

Interface Overview 5-2
Power Connections 5-4
Electrical Connections 5-4
High Voltage Barriers 5-4
Controller Fuses 5-4
Ground Connections 5-4
Robot Cables 5-5

Artisan Technology Group - Quality Instrumentation ... Guaranteed | (888) 88-SOURCE | www.artisantg.com

Interface Overview

The robot and controller comprise the basic wafer handling system.Three cables connect the robot and the controller:

- Two 50-pin, D-sub signal cables. The robot and controller send and receive signals over the signal cables.
- One 8-pin, high-power, D-sub power cable that carries the current to the amplifiers. The output power that drives the T, R, and Z-axis motors to the correct position is sent from the controller to the robot.

The controller has up to three communication ports that can provide various communication connections:

- The optional Teach Pendant uses a 6-pin modular connection to an RJ12 jack for connection to COM1.
- The host computer 25-pin D-sub can connect to an RS-232 cable for host computer to controller communication. The signal cable is connected to a DB25-pin male connector RS-232 serial port.
- An optional third communication port can be used for connection to other equipment, such as an elevator or indexer.

For more information about communication connections, refer to the *Smart Controller Hardware and Software User's Manual*.

The controller has additional external connections:

- The controller I/O board(s) provides optically isolated external inputs and outputs. The input lines read signals from components such as cassette sensors. The output lines control external devices such as a relay of up to 50 V_{DC} at 200 mA.
- The two power supplies are switching and linear. The switching power supply provides power to the PC bus and the linear power supply provides power to the amplifier modules.

Figure 5-1 shows the typical connections for a typical system using the Atmospheric Single-Arm Robot.

Artisan Technology Group - Quality Instrumentation ... Guaranteed | (888) 88-SOURCE | www.artisantg.com

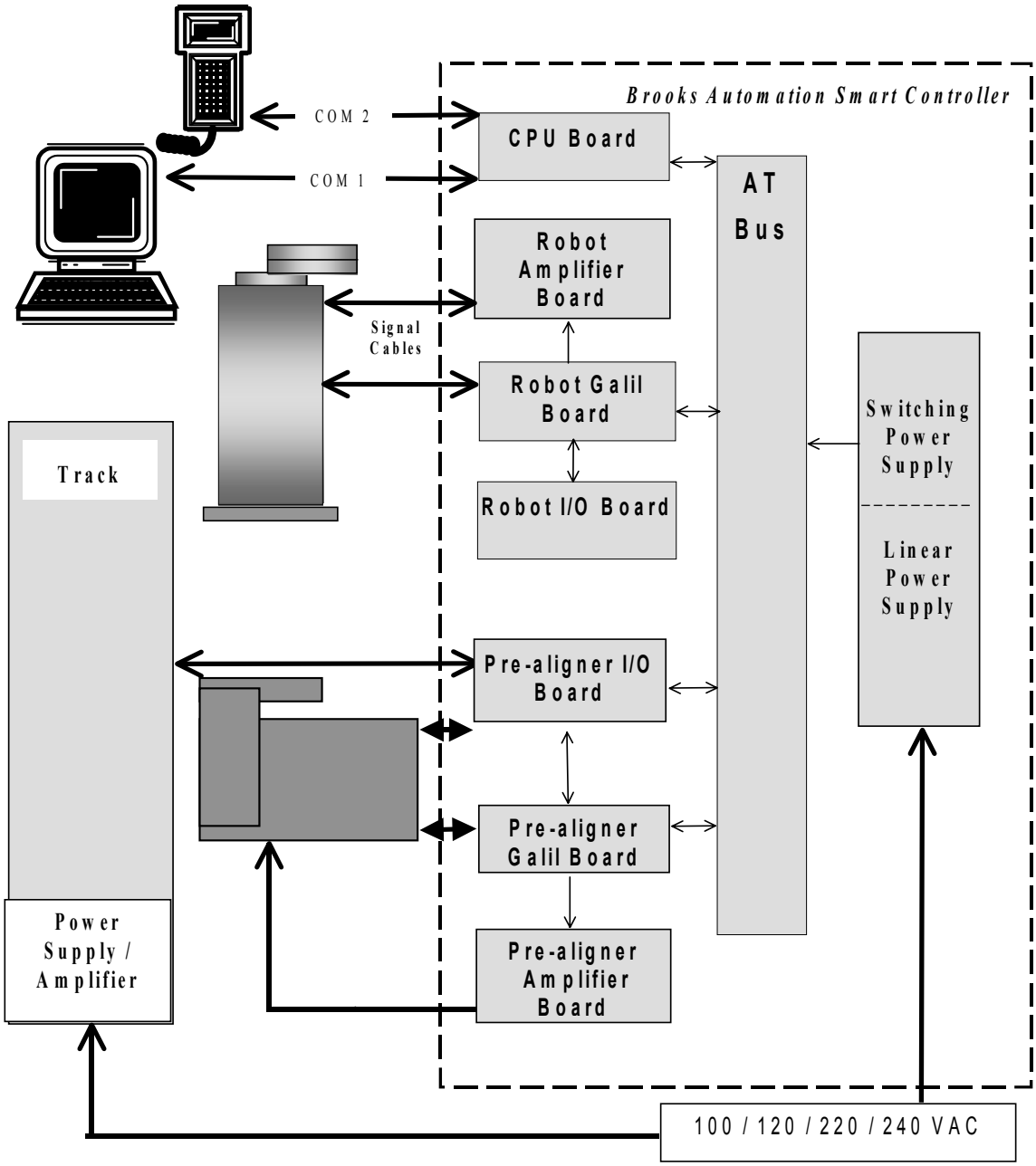

Figure 5-1: Typical Robot Connections

Artisan Technology Group - Quality Instrumentation ... Guaranteed | (888) 88-SOURCE | www.artisantg.com

Power Connections

NOTE: *The facility is responsible for the main disconnect device between the Atmospheric Single-Arm Robot and the facilities' power source, ensuring it complies with the correct electric codes. Service to the product should have the appropriate fuse or circuit breaker rating.*

Electrical Connections

In compliance with CE Mark requirements, controller power is to be connected to the power source that is under Emergency Off (EMO) control.

In compliance with CE Mark safety requirements, the equipment main power cord must comply with HD 21 or HD 22 specifications.

High Voltage Barriers

All areas with circuit voltages higher than 30VRMS have grounded conductive barriers. Only trained personnel can remove these barriers and a tool is required to remove the barriers. Electrical hazard labels on the robot, controller, and optional pre-aligner alert personnel.

Controller Fuses

The fuse rating of the controller is 5 Ampere (A), 250 Volt (V). Replace the fuses only with slow blow 5A 250 V buss fuses. The fuse safety label is attached adjacent to the power supply input on the controller.

Caution - Risk of Fire 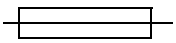 T
Replace with T5A 250V Fuse Only

Ground Connections

As a safety precaution, visually inspect all green and yellow safety ground wires to ensure they are securely in place.

Artisan Technology Group - Quality Instrumentation ... Guaranteed | (888) 88-SOURCE | www.artisantg.com

Robot Cables

If you replace a cable or move the robot cables, inspect it to make sure all connector screws are tightly connected. If there is excess cable, the following steps are recommended to reduce the noise level and protect against electro-magnetic interference (EMI).

1. Fold the excess length as shown in Figure 5-2.

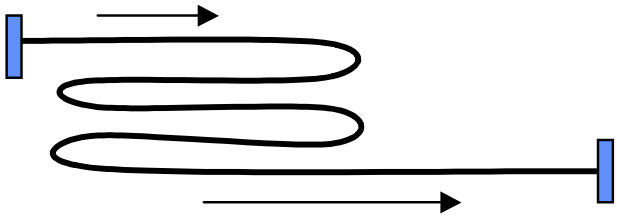

Figure 5-2: Folding a Cable

2. Tightly gather the loops of cable and tie with three cable ties as shown in Figure 5-3.

Figure 5-3: Folded Cable Tie-Wrapped

3. Press the gathered cable against the metal robot chassis. Pack the cable tightly against the chassis.

Artisan Technology Group - Quality Instrumentation ... Guaranteed | (888) 88-SOURCE | www.artisantg.com

This Page Intentionally Left Blank

Artisan Technology Group - Quality Instrumentation ... Guaranteed | (888) 88-SOURCE | www.artisantg.com

6 Operation

Overview

This chapter provides complete operation directions for the Brooks Automation Atmospheric Single-Arm Robot. The operation of the product is covered for both normal conditions and emergency conditions.

Chapter Contents

Theory of Operation 6-2
Moving and Homing a Robot Axis 6-3
Teaching Stations 6-4
Setting the Optional Z-Axis Brake. 6-5
Teaching a Robot Only 6-6
Teaching a Robot and Pre-Aligner 6-7
Scanner Mapping 6-9
Teaching the Scanner Mapping 6-11
Robot Parameter File 6-14
Flipper End Effector. 6-16

Artisan Technology Group - Quality Instrumentation ... Guaranteed | (888) 88-SOURCE | www.artisantg.com

Theory of Operation

This chapter is intended to give users of these systems general information on how the Brooks Automation Atmospheric Single-Arm Robot operates. It is not intended to be a complete reference for someone developing the associated software and hardware necessary for Atmospheric Single-Arm Robot operation.

Artisan Technology Group - Quality Instrumentation ... Guaranteed | (888) 88-SOURCE | www.artisantg.com

Moving and Homing a Robot Axis

The range of travel of each axis is physically limited by mechanical hard stops and, with the exception of the arm axes, is electronically guarded by two limit switches. The negative and positive limit switches are located within the full travel of the hard stops. The negative limit switch is also the home switch for the Theta and Z-axes. The R axis has one limit switch, the negative limit or home switch. Software limits are logical limits that apply to programmed motions.

A DC servo motor, a servo driver or amplifier, and a motion control board control the robot axis. The servo motor is directly connected to an optical encoder. The encoder and limit switch signals are input to the Galil motion control board.

The Galil motion control board monitors the motor position by reading the optical encoder and outputs a signal that controls the servo amplifier current. The amplifier module amplifies the signal and sends the power to the motor. The encoder on the motor provides feedback to the motion control board to create the next output signal.

You can home the robot axis with a standard homing macro (HOM) or with the HOME command. During the robot homing sequence:

1. The robot axis moves towards the home switch at the Home speed defined in your robot parameters file (*.par file).

2. When the robot axis reaches the home switch, the home flag interrupts the limit switch.

3. With the switch interrupted, the robot axis moves away from the home switch until the controller senses the first index pulse from the encoder.

4. The encoder outputs one index pulse for each revolution. The motion control board uses the encoder signals to generate a quadrate signal for the CPU. This first index pulse provides a zero reference point that is more repeatable than the home switch used to home the robot when the system is initialized.

5. The motion control board zeroes the position counter, which is then used as the zero or home position.

6. The Home offset is read from the Robot Parameter File and written to the motion control board register. The Home offset is stored in encoder or quadrate counts.

7. The robot axis then moves to the Customized home position, which is also defined in the Robot Parameter File. The default for the customized home position is 0, but you can re-define it.

Artisan Technology Group - Quality Instrumentation ... Guaranteed | (888) 88-SOURCE | www.artisantg.com

Teaching Stations

Review the following figure and definitions before teaching stations.

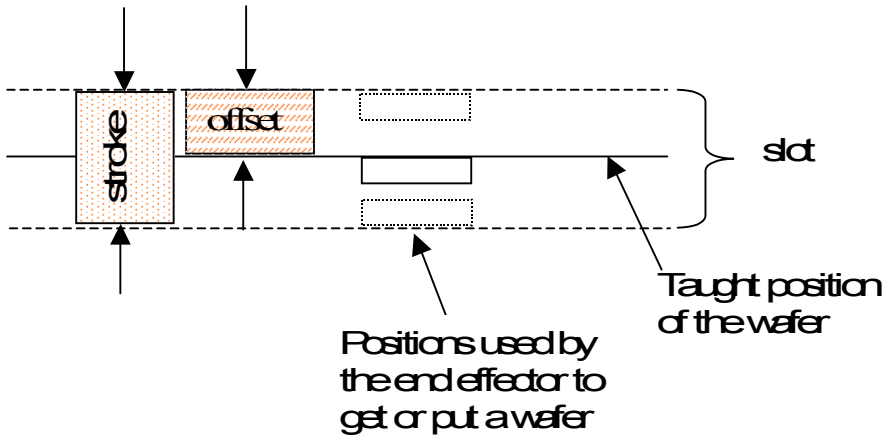

To **GET** a wafer from a slot or to **PUT** a wafer in a slot, the movement of the end effector requires space above and below the final position of the wafer. When you teach a station, you are prompted for the *stroke* and *offset* parameters.

Taught Position of the Wafer sets the positions of the Theta and Radial axes such that the end effector is at the center of the wafer. The position of the Z axis is the basis for the Offset and Stroke values.

Offset sets the limit on Z travel *above* the taught position. This distance is required for placing a wafer in a slot or removing a wafer without touching the side of the cassette.

Stroke sets the limit on Z travel *below* the taught position for a given Offset.

Together, the Offset and Stroke provide sufficient Z travel within the cassette for **GET** and **PUT** movements without the wafer touching any part of the cassette. For example, if the taught position is 100, the offset is 35, and the stroke is 75, then the upper Z-travel limit is 135 (taught position + offset) and the lower Z-travel limit is 60 (taught position + offset - stroke).

Artisan Technology Group - Quality Instrumentation ... Guaranteed | (888) 88-SOURCE | www.artisantg.com

Setting the Optional Z-Axis Brake

The Z-axis brake is an option on the heavier robots with longer arms. The Z-axis brake prevents the Z column from backdriving with the force of gravity. Line 20 of the Robot Parameter File lists the Z-axis parameters:

- First parameter is the numerical port ID used for turning the brake on or off. If there is a brake, the number is normally 4, and if there is no brake, the number is 0.
- Second parameter is the Z-axis Gain Offset. The Z-axis Gain Offset sets the bias voltage in the motor output to counter gravity. If the value is other than zero and the robot is installed upside down, the value must be negative.
- Third parameter is always 0.

If there is a brake and the first parameter is set correctly, the controller engages the brake port automatically when the **SVOF** command is executed or disengages the brake when the **SVON** command is executed. The brake is activated when the Z-axis servo motor is turned off or a motor position error occurs.

To *manually* engage or disengage the brake, send the **OUTP** command from the Teach Pendant or EQT command line, as shown in the following instructions.

CAUTION

Make sure the end effector is clear of obstacles before turning off the brake and Z-axis servo motor. The Z axis can drop under the force of gravity if the brake and the servo motors are off. Wafer and robot damage can result.

1. **To turn off the servo motor, enter the command:**
   SVOF Z

   This causes the Z-axis brake to turn on.

2. To turn off the brake, enter:
   OUTP 4,1

3. Manually move the Z column a short distance. The brake re-engages because a position error is registered.

4. Re-send the command:
   OUTP 4,1

The brake should remain off. You can now move the Z column manually.

Artisan Technology Group - Quality Instrumentation ... Guaranteed | (888) 88-SOURCE | www.artisantg.com

Teaching a Robot Only

Use a Teach Pendant or EQT interface to teach the robot stations. General steps are given here for teaching a robot-only system. For specific information on how to use the Teach Pendant or the EQT interface for teaching, refer to the *Smart Controller Hardware and Software User's Manual*.

For the following example steps, there are two cassette stations, Station A and Station B, and one stage position, Station C.

1. Place the wafer on the end effector.

2. Turn off the servo motor for the T and R axes.

3. Manually adjust the robot arm to face the first slot in the cassette for station A. Raise or lower the Z axis. Manually adjust the R axis until the wafer is inside the first slot of the cassette.

4. Gently lower the Z axis until the wafer is just touching the edges of the slot.

5. Select Station A. Press Enter or Teach to save or teach Station A. For stroke and offset parameters, you can use the defaults or try 75 and 50. These parameters are saved in the coordinate file with the station location and can be adjusted later.

6. Teach Station B, using the method you used for Station A.

7. To teach Station C, the stage position:
   - Place the wafer on the end effector.
   - Turn off the R and T servo motors.
   - Manually adjust the robot arm to the stage while raising or lowering the Z axis.
   - Manually adjust the R axis until the wafer is above the stage. Lower the Z axis until the wafer is just resting on the stage.
   - Save the position, stroke, and offset for Station C.

8. Test the station coordinates by sending several GET and PUT instructions:
   - Manually place a wafer on Station C.
   - Get the wafer from Station C.
   - Put the wafer in slot 1 of Station A.

Artisan Technology Group - Quality Instrumentation ... Guaranteed | (888) 88-SOURCE | www.artisantg.com

Teaching a Robot and Pre-Aligner

Use a Teach Pendant or EQT interface to teach the robot and pre-aligner stations. General steps are given here for teaching an integrated system. For specific information on how to use the Teach Pendant or the EQT interface for teaching, refer to the *Smart Controller Hardware and Software User's Manual*.

You need your axis assignments and station names for teaching. In the following example steps, it is assumed there are two stations: Station A is the pre-aligner station and Station B is the cassette station.

For an integrated system, first align the wafer and teach the pre-aligner position. If this step is not taken, the robot will try to put the aligned wafer in the same slot as it was before the aligning. The taught positions do not change, but the position of the wafer on the end-effector will be different.

1. Access Teach mode.

2. Place the wafer on the chuck of the pre-aligner.

3. Turn on all servo motors.

4. Align the wafer. To align the wafer with the Teach Pendant, press `CTRL+Y`. To align the wafer in EQT, press the ALIGN button on the Teach window.

   The pre-aligner aligns the wafer to the center of the chuck.

5. Turn off the servo motors for the T and R axes.

6. Manually orient the robot arm to the wafer while raising the Z axis with the Z-axis control button. Manually adjust the R axis until the top of the end effector is just touching the bottom of the wafer.

7. Select the station name and save the position.

8. With the aligned wafer on the pre-aligner, turn on the servo motors for the T and R axes.

9. Set the stroke and offset for the pre-aligner. Use the defaults, 80 and 35, and then adjust the numbers.

10. With the aligned wafer on the end-effector, turn off the servo motors for the T and R axes.

11. Manually orient the robot arm to the first slot in the cassette while raising or lowering the Z axis with the Z-axis control button. Manually adjust the R axis

Artisan Technology Group - Quality Instrumentation ... Guaranteed | (888) 88-SOURCE | www.artisantg.com

until the wafer is inside the first slot of the cassette.

12. Gently lower the Z-axis until the wafer is just resting on the edges of the slot.

13. Select Station B. Press Enter or Teach to save the coordinates for Station B, the cassette station.

14. Set the stroke and offset for Station B. Use the defaults. For most wafer sizes, the defaults are 75 and 50. Adjust the defaults as necessary.

15. With the aligned wafer still on the end-effector, manually move the robot arm out of the cassette.

16. Turn on the servo motors for the T and R axes.

Artisan Technology Group - Quality Instrumentation ... Guaranteed | (888) 88-SOURCE | www.artisantg.com

Scanner Mapping

For 6.0+ firmware, if Scanner support is not enabled on your system, scanner commands will return a ? prompt. If this happens, contact your Brooks Automation representative for information on enabling features.

The mapping operation consists of several steps. You run the **MAP** macro (**MAP** <station name>) by issuing the command from Terminal mode on the Teach Pendant, EQT, or from your host system. The **MAP** macro can vary from system to system, but the normal sequence of robot actions is as follows:

1. Moves to the taught position where the sensor is at the prescribed distance from center on the T axis (T-axis Offset), the correct focal distance (R-axis Offset) away, and below the first slot of the cassette (Z-axis Offset).

2. Turns on the laser scanner.

3. Makes the first scan pass.

4. Turns off the laser scanner.

5. Offsets an equal and opposite distance from center on the T axis and moves Z distance down.

6. Turns on the laser scanner.

7. Makes the second scan pass.

8. Turns off the laser and retracts.

During each scan pass, the laser sensor passes in front of each wafer in the cassette. When the laser meets the edge of a wafer, the reflected signal is sensed and a change of state occurs. Another change of state occurs when the sensor no longer "sees" the wafer. The Z-axis coordinates for the changes of state are stored, compared, and processed by the controller. Using the various scanning parameters, the controller determines the status of each slot and stores this information.

At this point, you can query the controller for the scan results of a specified slot or all slots by using the RSR macro, which calls the RSS command. The slot status is given by one digit, as follows:

0 = No wafer in slot.
1 = Wafer in slot.
2 = Wafer cross-slotted between two slots.
3 = Scanner failed to detect the wafer (error condition).

Artisan Technology Group - Quality Instrumentation ... Guaranteed | (888) 88-SOURCE | www.artisantg.com

For example, if all slots are queried, a string of digits is returned:

1000111112211111000112 21

The first digit represents slot 1 and slot 1 has a wafer. The second digit is slot 2, and slot 2 has no wafer, and so on.

Artisan Technology Group - Quality Instrumentation ... Guaranteed | (888) 88-SOURCE | www.artisantg.com

Teaching the Scanner Mapping

To turn on the power for the scanner, use the command **OUTP 3,1** and enable the scanner using **OUTP 2,1**.

Line 24 of the Robot Parameter File contains the Scanner Offset. The first parameter of the Scanner Offset is always 0, the second parameter is the R-axis Offset, and the third parameter is the Z-axis Offset. As examples:

0, 1750, 320

0, 1500, 320

The type of laser scanner determines the focal point, 1.50 in or 1.75 in. The instructions here assume 1.75 in, which works in most cases.

The R-axis Offset positions the scanner head to the 1.75 in focal point:

- If the scanner head can touch the first wafer, the R-axis Offset is 1750.
- If the scanner head cannot touch the first wafer due to a physical obstruction at the base of the cassette, but can touch other wafers, the R-axis Offset is 1750.
- If the scanner head cannot touch any wafer, the R-axis Offset is 0.

The Z-axis Offset positions the laser emitters just below the first wafer.

- If the scanner head can touch the first wafer, the Z-axis Offset is 320.
- If the scanner head cannot touch the first wafer, but can touch other wafers, the Z-axis Offset is calculated as 320 – (Slot# - 1) x Pitch/10.
- If the scanner head cannot touch any wafer, the Z-axis Offset is 320.

When teaching the scanning coordinates, you move the robot arm to a position where the top of the sensor is level with the top of, and touching, the center edge of a wafer in the first slot. The offsets then move the sensor to the correct coordinates for a good scan. The sensor should not "see" a wafer until the Z-axis motion. If a wafer is detected before the scan motion begins, the scan fails and the robot arm retracts.

In our teaching example, the scanning coordinates for Station "a" scan the input cassette for wafers. This example gives instructions specific to the Teach Pendant. Before you teach the scanner, ensure that all components are level.

1. Access Terminal Mode on the Teach Pendant.

2. Check the system status by running the STAT command. Verify that **STAT** returns an OK indication. A normal return is 1000 or 1008.

Artisan Technology Group - Quality Instrumentation ... Guaranteed | (888) 88-SOURCE | www.artisantg.com

3. Enter **DCSI** and the station name. This entry runs the **DCSI** macro that sets the Default Coordinate Special Items for the station. No response is returned.

4. Access Teach Mode. The Teach Pendant hotkeys in Teach mode vary by firmware.

Table 6-1: Teach Pendant Hotkeys

6.0+	Pre 6.0	Teach mode hotkey
Yes	Yes	`CTRL+Y` to align
Yes	Yes	`CTRL+X` to exit Teach mode
Yes	Yes	`CTRL+S` to toggle scanner mode on and off
Yes	Yes	`CTRL+F` to toggle between robot and flipper
Yes	No	`CTRL+E` to exit Teach mode and return control to Com1, EQT
Yes	No	`CTRL+T` to toggle between robot and track

5. Press `CTRL+S` to access the Scanning Mode. An asterisk appears next to the station identifier in the right corner of the Teach Pendant screen.

6. Press the CHANGE COORD (D) key, select the correct station letter, and press Enter.

7. Toggle off the servo motors.

8. Physically move the robot arm so that the top of the sensor head is flush with the top of the wafer seated in slot #1 of the cassette, and touching the center edge of the wafer.

   - *If the scanner head cannot touch the first wafer, but can touch another wafer,* teach the scanner using the next available slot rather than slot 1. Make sure the Z-axis Offset is set as instructed in the introduction to this procedure.
   - *If the scanner head cannot touch any wafer*, position the scanner head 1.75 in from the wafer. Be sure the top of the wafer is level with the top of the scanner head. Make sure the R-axis Offset in the Robot Parameter File is set to 0, as explained in the introduction to this procedure.

9. Press Enter. The Teach Pendant displays the message "DO YOU WANT TO CALIBRATE? Y/N". Press Y. The robot will run the **TSCN** macro and stop.

10. Press `CTRL+X` to exit from Teach Mode.

11. Run **MAP Station** where the station is the one you just taught.

Artisan Technology Group - Quality Instrumentation ... Guaranteed | (888) 88-SOURCE | www.artisantg.com

12. When the scan finishes, enter **RSS**. Verify that the results correctly reflect the position of the wafers within the cassette.

13. Enter **RSA**.

14. Enter **SAV**.

Teaching the Scanner in Special Situations

There can be instances when you cannot use the previous method. If the preceding instructions do not work for you and one of the following situations is true, use the information on this page:

- The cassette is mounted in a position such that the robot arm cannot extend to a point where the sensor can touch the wafer.
- The sensor cannot reach the first slot due to an obstacle.

If the sensor cannot touch the first wafer, but can touch another wafer in a different slot, calculate the offset using the following formula:

Z-axis Offset = 320 – [(Sn –1) * Pitch / 10]

Where:
Sn = Slot number used for teaching.
Pitch = Pitch of the cassette.

For example: If slot #3 is the lowest slot the sensor can reach and you are using 200 mm wafers, the equation is 320 – [3 – 1) *2500 / 10] = 180. In this case, edit parameter file line 24 to read 1, 1750, 180.

If the sensor cannot reach any wafer, but it does reach within 1.75″ of a wafer, change the offset value for the R-axis to zero. Follow the instructions in the preceding scanning procedure with these changes:

- Measure and move the sensor to the 1.75″ focal distance from the wafers.
- Slide out the wafer in slot #1 so you can move to the correct Z-axis position.

Artisan Technology Group - Quality Instrumentation ... Guaranteed | (888) 88-SOURCE | www.artisantg.com

Robot Parameter File

The robot parameters are stored in the *.par file. This file defines the robot parameters for the controller. Below is an example parameter file, annotated to show the line locations of the parameters. Your parameter file might have different values.

Note that most parameters list three values. The first value for the T-axis, the second value is for the R-axis, and the last value is for the Z axis. For example, when the T axis is homed, a speed of 100 is used, but when the R axis is homed, a speed of 50 is used.

ATM-1111	Serial number of the robot
9600	Baud rate
100,50,20	Home speed
1000,400,50	Home acceleration
2000,2000,2000	Encoder resolution
0,0,0	Reserved - Not used
4300,3000,2000	Operational speed
10025,10012,14012	Operational acceleration
200,200,300	**ER**, Error limit or following error
50000,30000,40000*	**GN**/**KP**, Proportional gain
0,0,0*	**FA**, Servo acceleration forward
4000,4000,4000*	**KI**, Integral gain or Response to error
9999,9999,9999*	
160000,120000,160000*	**ZR**/**KD**, Derivative gain
16896,16896,16896	Ramp value, controls radius of the S-curve
0,-4500,0	Customized home position
0,-31432,0	Home offset in encoder counts
9000,16775,3937	Mechanical ratio used in scaling
0,10460,0	Arm length, total of both arm links for R
4,1500,0	Parameters for optional Z-axis brake
1044,499,63	Operational deceleration
-1000,-10460,-1000	Negative software motion limit
36000,10460,13200	Positive software motion limit
0,0,0	Scanner offset
0,0,0	Reserved - Not used

*For firmware earlier than 6.0, these PID parameter values can differ:

50,30,40	**GN**, Proportional gain
0,0,0;	**FA**, Servo acceleration forward

Artisan Technology Group - Quality Instrumentation ... Guaranteed | (888) 88-SOURCE | www.artisantg.com

4,4,4	**KI**, Integral gain or Response to error
9999,9999,9999	**TL**, Torque limit
160,120,160	**ZR**, Derivative gain or Damping element

Some parameters, such as the Customized home position, are set when you teach the station positions. You can reset other parameters, such as speed and acceleration with commands. You can also change parameters by editing the parameter file; refer to the *Smart Controller Hardware and Software User's Manual*.

Adjusting Robot Parameters

When your robot system is delivered, the robot parameter file contains recommended parameter settings. It is unlikely that you will need to change any parameters. However, your specific use may suggest that you use a faster or slower operational speed, or you may want to change the ramp value to provide a smoother S curve.

To change robot parameters, such as speed or acceleration, send the command to set the new value in Terminal Mode. Then save the new value in NVSRAM by sending the **SAV** command.

The commands for changing the robot parameters are summarized in the following table. For more information on each command, refer to the *Smart Controller Hardware and Software User's Manual*.

Table 6-2: Commands for Changing Robot Parameters

Parameter	Command to read	Command to set
Home acceleration (.01 in / sec2) Note that **RAD** returns home acceleration only if homing is in progress. Otherwise, **RAD** returns operational acceleration	**RAD**	None
Operational acceleration	**RAD**	**SAD**
Operational speed	**RSP**	**SSP**
Operational deceleration	**RDL**	**SDL**
Servo error limit	**RER**	**ER**
Positive software limit switch	**RPSL**	**SPSL**
Negative software limit switch	**RNSL**	**SNSL**
Ramp slope	**RRM**	**RM**

Artisan Technology Group - Quality Instrumentation ... Guaranteed | (888) 88-SOURCE | www.artisantg.com

Flipper End Effector

For 6.0+ firmware, the Flipper is controlled as the W axis. The parameter values for the W axis are stored in the first column of the Auxiliary Parameter File (AUXxxxx.par file).

For firmware prior to 6.0, the Flipper is the t axis in a 4-axis system, and the W axis in an 8-axis system. The t values are stored in the first column of the PRExxxx.par file. The W values are stored in the first column of the AUXxxxx.par file.

To customize the motion control for the flipper end effector, you use Galil commands to define positions for the flipper axis. You can issue Galil commands from either the EQT interface or the Teach Pendant.

Before you begin teaching the Flipper, ensure that it is offset from 0 degrees to about 90 degrees.

Accessing Galil Mode

The flipper is controlled by the first Galil card. To access Galil mode for the first Galil card, from the Terminal mode, enter:

```
GALIL
```

A semi-colon (:), the Galil prompt, is displayed. You enter all Galil commands in UPPER CASE. Use commas to separate parameters. Spaces are optional. The first two letters of the command represent the function; additional letters represent an axis or a coordinated sequence. In the commands used for setting up the flipper, the W indicates the W axis.

To exit from Galil mode, press `CTRL+I`.

Finding the Home Switch

Enter Galil commands in the following order to find the edge of the home switch for the W axis.

Table 6-3: Galil Commands to Find the Edge of the Home Switch for the W Axis

Enter:	To:
SH W	Servo Here for the W axis
FE W	Find Edge of Home Switch

Artisan Technology Group - Quality Instrumentation ... Guaranteed | (888) 88-SOURCE | www.artisantg.com

Table 6-3: Galil Commands to Find the Edge of the Home Switch for the W Axis

Enter:	To:
`BG W`	Begin motion for W axis. Wait for the motion to complete.
`RP W`	Read Reference Position for the W axis
`DP ,,,0`	Define Current Position of the W axis as 0

Applying Tension to the Spring

Find the motor position that will apply enough tension to the flipper spring so it is held in a level position against the mechanical stops. From the current position, you add tension in increments of 50 or 100 steps. The number of steps should not exceed 400.

Use the PR command to specify a move a number of steps, the BG command to begin the motion, and the **RP** command to read the final position, which should be less than 400.

Table 6-4: PR Comman to Specify aMove of a Numbe or Steps

Enter:	To:
`PR ,,, 100`	Position Relative Move axis from current position for 100 steps
`PR ,,, 50`	Position Relative Move axis from current position for 50 steps
`BGW`	Begin motion for the W axis
`RPW`	Read reference (current) position for the W axis

Continue to add steps and test spring tension and level until it is satisfactory. Use the **RPW** command to verify that the number is less than 400. Edit line 17 of the Auxiliary Parameter File and make your **RPW** value the home offset for W.

Defining the Flip

To find the number of steps required for the Flipper to complete a 180° flip and apply enough tension to the spring, follow these steps. For a 90° flip, follow these steps, but use a smaller increment.

1. To redefine the current position as 0, enter:

   DP,,,0

Artisan Technology Group - Quality Instrumentation ... Guaranteed | (888) 88-SOURCE | www.artisantg.com

2. To position the axis 5000 steps from the move position and then move the flipper, enter:

   PR,,,5000
   BGW

3. Until you have enough tension, add steps in 50 or 100 increments, using either **PR,,,50** or **PR,,,,100.**

4. When the tension on the spring is enough, read the reference position for the W axis. The reference position is the number of pulses required to complete a 180 degree flip and should not exceed –5800. Enter:

   RPW

5. Write down the number. You will save the number to the station coordinate file in the next step.

6. Exit Galil mode by pressing `CTRL+I`.

Saving the Positions

You set coordinate special items (**SCSI**) for each station that you teach. Special items are numbered 0 through 15; flipper values use item numbers 13 (R position before a flip), 14 (number of flip pulses), and 15 (flipping position, homed or inverted).

The following examples are for Station A.

1. Using the results from your **RPW** command, enter the number of steps for 180-degree flip into the Coordinate Special Item #14. For example:

   SCSI A, 14, -5500

2. Set the position where R should move before a Flip. In this example, R will move to position 3000 before a flip:

   SCSI A, 13, 3000

3. For the flipper to be in the homed (upright) position, set Coordinate Special Item 15 to 0. For the flipper to be in the Flip (inverted) position while moving to a taught station, set Item 15 to 123. In this example, all **Get** and **Put** commands are completed in the inverted position.

   SCSI A, 15, 123

4. The **SCSI** command stores the value in the station coordinate (*.cor) file. To read back a value, use the **RCSI** command. For our example, **RCSI A,13** reads

Artisan Technology Group - Quality Instrumentation ... Guaranteed | (888) 88-SOURCE | www.artisantg.com

back 3000.

Testing the Flipper

Test the flipper using the following macros.

Table 6-5: Macros to Test the Flipper

Enter:	To:
`IFLIP 0`	Move the Flipper to the 0 degree position
`IFLIP 123`	Move the Flipper to the 180 degree position

Artisan Technology Group - Quality Instrumentation ... Guaranteed | (888) 88-SOURCE | www.artisantg.com

This Page Intentionally Left Blank

Artisan Technology Group - Quality Instrumentation ... Guaranteed | (888) 88-SOURCE | www.artisantg.com

7 Adjustments and Calibration

Overview

This chapter provides complete adjustment and calibration directions for the Brooks Automation Atmospheric Single-Arm Robot.

Chapter Contents

Atmospheric Single-Arm Robot Alignment 7-2
Required Tools and Test Equipment. 7-2
Alignment Strategy 7-2
Alignment Process 7-3
Leveling the Atmospheric Single-Arm Robot 7-4
Adjusting the Vacuum Sensor 7-4

Flipper Setup 7-6
Setting up the Flipper 7-6

Tuning PID Motor Parameters. 7-9
To tune the PID 7-9

Robot Radial Home Flag, Index, and Offset Adjustments. 7-11
Tools and Equipment 7-11
To Adjust the Physical Position of the Home Flag:. 7-11
To Check and Adjust the Physical Position at the Index Position 7-13
To Set the Home Offset 7-14

Artisan Technology Group - Quality Instrumentation ... Guaranteed | (888) 88-SOURCE | www.artisantg.com

Atmospheric Single-Arm Robot Alignment

The Brooks Automation Atmospheric Single-Arm Robot must be aligned with the system that it will be operating in. Note that even a small misalignment can interfere with proper system operation.

The user must perform the following alignment procedure as part of installing the product in a system, during routine maintenance, or when one of the system modules requires replacement. Brooks Automation recommends an alignment check under the following circumstances:

- A complete alignment when the Atmospheric Single-Arm Robot is first setup at the user's site.
- A complete check when the components of the robot or the robot itself is replaced.
- A complete check if the product was involved in a wafer transfer error.
- A complete check if the product was involved when an Emergency Machine Off (EMO) occurred.
- A partial check whenever any component in the system is replaced.
- A complete check of the robot if it was involved in a collision.

Required Tools and Test Equipment

Performing the alignment procedure requires the following tools and materials:

- Standard hand tools
- Teach pendant
- A computer running a terminal emulator or a dumb terminal
- A test wafer of the correct size for which the system is being set up
- The user's manual(s) for any devices the product will interface with

Alignment Strategy

The alignment is performed to ensure proper equipment operation and precise wafer transport within the user's system. The teach pendant or a Terminal Emulator, and the command set described in Chapter 8: *Command Reference* will be used during the performance of the Alignment Procedure.

Artisan Technology Group - Quality Instrumentation ... Guaranteed | (888) 88-SOURCE | www.artisantg.com

CAUTION

A thorough alignment protects against equipment damage and misaligned or sliding wafers.

CAUTION

There are no safety interlocks available while using the product's teach pendant or command set. The user is responsible for any damage to the Atmospheric Single-Arm Robot or their system as a result of using the teach pendant incorrectly.

Alignment Process

A complete and accurate alignment ensures that no part of the robots or of any wafer contacts any of the product's systems.

DANGER

The possibility of automatic movement of systems within the Atmospheric Single-Arm Robot exists. These systems have no obstruction sensors and may cause personal injures.

To ensure accuracy and repeatability do NOT "home" the product, or any of its subsystems, during the alignment procedure unless specificly directed to do so.

It is crucial that the alignment is performed in the sequence shown in this section for maximum operating performance of the Atmospheric Single-Arm Robot. Prior to beginning the alignment procedure, ensure the following stepshave been completed.

Prior to beginning the alignment procedure, verify the following:

1. Read and understand Chapter 2: *Safety*.

2. Become familiar with the safety warnings and the procedures to ensure safety while performing the procedures.

3. Become familiar with all attached subsystems, and the User Interface/teach pendant.

Artisan Technology Group - Quality Instrumentation ... Guaranteed | (888) 88-SOURCE | www.artisantg.com

4. Ensure the system is at room temperature.

5. Power up and initialize the Atmospheric Single-Arm Robot.

6. Follow the alignment procedures provided in this section in the order presented. Note that this section provides a detailed overview of the alignment process, which will reference the actual procedures as required.

Leveling the Atmospheric Single-Arm Robot

Adjustable feet are provided on the Atmospheric Single-Arm Robot. These feet are used to support the product, to compensate for an uneven floor, and to relieve the wheels. Refer to Installation Procedure on page 3-6 for complete installation information.

NOTE: *It should not be necessary to level the Atmospheric Single-Arm Robot unless this is a new installation.*

Adjusting the Vacuum Sensor

An SMC Series ZSE2-T1-15 vacuum sensor is installed in the lower arm link of the robot. If you have two end effectors, you have two vacuum sensors.

The functioning range of this sensor is from 0 to –30 in. Hg (0 to 101592 Pa). The robot vacuum sensor is set for detecting silicon wafers at –15 in. Hg (50796 Pa). If you use a stronger or weaker vacuum supply, you can adjust the sensor as follows:

1. Remove the cover to the lower arm link by unscrewing the screws that attach the arm cover to the arm. The sensor has a yellow potentiometer with High (H) and Low (L) marked above it. You will need a small screwdriver to turn the potentiometer.

2. Connect the vacuum line.

3. Install the end effector.

4. Open the vacuum valve using the EQT interface or by entering a command. For a single end effector or the first end effector, enter:

```
OUTP 0,0
```

5. Without a wafer on the end effector, turn the potentiometer counter-clockwise until the red LED lights. Consider this position A.

Artisan Technology Group - Quality Instrumentation ... Guaranteed | (888) 88-SOURCE | www.artisantg.com

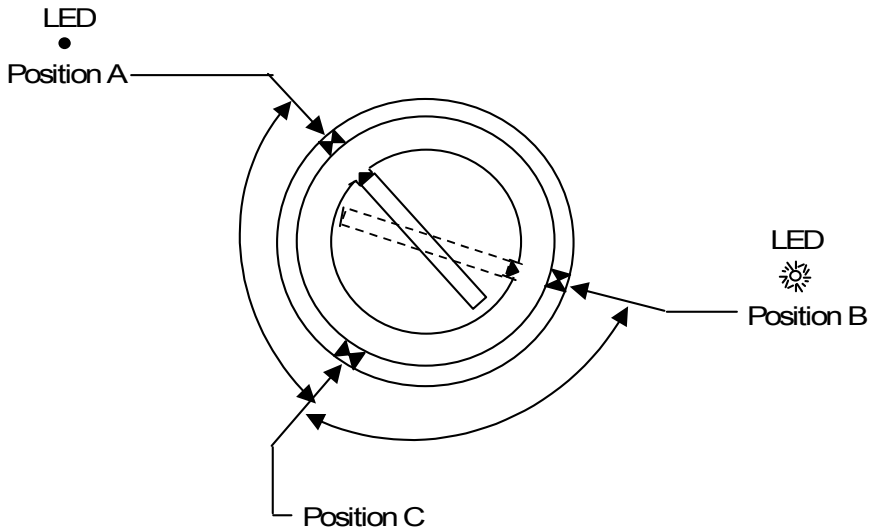

Figure 7-1: Vacuum Sensor Potentiometer

6. With a wafer on the end effector, turn the potentiometer clockwise until the LED is turned off. Consider this position B.

7. Turn the potentiometer to a position midway between position A and position B.

8. Turn off the vacuum to the end effector using the EQT interface or with the command:

```
OUTP 0,1
```

9. If you have a dual end effector, tune the second vacuum sensor. To turn on the vacuum, use the command:

```
OUTP 1,0
```

10. To turn off the vacuum, use the command:

```
OUTP 1,1
```


Artisan Technology Group - Quality Instrumentation ... Guaranteed | (888) 88-SOURCE | www.artisantg.com

Flipper Setup

This procedure provides information about how to set up a stepper flipper on a Brooks Automation ATM or ABM robot.

Setting up the Flipper

1. Before you set up the flipper in Galil mode, be sure that the flipper is offset to about the midpoint of its travel.

2. From terminal mode, type "**GALIL**" to enter into Galil mode from the host computer or Teach Pendant. Galil mode should respond with a ":" at which you may enter Galil commands. Later, to exit from Galil mode type `CTL I`. Enter the following commands to find the home switch. The semicolon indicates comments.

Table 7-1: Galil Commands to Find the Home Switch

:SHW	; Servo Here W-Axis.
:FEW	; Find Edge of Home Switch.
:BGW	; Begin motion for W-Axis.
:RPW	; Read Reference Position for W-Axis.
:DP ,,,0	; Define Current Position as 0.

3. After the Home switch is found, determine the number of steps you need to apply enough tension to the spring so that it is held in the level position against the mechanical stops. Enter:

:PR,,, 100	; Position Relative Move axis from current position this number of steps (here the number of steps = 100
:BGW	; Begin motion for W-Axis.

4. Test the spring tension. If there is not enough tension, add steps in increments of 50. Use the commands that follow:

:PR ,,, 50	; Position Relative Move Axis from current position this number of steps.
:BGW	; Begin motion.

5. Test the spring tension. If there is not enough tension, repeat the procedure of adding steps, in increments of 50 (previous step), until the desired tension is

Artisan Technology Group - Quality Instrumentation ... Guaranteed | (888) 88-SOURCE | www.artisantg.com

achieved.

```
:RPW                    ; Read reference position for W-axis
```

6. The negative of the number displayed after the **:RPW** command must be inserted as the Theta Home Offset position in line 17 of the flipper parameter file.

   In some cases (depending on the firmware) it may be required that this number be inserted as a positive number. If the sign of the number is incorrect, it will become apparent once the flipper is homed, as the flipper will move away from the hard stop instead of towards it. This number should not exceed 400.

7. The next step is to determine the number of steps required for the flipper to complete a 180-degree flip and apply enough tension to the spring. (The same procedure applies to 90-degree flippers, except the required number of steps will obviously be smaller.)

```
:DP ,,,0                ; Redefines the current position as 0.

:PR ,,,-5000            ; Position Relative Move Axis from the current posi
                          tion this number of steps.

:BGW                    ; Begin motion for W-Axis.
```

8. Test the spring tension. If there is not enough tension, add negative steps in increments of 50 or 100, depending on how far it is from the desired position.

```
:PR ,,, -50             ; Position Relative Move Axis from current position
                          this number of steps.

:BGW                    ; Begin motion.
```

9. Test the spring tension and flipper level. Again, repeat the procedure of adding steps until the desired tension on the spring is achieved. When there is enough tension on the spring , type:

```
:RPW                    ; Read Reference Position for W-Axis. This will be the
                          number of pulses required to complete a 180-degree
                          flip.

CTRL+I                  ; Exit Galil mode
```

10. Enter the number of steps for 180-degree flip into the Coordinate Special Item #14 by typing the command

Artisan Technology Group - Quality Instrumentation ... Guaranteed | (888) 88-SOURCE | www.artisantg.com

`>SCSI A,14, [ result of RPW ]` ; Set the number of flip pulses. This should not exceed–5800.

11. Set the position that R should move to before a Flip. This is stored in coordinate special item #13.

    `>SCSI A,13,-4000` ; This will cause R to move to –4000 before Flip.

12. The Flip position for each station that you teach must be specified. If you wish the end effector to be in the 0 position you must set the Coordinate Special Item #15 for the station you are teaching to 0. If you wish the end effector to be in the Flip position while moving to a taught station you must set the Item to 123.

    `>SCSI D,15,123` ; This will cause all Get and Put commands for Station D to be completed with the end effector in the 123 (Flip) position.

13. Test the flipper using the following commands:

    `IFLIP 0` ; Move Flipper to the 0 degree position.

    `IFLIP 123` ; Move the Flipper to the 180 degree position.

Artisan Technology Group - Quality Instrumentation ... Guaranteed | (888) 88-SOURCE | www.artisantg.com

Tuning PID Motor Parameters

This procedure helps you set the PID parameter tuning for any robot and track system with a servo motor. While the robot goes to the commanded position, its motion is controlled by a number of parameters. If the parameters are not tuned properly, there is unwanted movements in the robot or the robot stops suddenly.

Several factors affect the motion of the robot. Among them, PID factors are the most significant ones.

The PID filter is a combination of three functions.

Brooks Commands	Galil Commands	Property
`GN`	`KP`	Proportional gain
`KI`	`KI`	Integrator
`ZR`	`KD`	Damping (or Derivative)

`KP` is the proportional element (KP) of the filter and acts as gain. GN is Brooks Automation's equivalent command.

`KI` is the integrator function (**KI**) represented by the parameter **KI.** It improves the system accuracy. With the **KI** parameter, the motor does not stop until it reaches the exact desired position, regardless of the level of friction or opposing torque. The integrator also reduces or decreases the system stability. Brooks Automation uses the same command, **KI**.

`KD` is the damping element (**KD**) of the filter. It reduces the delay associated with the motor response. The delay in the servo system is between the application of the current and its effect on the position. Brooks Automation uses the **ZR** command.

After you set up the system, you need to tune PID.

To tune the PID

1. Set **KI** to 0.
2. Set **KP** (**GN**) to 1.
3. Set **KD** (**ZR**) to 100. (**KD** maximum = 4095)

Artisan Technology Group - Quality Instrumentation ... Guaranteed | (888) 88-SOURCE | www.artisantg.com

4. Increase **ZR** gradually and stop after the motor vibrates. A vibration is noticed by audible sound or by signal responses.

5. In the Galil mode, check for an error by typing **TE**.

6. Increase **GN** gradually. (GN maximum = 1023). The motor may vibrate if the gain is too high. In this case, reduce **GN**. **GN** should not be greater than **ZR**/4.

7. In the Galil mode, check the error again by typing **TE**. The value of **TE** should be reduced.

8. Turn on and home the motor.

9. Move the motor by the commands like **MOVA/R**. You might notice that the motor does not go to the exact position that you expect.

10. Increase **KI** to somewhere in between 3 to 5.

11. Move the motor again and check whether the motor moved to the position you expect.

12. If the motor moves to exact position you want it and does not vibrate, and the system does not jerk while it moves, the PID settings are complete.

The values are not the same on different machines and does not remain permanent on a given machine. Also when the weight of the object to be carried by End effector changes, it can affect on the movement of the robot.

Artisan Technology Group - Quality Instrumentation ... Guaranteed | (888) 88-SOURCE | www.artisantg.com

Robot Radial Home Flag, Index, and Offset Adjustments

This procedure explains the processes required to properly set the required position of the R-axis home sensor. If the location of the home sensor may require adjustment of the index and offset values.

You would want to change the physical position at the home flag for the following reasons.

- A new robot is being installed and the R-axis home sensor flag position needs to be set.
- A robot requires the R-axis home switch position to be modified. This can occur if the robot is being changed from a single end effector configuration to a dual end effector configuration or the reverse.
- If the R-axis home sensor flag position has been moved from its correct position due to mishandling of the unit or by mechnical failure.

Adjust the index and offset values any time they are out of specifications. This procedure is designed to be used only by a certified technician with a working knowledge of Brooks Automation's hardware and diagnostics

Tools and Equipment

- ATM or RPD robot
- ESC-100 or ESC-200 Smart Controller
- Teach pendent or PC with EQT software and RS-232 cable.
- Small Phillips screwdriver
- Hex key set
- Tape measure or ruler (unless center overlapping position is used)

To Adjust the Physical Position of the Home Flag:

1. Determine the desired position of the physical home flag for the robot radial axis. Refer to the COC or customer specifications.

2. Home the robot.

3. Turn the radial servo OFF. Physically position the arm (Figure 7-2) to the measured or desired distance describe in Step #1.

Artisan Technology Group - Quality Instrumentation ... Guaranteed | (888) 88-SOURCE | www.artisantg.com

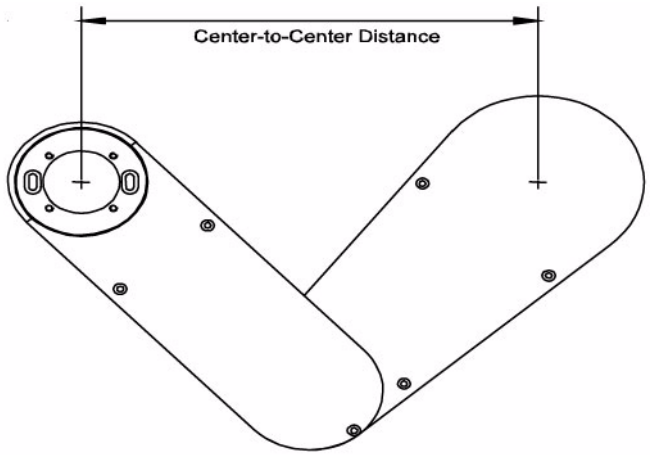

Figure 7-2: Center to Center Distance

4. Lock arm into place by turning the radial servo to ON.

5. To gain access to Z Bracket that attaches to the "R" Flag, Command the "Z" Axis to half its travel by issueing the command **MOVA Z,#####** and servo OFF the Theta servo.

6. Loosen the two set screws that are on the Z bracket 90 degrees apart. This allows movement of the Home Flag.

7. Open Diagnostics STEP #4 (LIMIT & HOME TEST) on page 9-35. This will help display the toggling of the radial home switch.

8. Physically move the position of the Home Flag to a location were the home switch toggles.

9. Tighten the two screws on the Z bracket.

10. Home the robot

11. Recheck this adjustment by:

    1. Typing **MOVA R, 0,** to move the arm to the center over center position.If it does not move to this position the Offset position must be set.

    2. Type **RETH** to move the arm to the measured distance in Step #1of this procedure, if Customer Home Position in the parameter file for radial is set for Zero.

Artisan Technology Group - Quality Instrumentation ... Guaranteed | (888) 88-SOURCE | www.artisantg.com

To Check and Adjust the Physical Position at the Index Position

1. Go to Robot Diagnostic STEP #8 (HOME TEST & SET) on page 9-36. Select the Radial option to move the robot to the Radial index.

2. The display shows the Index Position for each Radial axis. If the resulting Index value is not within these limits, the software will require adjustment of the index position.

NOTE: *For 100, 200 and 300 series robots, the proper index range is between 1000 and 3000. For 400, 500 and FPD series robots the proper index range is between 2000 and 6000.*

3. Remove the robot side access panel.

4. The software will prompt you "Move Radial Axis to Good position". This means two things:

   1. Move the theta axis to a position for best access to the radial motor

   2. Restrain the arm into a COP position and then press Enter. Refer to Figure 7-3.

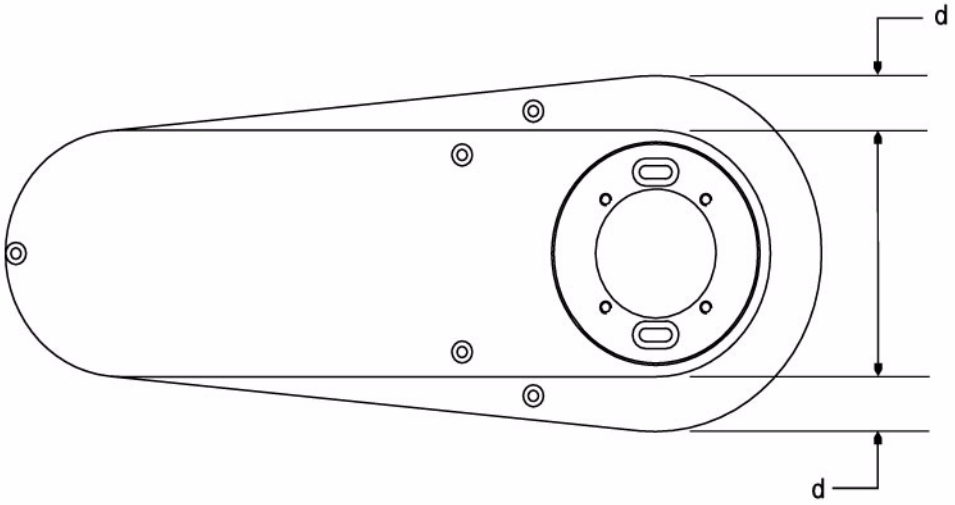

Figure 7-3: Center Overlapping Position (COP)

5. The software sends response "Lock R Axis and Release the Belt". The Radial motor servos on.

Artisan Technology Group - Quality Instrumentation ... Guaranteed | (888) 88-SOURCE | www.artisantg.com

6. Loosen the 2 bolts (4 bolts for ATM 400 series robots) holding the R-axis motor assembly to the Transmission Plate and remove the belt.

7. Press `Enter` when you complete step 6 of this procedure. The motor will move to an acceptable R Index position. The software response is "Correction Done Replace the Belt".

8. Replace the belt and tighten the radial motor screws while apply appropriate amount of tension to the belt. Press `Enter` when done.

9. Repeat STEP #8 (HOME TEST & SET) on page 9-36 to verify proper index is achieved.

To Set the Home Offset

1. Open the diagnostics step, STEP #8 (HOME TEST & SET) on page 9-36. Select the Adjust R Offset option. The robot moves to find the INDEX and then to OFFSET position, this location is also Zero for the Radial Axis.

2. When prompted Is the offset correct, click NO to servo off the radial motor.

3. Do the Home Offset correction by moving the Radial arm links center over center as shown in Figure 7-3.

4. After completing this diagnostic step, select OK.

5. Escape from the diagnostic screen to the terminal mode. Type SAV to save the Offset into the parameters file.

Artisan Technology Group - Quality Instrumentation ... Guaranteed | (888) 88-SOURCE | www.artisantg.com

8 Command Reference

Firmware Revision 6.0

Overview

This chapter provides an overview of the embedded control software for the Brooks Automation Atmospheric Single-Arm Robot. The control software provides a broad range of command options, including a number of sophisticated, integrated command sequences. Communications between the Atmospheric Single-Arm Robot and the host controller uses standard EtherNet communications for normal operation or RS-232 communications for setup and test to access all product software commands.

The command reference in this manual reflects the version of the firmware indicated above. Any previous version of firmware may not provide the full command set and functionality as stated in this chapter.

Chapter Contents

Description 8-2

Commands and Macros for Robots. 8-4
Coordinate File 8-4

Artisan Technology Group - Quality Instrumentation ... Guaranteed | (888) 88-SOURCE | www.artisantg.com

Description

The Brooks Automation Atmospheric Single-Arm Robot provides a command set that allows complete control of all product functions. These commands provide a broad range of command options, including a number of sophisticated integrated command sequences.

When axis parameters such as speed, acceleration, or current position are listed or modified by software commands, the parameter values for the three axes are always listed in the order T, R, Z.

To issue commands, define each station with a one-character name or letter. For example, the robot might get a wafer for Station A and put it in a cassette named Station B. Station names can be any upper or lower case letter. It is helpful to use a naming convention that suggests the function or location of the stations. For example, all upper case station names (A to Z) might be cassettes and all lower case station names (a to z) might be stands.

For a cassette station, you need to teach only the first wafer slot. The controller will use the pitch for each station to determine the distance between slots in the cassette.

Software Control

The Equipe Smart Controller (ESC) contains the firmware on EPROMs. The macro, coordinate, parameter, and optional pre-aligner files are stored on NVSRAM. Your robot is delivered with the files stored in NVSRAM on the controller; backup files are supplied on a diskette.

The software stored on the EPROMs contains the basic commands and logic for interpreting commands or macros sent from the Teach Pendant or EQT 32. A macro is a set of commands that perform an operation on the system. The firmware interprets and executes the macros. You can edit a macro, but you cannot change the firmware.

Macros

A macro can be written to home the robot, align a wafer, get a wafer from a station, or put that wafer in a cassette. In addition to the macros that OEM Systems writes for you, you can write macros using the Equipe macro language and commands. Refer to the Software and Controller Manual for instructions on writing macros.

A macro can initiate robot movement to any station and cassette slot, because the coordinates for stations are defined and stored in a file. A station is any location defined by a coordinate, composed of theta, radial, and vertical vertices.

Artisan Technology Group - Quality Instrumentation ... Guaranteed | (888) 88-SOURCE | www.artisantg.com

Coordinate File

The coordinate, or station, file contains the T-R-Z coordinates for stations and cassette slot information. The Coordinate File contains up to 52 stations, A through Z and a through z. That is, you place the robot in a position or station that you want the robot to remember. You then teach the station coordinates by saving the coordinates for that position or station in the Coordinate File (*.cor) stored in NVSRAM.

For more information on teaching, refer to the chapter on Operating and Teaching.

Robot Parameter File

The robot parameters are stored in the ATMxxxx.par file or ABMxxxx.par file, where xxxx is the four-digit serial number. The parameter file that is delivered with your robot contains parameters set for your particular robot and application. You will not need to change them unless you have special circumstances.

Artisan Technology Group - Quality Instrumentation ... Guaranteed | (888) 88-SOURCE | www.artisantg.com

Commands and Macros for Robots

You operate the robot directly with commands or macros. The commands are documented in the *Smart Controller Hardware and Software User's Manual*. Except for a few standard macros, macros are system-specific. To review your macros, use any text editor to view the macro file (*.mac) delivered on diskette with your system.

To send a command or macro, type the command or macro name at the Terminal mode prompt and press the `Enter` key. For example, to turn on the servo motor for the Z axis, enter:

```
SVON Z
```

Here's a short list of useful commands and macros. For axis, use a single robot axis (T, R, or Z), or upper-case A, where A is all robot axes. Note that the lower-case a indicates all pre-aligner axes. For position parameters, list the value in mils. **Commands are case sensitive**.

Table 8-1: Short List of Useful Commands and Macros

Command or Macro	Example	Comment
LMCR	**LMCR**	Lists all macros in NVSRAM.
LMCR *name*	**LMCR HOM**	Lists all lines in one macro.
MOVA *axis, position*	**MOVA Z, 6000**	Move absolute. This moves the robot 6 inches from the zero (0) position.
MOVR *axis, position*	**MOVR Z, 900**	Move relative. Moves the specified distance from the current position.
STOP *axis*	**STOP A**	Stop all robot movement.
SVON *axis*	**SVON A**	Turn on the servo motors for all axes.
SVOF *axis*	**SVOF Z**	Turn off the servo motor for the Z axis.

Coordinate File

The coordinate file contains station coordinates and cassette slot information. You can define up to 52 stations (named A through Z and a through z). You place the robot in a position (station) you want the robot to remember. When you teach the station to the robot, the coordinates are saved for that station in a coordinate file (*.cor)

Artisan Technology Group - Quality Instrumentation ... Guaranteed | (888) 88-SOURCE | www.artisantg.com

stored in NVSRAM.

For stations that are cassettes, teach the location of the first slot in three coordinates, and the pitch, or distance between each slot. From that, the controller calculates the coordinates for any slot. For the macro **`GET A, 9`** the robot moves to Station A and gets the wafer from the ninth slot.

In the following annotated coordinate file, all required lines are shown for Station A. An ellipsis (…) indicates where lines are omitted for other stations. Note that T, Theta, is expressed in centidegrees (.01°). R and Z are expressed in millionths of an inch (0.001 in).

`SPC A,25495,10233,2891`	Station A coordinates T, R, and Z
`SOF A,50`	Offset
`SST A,80`	Stroke
`SRET A,-5500`	R-axis retract position
`PITCH A,2500`	Distance between cassette slots
`SPSC A,7344,-12617,2831`	Scanning coordinates
`SCSI A,0,50`	Parameters for scanning
`SCSI A,1,250`	Parameters for scanning
`SCSI A,2,5000`	Parameters for scanning
`SCSI A,3,5000`	
`SCSI A,4,5523`	Parameters for scanning
`SCSI A,5,2586680`	Parameters for scanning
`SCSI A,6,5000`	Parameters for scanning
`SCSI A,7,1993`	Parameters for scanning
`SCSI A,8,25`	Parameters for scanning
`SCSI A,9,75177`	Data for track position
`SCSI A,10,3`	Reserved - Not used
`SCSI A,11,0`	Reserved - Not used
`SCSI A,12,0`	Reserved - Not used
`SCSI A,13,0`	Parameters for Flipper
`SCSI A,14,0`	Parameters for Flipper
`SCSI A,15,25`	Parameters for Flipper
`SPC B,25517,10269,2870`	Station B coordinates T, R, and Z
`SOF B,50`	Station B offset for stroke
…	
`SPC C,25320,10675,2887`	
`SOF C,50`	
…	

Artisan Technology Group - Quality Instrumentation ... Guaranteed | (888) 88-SOURCE | www.artisantg.com

This Page Intentionally Left Blank

Artisan Technology Group - Quality Instrumentation ... Guaranteed | (888) 88-SOURCE | www.artisantg.com

9 Maintenance

Overview

This chapter provides maintenance schedules and procedures for the Brooks Automation Atmospheric Single-Arm Robot. The first section of this chapter provides preventive maintenance schedules and procedures. The second section of this chapter provides repair procedures for subsystem repair and replacement.

Chapter Contents

Preventive Maintenance 9-2
Preventive Maintenance Schedule and Procedures 9-3
Cleaning. 9-4
Robot Leadscrew Lubrication Procedure 9-6
Vacuum Hose Replacement for the Outer Arm Link 9-11
Checking the Integrity of the Belts in the Robot 9-14
Diagnostics for the Single-Arm Robot 9-16
Using the Teach Pendant to Run Diagnostics 9-31

Artisan Technology Group - Quality Instrumentation ... Guaranteed | (888) 88-SOURCE | www.artisantg.com

Preventive Maintenance

This section provides procedures for routine preventive maintenance of the Atmospheric Single-Arm Robot to reduce unscheduled downtime. The Atmospheric Single-Arm Robot is designed to require very little routine maintenance. However, it is recommended that the preventive maintenance procedures and schedule provided in this section be followed to extend the operating life of the product and to minimize unscheduled downtime. If additional procedures are required, they will be supplied along with their maintenance schedules by Brooks Automation.

All Preventive Maintenance procedures and schedules provided here assume that the Brooks Atmospheric Single-Arm Robot is operating in a clean, dry, inert environment. Any deviation from this basic environment will affect the scheduling of PM and may also require additional PM procedures be performed. The user should adjust the Preventative Maintenance Schedule as appropriate to account for any deviations from this environment.

NOTE: *Brooks Automation offers training for troubleshooting and repair of the Atmospheric Single-Arm Robot. Only qualified, properly trained persons should perform any maintenance or repair procedures. Damage resulting from improperly performing a procedure is not covered under warranty or service agreements.*

Parts

Brooks Automation can provide all parts required for Preventive Maintenance. For a list of these parts, contact Brooks Automation Customer Support. To obtain additional information about parts for preventive maintenance, contact your local Brooks sales representative, or call Brooks Automation Customer Support at 978-262-2900 (24 hours a day, seven days a week).

Artisan Technology Group - Quality Instrumentation ... Guaranteed | (888) 88-SOURCE | www.artisantg.com

Preventive Maintenance Schedule and Procedures

The following maintenance schedule and procedures will provide the information required for standard user maintenance of the Brooks Automation Atmospheric Single-Arm Robot. Table 9-1 is provided as a quick reference to all scheduled maintenance. If additional procedures are required during the performance of any procedure, they will be provided. The frequency for performing the procedure is provided and the page number is provided for those procedures in this manual.

NOTE: *The following Preventive Maintenance Schedule is based on a certified clean, dry environment. The user should adjust the Preventative Maintenance Schedule to account for any deviations from this environment.*

WARNING

When equipment is off and power is secured per facilities lockout/tagout procedure, it is at a Type 1 category. When equipment is energized, live circuits covered, and work performed remotely, the Atmospheric Single-Arm Robot is at a Type 2 category. (Refer to Electrical Hazards on page 2-17).

Table 9-1: Preventive Maintenance Schedule

Procedure	Page #	Frequency
Cleaning	9-4	As required
Robot Leadscrew Lubrication Procedure	9-6	Once every 6 mo.
Replace the Vacuum Hose in the Arm Link	9-11	Annually
Check the Integrity of the Belts in the Robot	9-14	Annually

Artisan Technology Group - Quality Instrumentation ... Guaranteed | (888) 88-SOURCE | www.artisantg.com

Cleaning

Occasionally the product will need to be cleaned. This could be done as a part of normal servicing or to remove contaminates deposited on it from the process or other sources.

Required Tools and Test Equipment

- Isopropyl Alcohol (100%)
- DI Water
- Cleanroom Wipes

Cleaning Procedure

WARNING

The product may be used in an environment where hazardous materials are present, and surfaces may be contaminated by those materials. Refer to the facility's Material Safety Data Sheets for those materials to determine proper handling.

WARNING

Dispose of cleaning cloths per facilities procedures and local regulations.

1. Remove any hazardous materials from the product's surfaces following the facility's procedures for those materials.

2. Clean all exposed surfaces using cleanroom wipes moistened with isopropyl alcohol.

CAUTIONS

Wipe must be moistened only; squeezing the wipe should not cause any isopropyl alcohol to drip.

Do not allow alcohol to come in contact with bearings, seals, etc.

Artisan Technology Group - Quality Instrumentation ... Guaranteed | (888) 88-SOURCE | www.artisantg.com

3. Once all contaminants have been removed, use cleanroom wipes moistened with DI water to remove any residues.

CAUTIONS

Wipe must be moistened only; squeezing the wipe should not cause any water to drip.

Do not allow water to come in contact with bearings, seals, etc.

4. Once all residues have been removed, use dry cleanroom wipes to dry all surfaces.

Artisan Technology Group - Quality Instrumentation ... Guaranteed | (888) 88-SOURCE | www.artisantg.com

Robot Leadscrew Lubrication Procedure

Wear gloves when applying any of the greases to the particular component. Some grease may cause skin irritation. Oils and particles from the hand may also contaminate the grease you are applying.

Take care not to mix the greases mentioned because they are not compatible and catastrophic failure may occur.

MSDS sheets are provided to give you information on each of the greases used in our robots.

Tools Required Depending on your Robot

- Kuroda "C" type grease (P/N 10007-0360)
- LG2 grease (P/N 1007-0359)
- Castrol Braycote 803 "P" type grease (P/N 70033949)
- 6mm 45 degree angle "zerk" fitting (grease fitting)
- Grease gun
- Clean room compatible rubber gloves
- Lint free cloth

NOTE: *It is important to make sure you use this procedure to determine which leadscrew you have installed in your robot. This information will be used to determine which lubricant to use and the method you use to apply it.*

Removal of the robot to be lubricated

1. Power down the system.
2. Remove the robots signal and power cables from the robot.
3. Disconnect the vacuum hoses from the robot.
4. Remove the robot from the tool.
5. Move the robot to a work bench
6. Remove all screws that attach the access cover to the large cover.

Artisan Technology Group - Quality Instrumentation ... Guaranteed | (888) 88-SOURCE | www.artisantg.com

Determining which grease to use on your robot

For Kuroda "C" type grease (P/N 1007-0360)

You need to use Kuroda greas (P/N for ATM100, 1007-0062c). On the lead-screw you should see:

- The grease on the leadscrew is white or tan.
- "Kuroda" is printed on the bottom part of the leadscrew bearing nut.
- There is a black rubber plug on the purge port.

Procedure for lubricating with Kuroda grease:

1. Remove the black plug by carefully pushing the plug through with a small screwdriver.
2. Insert the tip of the grease syringe into the grease port and push the grease into the bearing nut until the grease purges out through the nylon retainer on the bottom of the bearing nut.
3. Re-insert the black plug into the grease port and clean off the excess grease.

For LG2 grease (P/N 1007-0359

You need to use LG2 grease on the robot for the ATM100 (1001-0062A), ATM200 (1001-0127), ATM300 and FPD (1001-0092), ATM400/ABM400 (1001-0096) or the FPD500 (1001-0093). On the leadscrew you should see:

- There is no visible markings on the leadscrew bearing nut.
- The purge port is filled in with solder.

Procedure for lubricating with LG2 grease:

1. Locate your 6mm 45 degree "zerk" fitting that is to be installed.

Artisan Technology Group - Quality Instrumentation ... Guaranteed | (888) 88-SOURCE | www.artisantg.com

Figure 9-1: Zerk Fittings

2. Locate the threaded hole in nut holder.

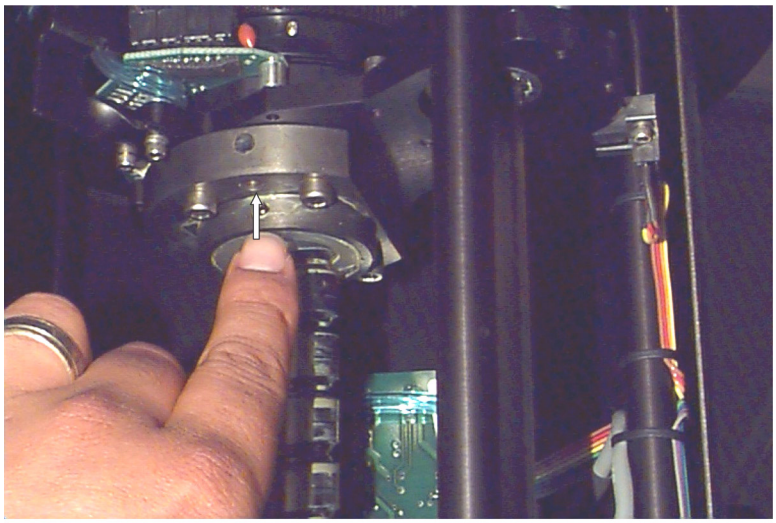

Figure 9-2: Hole in Nut Holder

3. Install "zerk" fitting on bottom of Bearing Nut.

Artisan Technology Group - Quality Instrumentation ... Guaranteed | (888) 88-SOURCE | www.artisantg.com

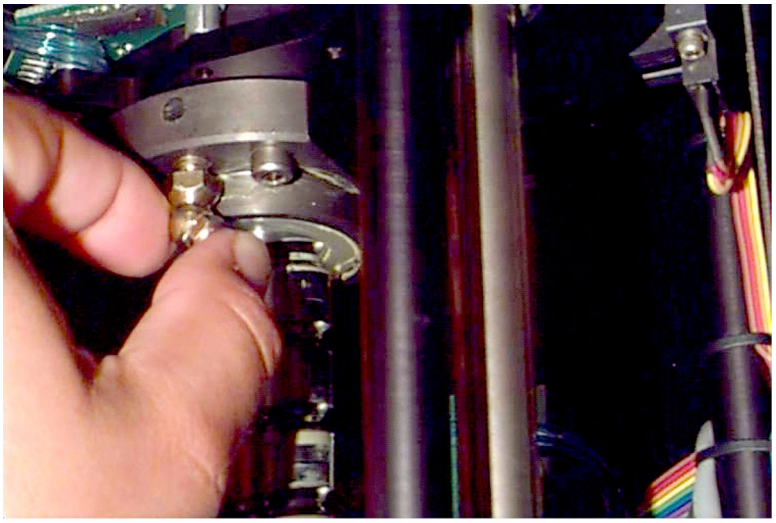

Figure 9-3: Zerk Fitting being Placed in the Threaded Grease Hole

4. Insure that the "zerk" fitting is positioned properly to allow clearance for the grease gun.

5. Using a grease gun, pump grease into leadscrew bearing nut until grease purges out through the nylon retainer in the bottom of the bearing nut.

6. Remove the "zerk" fitting and clean excess grease off the Leadscrew.

For Castrol Braycote 803 "P" type

You need to use Castrol Braycote 803 "P" type grease for ATM100 1001-0063. On the lead screw you shoud see:

- You see no visible markings on leadscrew bearing nut.
- The purge port is filled in with solder.
- You do see thick white grease on the Leadscrew.

Procedure for lubricating with Castrol Braycote 803 "p" type

1. Locate your 6mm 45 degree "zerk" fitting that is to be installed. (Figure 9-1 on page 9-8)

2. Locate the threaded hole in the nut holder. (Figure 9-2)

Artisan Technology Group - Quality Instrumentation ... Guaranteed | (888) 88-SOURCE | www.artisantg.com

3. Install "zerk" fitting on bottom of Bearing Nut.

4. Insure that the "zerk" fitting is positioned properly to allow clearance for the grease gun.

5. With a grease gun, pump grease into Leadscrew bearing nut until grease purges out through the nylon retainer in the bottom of the bearing nut. (fig.6 & 6.a)

6. Remove the "zerk" fitting and clean excess grease off Leadscrew.

When you have completed greasing the leadscrew install the access cover and be sure that the screws are tight. Then return the robot for use or store it in an appropriate location.

Artisan Technology Group - Quality Instrumentation ... Guaranteed | (888) 88-SOURCE | www.artisantg.com

Vacuum Hose Replacement for the Outer Arm Link

Required Parts and Tools

- Allen wrench set (standard)
- Phillips screw driver (#2)
- Long nose, needle nose pliers
- Blue vacuum hose (1 ft. length)
- Red vacuum hose (1 ft. length)

Procedure

To remove the robot from the tool:

1. Power down system.
2. Remove the signal and power cables from the Robot.
3. Disconnect the vacuum hoses from the Robot.
4. Remove the Robot from the tool.
5. Move the Robot to a work bench.

To remove the outer arm link end-effector and scanner hardware (if applicable):

1. Remove the Phillips head screw from the center of the scanner head. This screw is located directly in front of the "Avoid Exposure" label.
2. Locate and remove the two Flat head Allen screws that are located at the base of the scanner. These screw are holding the scanner to the scanner base.
3. Pull the scanner forward exposing the scanner connection. Disconnect the 4 pin connection and place the scanner in a safe place.
4. Inside the scanner base, locate the two hex head screws that fasten the clamp that holds the vacuum and scanner cables to the scanner base.
5. Remove the two hex head screws then remove the clamp and screws, placing them in a safe place.
6. Locate the four hex head screws that fasten the scanner base to the outer arm

Artisan Technology Group - Quality Instrumentation ... Guaranteed | (888) 88-SOURCE | www.artisantg.com

link.

7. Remove the four screws and housing, placing the base and screws in a safe place.

To remove the outer and inner arm link covers:

1. Locate the 3 Phillips head screws that fasten the cover to the outer arm link.

2. Remove the screws and arm cover placing them in a safe place.

3. Locate the 4 Phillips head screws that fasten the cover to the inner arm link.

4. Remove the screws and arm cover placing them in a safe place.

To remove the shaft feed through covers located underneath the arm links:

1. Locate the "T" shaped covers on both arm links, located underneath the connecting joints of both arm links.

2. Locate and remove the small Phillips head screws attaching the covers. Place the screws and covers in a safe area.

To remove the vacuum hose:

1. Locate and remove the two brackets in the outer arm link. The screws are cap head screws. Place brackets and screws in a safe place.

2. Locate and loosen the screws on the vacuum sensor. There is no need to remove the vacuum sensor from the robot.

3. Disconnect the vacuum line from the vacuum sensor. You will need to pry the vacuum hose off with some long nose, needle nose pliers.

4. Pull the vacuum hose through the hole in the inner link and then pull the hose through the shaft feed between the inner and outer link. Remove the hose from the robot and discard in an environmentally friendly manner according to local, state, and government regulations.

5. If there is a second vacuum hose, please repeat this section from step 3.

To install a new vacuum hose:

1. Thread a new vacuum hose through the arm links and attach it to the vacuum

Artisan Technology Group - Quality Instrumentation ... Guaranteed | (888) 88-SOURCE | www.artisantg.com

sensor. When installing the vacuum hose to the vacuum sensor make sure the hose loops around the stand-off to insure the hose does not kink.

2. If there is a second vacuum hose please repeat step 1.

3. Install the brackets and replace the screw holding the vacuum sensor in place.

4. Replace the feed through covers and tighten all hardware.

5. Check to make sure the vacuum hose does not rub or kink while exercising the motion of the arm. If the hose is OK, then continue by replacing the arm covers. If the hose kinks or rubs, orientate the hose correctly to insure that the hose does not touch anything.

6. Check all hardware to make sure there is not any loose screws.

7. Replace the scanner hardware.

Artisan Technology Group - Quality Instrumentation ... Guaranteed | (888) 88-SOURCE | www.artisantg.com

Checking the Integrity of the Belts in the Robot

Tools Required:

Phillips screw driver (#2)

Procedure for the Inspection of the Robot Outer Link

To remove the robot from the tool:

1. Power down system.
2. Remove the signal and power cables from the Robot.
3. Disconnect the vacuum hoses from the Robot.
4. Remove the Robot from the tool.
5. Move the Robot to a work bench.

To remove the access cover:

1. Remove all Phillips head screws that attach the access cover to the large cover on the can of the robot.
2. Place the cover and screws in a safe area.

To inspect the internal belts:

1. Locate the belts on the top portion of the transmission plate.
2. Inspect the belts to see if there is any obvious damage or dark discoloration to the belts.
3. Check to see if any of the belts are frayed or cut.
4. Locate the belts below the transmission plate and inspect the belts using steps 2 and 3.
5. Locate the belt on the outside tube that connects to the ball spline. This belt will rotate when the R-axis is moved. Inspect the belt using steps 2 and 3.

Artisan Technology Group - Quality Instrumentation ... Guaranteed | (888) 88-SOURCE | www.artisantg.com

To re-install the access cover

1. Place the access cover on robot. Be sure the cover is right side up. The cover should match the "line" the large cover has when the screw holes are matched up.

2. Insert all the Phillips screws and tighten all hardware.

To remove the outer and inner arm link covers:

1. Locate the 3 Phillips head screws that fasten the cover to the outer arm link.

2. Remove the screws and arm cover placing them in a safe place.

3. Locate the 4 Phillips head screws that fasten the cover to the inner arm link.

4. Remove the screws and arm cover placing them in a safe place.

To inspect the arm belts:

1. Locate the belts in both the upper and lower links.

2. Inspect the belts to see if there is any obvious damage or dark discoloration to the belts.

3. Check to see if any of the belts are frayed or cut.

4. Replace the cover and tighten all hardware.

Artisan Technology Group - Quality Instrumentation ... Guaranteed | (888) 88-SOURCE | www.artisantg.com

Diagnostics for the Single-Arm Robot

Step-by-step instructions are given for both the Teach Pendant and EQT 32 in this section. If you need basic how-to information for either the Teach Pendant or EQT 32, refer to the *Smart Controller Hardware and Software User's Manual*. The diagnostic steps are summarized in the following table.

Table 9-2: Diagnostic Tests

Test	Purpose	Warnings and Cautions
Test 1: NVS-Ram Test on page 9-18	Verify that NVSRAM is correctly formatted and all required files are available.	
Test 2: Galil and I/O Test on page 9-19	Verify that the Galil motion control board and I/O ports are functioning correctly. If you cannot turn a servo motor on and off, test the I/O board.	If this test fails, you will often not be able to run any other steps.
Test 3: Encoder Read on page 9-21	Verify that the controller receives the correct encoder feedback from the robot.	Make sure the robot signal cable is securely connected.
Test 4: Limit and Home Test on page 9-22	Test the limit and home switches.	Before you move the axes, make sure the robot signal cable is securely connected.
5. Amplifier Board Setup	*Do not use.*	*Do not use. Not available on EQT 32.*
6. Amplifier Module Setup	*Do not use.*	*Do not use. Not available on EQT 32.*
Test 7: Servo Test on page 9-23		Use only if Encoder Read test passed.
Test 8: Home Test and Set on page 9-24	Use if belt slipping is suspected or after replacing robot parts that require detaching belts.	All belts, pulleys, motors, and so on are securely attached.
Test 9: R-Home Test and Set on page 9-27	Set home flag and home offset.6.0+ firmware prompts the user to save the new home offset to the parameter file in NVS-RAM.	For earlier versions of firmware, issue the SAV command to save the new offset to the parameter file.
Test 10: Scaling Factor Test on page 9-28	View the absolute position as determined by the mechanical ratio.	
Test 11: Vacuum Valve and Vacuum Sensor Test on page 9-29	Verify the vacuum I/O and adjust the sensor.	
12. Robot I/Os	Verify customized external I/O.	
Test 13: Scanning Test on page 9-30	Test the laser scanner and laser sensor on robots with a laser scanner and no speed interlock mapping.	Do not look at the laser beam!

Artisan Technology Group - Quality Instrumentation ... Guaranteed | (888) 88-SOURCE | www.artisantg.com

Using EQT to Run Diagnostics

Use the EQT Diagnostic mode to diagnose and locate problems with robot and controller or when you are calibrating the robot after a repair or parts replacement. In the Terminal-mode window, press the Diagnostics button.

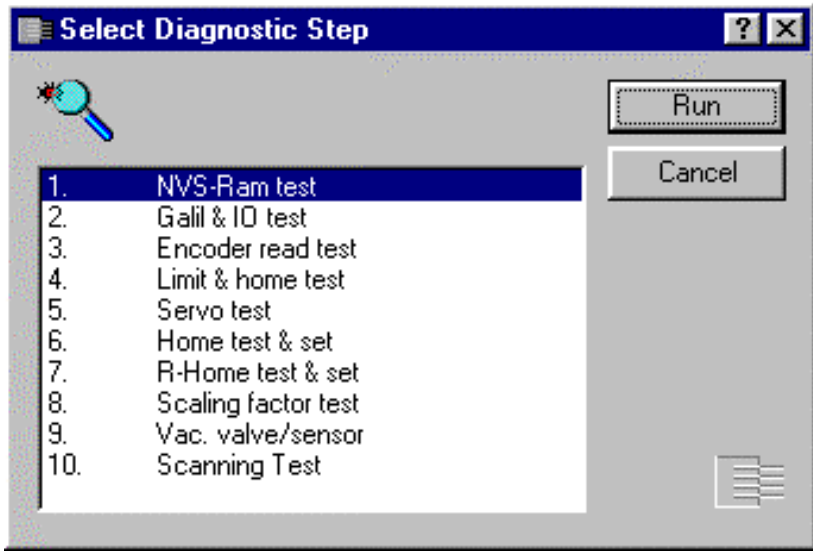

Figure 9-4: Diagnostic Window

The Diagnostic window displays the available tests. Double-click the step you need or select it and press the Run button.

The ten tests are discussed here in numerical order.

Artisan Technology Group - Quality Instrumentation ... Guaranteed | (888) 88-SOURCE | www.artisantg.com

Test 1: NVS-Ram Test

The NVS-Ram (**N**on **V**olatile **S**tatic **Ram**) test displays the status of various files in the controller. The status can be OK, BAD or Not Open

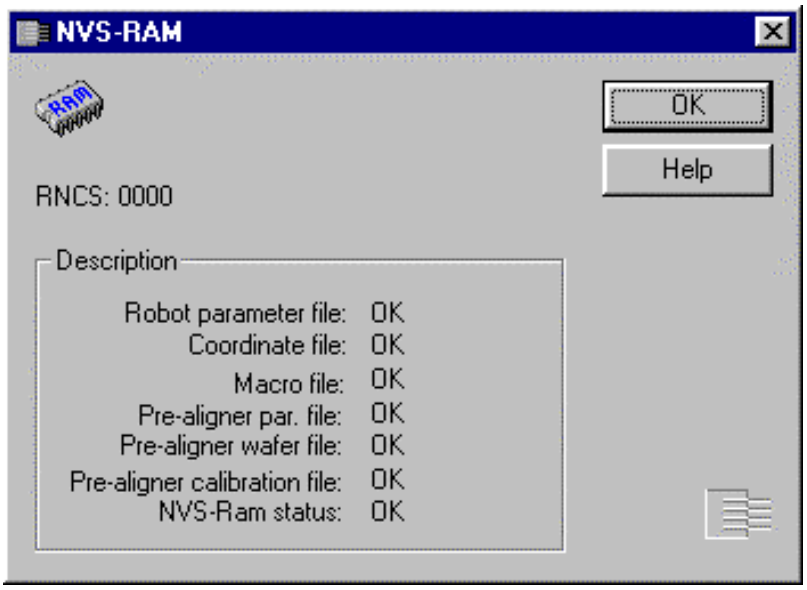

Figure 9-5: NVS-RAM Window

If all files and NVS-Ram are OK, click on the OK button to return to the Diagnostic main menu.

If a file status is BAD or Not Open, download that file. Return to the Terminal mode window and press the Download button.

If the NVS-Ram status is BAD, re-initialize NVSRAM and then download all the files by accessing the Format NVSRAM dialog.

Artisan Technology Group - Quality Instrumentation ... Guaranteed | (888) 88-SOURCE | www.artisantg.com

Test 2: Galil and I/O Test

The Galil and I/O board test checks the Galil board and the I/O printed circuit board (PCB). Use this test when you suspect a problem with the servo motor. That is, if you cannot turn on the servo motors on the Teach-mode window or if you execute the SVON command and the ? prompt is returned, use this test

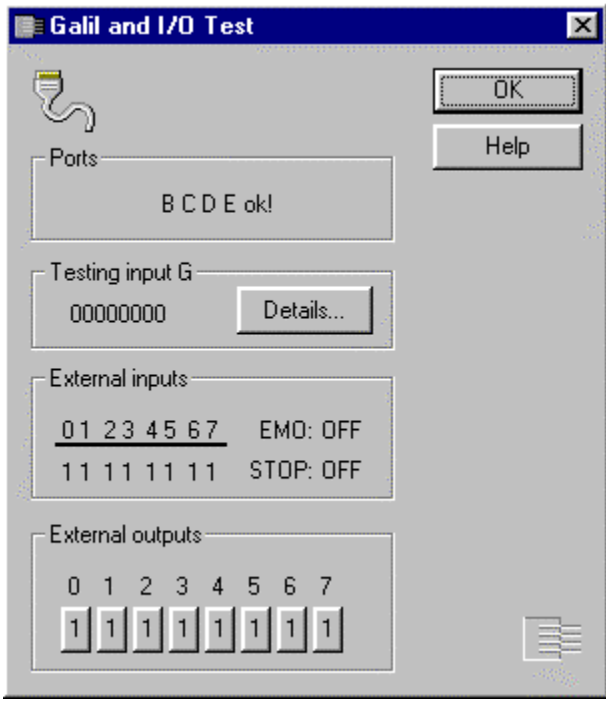

Figure 9-6: Galil and I/O Test Results Box

The dialog is divided into four sections:

The **Ports** box displays robot I/O port status. If a port communication fails, the message **Port X BAD!** is displayed, , where X is the port designator. If **Port B Failed** is displayed, it is probable that the signal cable is loose. Ensure that all cables are correctly connected. The test returns to Diagnostic Main menu. If that happens, repeat the test. If the test fails again, check the jumper settings. If the jumper settings are correct, replace the I/O board.

Testing Input G

Testing input G indicates the controller internal connection based on the Port G information. Input G should be all zerses when all cables, including robot signal cable, are connected. If any bits are 1, press the Details button to view a description of each bit.

Artisan Technology Group - Quality Instrumentation ... Guaranteed | (888) 88-SOURCE | www.artisantg.com

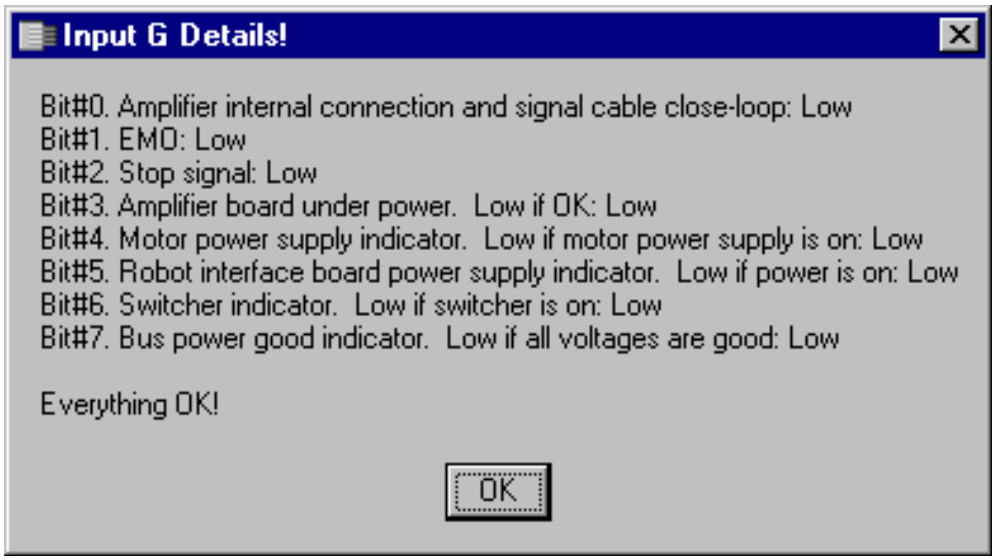

Figure 9-7: Input G Details! Information Box

External inputs displays the state of maskable input port (port H masked with port C), Emergency off, and STOP signals. With all external switches and sensors connected to this port, try to activate and deactivate sensors, and turn switches on and off. Corresponding bits must toggle, including MOFF (shown as EMO in the dialog) and STOP bits. If this test fails, check wiring continuity. If the wiring is OK, replace the I/O board.

Use the **External outputs** box to activate or deactivate external devices connected to external outputs. Click on each bit button to toggle each bit on/off. Observe the lights on the tester. If this test fails, check wiring continuity. If the wiring is correct, replace the I/O board.

Artisan Technology Group - Quality Instrumentation ... Guaranteed | (888) 88-SOURCE | www.artisantg.com

Test 3: Encoder Read

Use this test to verify that the controller receives the correct feedback from the robot. Before you move an axis, make sure the robot signal cable is securely connected.

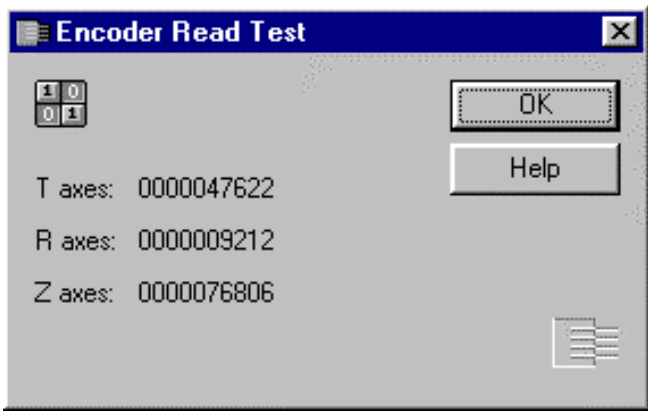

Figure 9-8: Encoder Read Test Information Box

As you manually move one axis, observe whether the number counts up or down. As an axis moves in the positive direction, the number should count up and as it moves in a negative direction, the number should count down. The number should count smoothly, one increment at a time.

If this test fails for an axis, use a test motor to test the encoder input. If the test succeeds with the test motor, replace the failing motor and encoder.

If this doesn't resolve the problem, replace the robot signal cable. If the problem persists, replace the robot interface board. If the problem persists, replace the Galil board. If the problem persists, replace the Flex-PCB. Finally, replace the motor.

Artisan Technology Group - Quality Instrumentation ... Guaranteed | (888) 88-SOURCE | www.artisantg.com

Test 4: Limit and Home Test

Before you move the axes to activate the switch indicators, make sure the robot signal cable is securely connected.

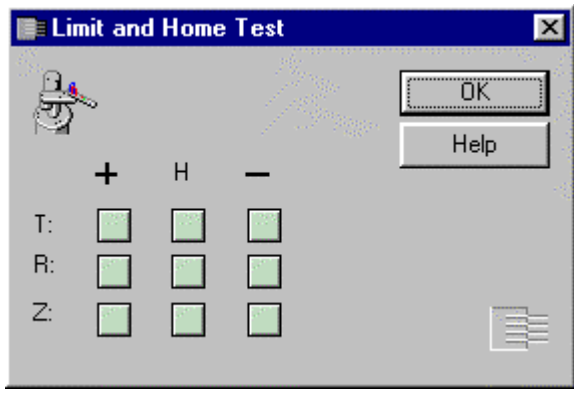

Figure 9-9: Limit and Home Test Dialog Box

This tests the Limit switches and Home switches. As you move each axis to its negative and positive limits, the corresponding limit position indicator should illuminate when the robot reaches each of the motion stops. Activating the negative limit switches triggers the Home switch for that axis. Note that the R axis has one limit switch, the negative limit or home switch.

If the Limit switches remain *off* at all times, verify that the signal cable, robot internal interface, and Flex-PCB are securely connected.

If the Limit switches remain *on* at all times, unplug the signal cable. If the limit switch then turns off, replace the limit switch assembly. If the limit switch remains on, replace the signal cable or Galil board.

Artisan Technology Group - Quality Instrumentation ... Guaranteed | (888) 88-SOURCE | www.artisantg.com

Test 7: Servo Test

Run the Servo Test only after you pass the Encoder Read Test. Before you move an axis, make sure the robot signal cable is securely connected.

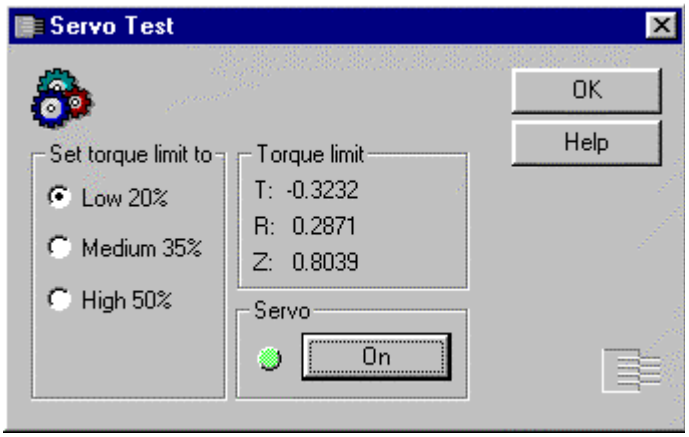

Figure 9-10: Servo Test Dialog Box

To test the continuous action of amplifier modules:

1. In the Set torque limit box, select the lowest torque limit.
2. In the Servo box, toggle the servo on.
3. Manually move one axis at a time. You should feel the motor apply counter-directional force smoothly and continuously without jerking.
4. Repeat Step 3 for another axis.
5. Increase torque limit and repeat.

Artisan Technology Group - Quality Instrumentation ... Guaranteed | (888) 88-SOURCE | www.artisantg.com

Test 8: Home Test and Set

Each robot motor is factory set such that the distance between the home switch and the encoder index is always between 1/3 and 2/3 of a motor revolution away. This is critical for maintaining repeatability of the home position of each axis at a given mechanical calibration.

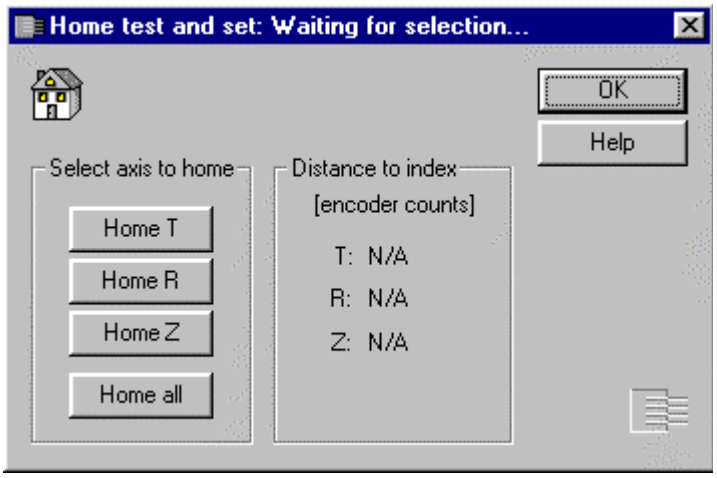

Figure 9-11: Home Test and Set: Waiting for Selection Dialog Box

In the following graphic, the robot Z axis is homed. The homing procedure moves an axis to its home switch and then moves in the opposite direction to find the encoder index. (The encoder index is up to one encoder revolution mark).

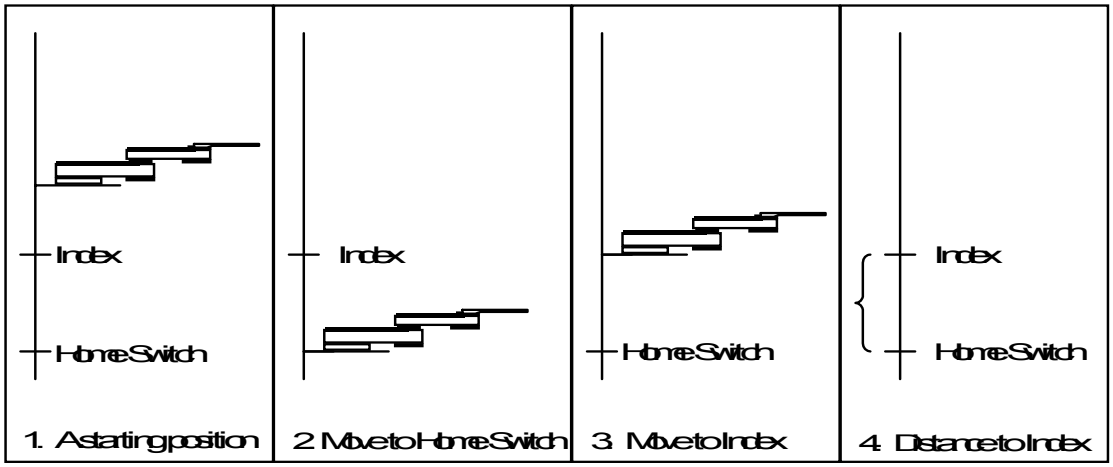

Figure 9-12: Homing the Z Axis

Artisan Technology Group - Quality Instrumentation ... Guaranteed | (888) 88-SOURCE | www.artisantg.com

If the *Distance to Index* is too short, the controller can miss the first occurrence of index signal because it occurs too soon after the home switch signal. Thus, the motor is required to move one more revolution to generate the signal. At a particular distance, this doesn't happen every time and thus creates two different home positions, where the second home is too far.

This test determines the distance to index, evaluates it, and assists in making the correction. To verify which axis is incorrect, press the Home all button. All home distances are displayed without activating the correction software.

Adjusting the Distance to Index on an ABM 400 Series with Track

This procedure is used when the distance is ovvurring too close to the limit switch for ABM 400 series with track robots.

First find the distance to the index using the following commands in GALIL mode. It may not be necessary to do this in GALIL mode if you are set up to do it using STEP #8 (HOME TEST & SET) on page 9-36. Issue the **GALIL** command from the terminal mode.

Table 9-3: Galil Commands

GALIL	;If Track is used with Pre-Aligner, then type **GALIL** 1
HMW	;Home the Track axis
BGW	;Starts motion and stops at first index after home flag
TPW	;Tell position of the axis
FEW	:Finds edge, moves back to home flag
BGW	;Begins motion
TP W	;Tell new position of axis
`CTRL+I`	;Exit GALIL mode

Subtract the second **TP** (tell position) value from the previous value of **TP W.** If the difference in counts is between 1000 and 3000, then the distance to index is fine. Otherwise, do the hardware correction.

To apply the hardware correction:

Use these steps to chang the distance to index to be within 1000 and 3000 range count by making these hardware changes.

Artisan Technology Group - Quality Instrumentation ... Guaranteed | (888) 88-SOURCE | www.artisantg.com

1. Change distance to index to be within 1000 and 3000 range counts with these hardware changes.

2. Loosen the motor mounting bracket on the track assembly after shutting off power.

3. Pop the belt of the idler pulley that is on the track (This pulley does not contain any teeth and it is situated between main idler pulley and the boggie roller pulley)

4. Slide belt a couple of notches.

5. Snap the belt back on the idler pulley.

6. Tighten motor mounting bracket.

7. Return to Step 1

8. Go to Adjusting the Distance to Index on an ABM 400 Series with Track on page 9-25 and repeat the Galil commands to determine if the distance to **TP** is between 1000 and 3000 counts. If it is not, continue with the procedure until the TP is in the correct range.

Artisan Technology Group - Quality Instrumentation ... Guaranteed | (888) 88-SOURCE | www.artisantg.com

Test 9: R-Home Test and Set

The R-Home Test and Set determines and sets the physical Home position of the Radial axis. Physical position is the position in the robot polar coordinate system.

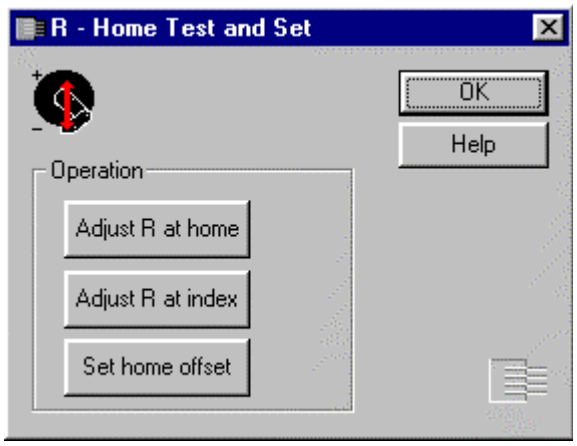

Figure 9-13: Home Test and Set Dialog Box

Three operations are available. Use the Adjust R at home and Adjust R at index operations only if you need to adjust the physical position at which the Home switch and Index are activated. For example, to have the R-axis home flag activate at 5.0 in (127 mm) from its Center Overlapping Position (5.0 in or 127 mm center-to-center), press the Adjust R at home button. Center Overlapping Position (COP) is the position where the upper arm link is overlapping exactly in the middle of the lower link.

The Set home offset operation verifies that the Home offset is correct or assists in recalculating it.

NOTE: *EQT automatically saves the new home offset to the Robot Parameter File in NVS-RAM upon exiting this step.*

For more details, refer to the description of STEP #9 (R-HOME TEST & SET) description.

Artisan Technology Group - Quality Instrumentation ... Guaranteed | (888) 88-SOURCE | www.artisantg.com

Test 10: Scaling Factor Test

To verify the scaling factor on each axis or to verify that the Mechanical Ratio parameter is correct, select the Scaling Factor test. The R-axis position is not linear with respect to encoder counts. The scaling factor algorithm requires the precise Zero position of the R axis to be at the COP

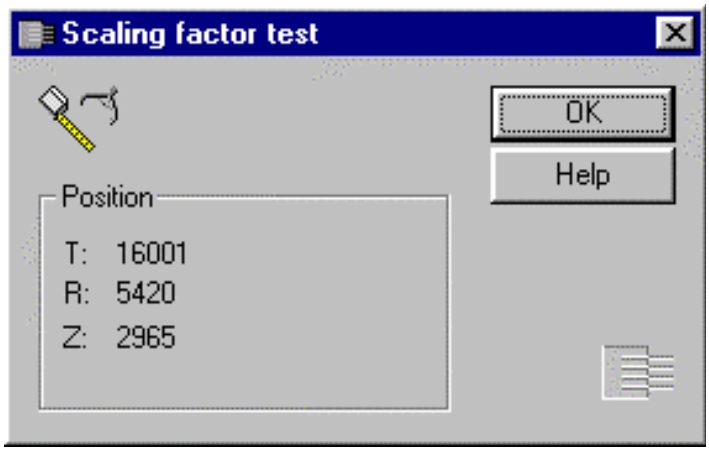

Figure 9-14: Scaling Factor Test Dialog Box

The position of Theta is expressed in 0.01°, Radial in 0.001 in, and Z-axis position in 0.001 in units. Before executing this test, be sure that the R axis is homed. You will need a measuring device.

Move the R-axis. Measure the physical movement, that is, the displacement of the axis, not the absolute position. Compare your result with the reading on the screen.

Artisan Technology Group - Quality Instrumentation ... Guaranteed | (888) 88-SOURCE | www.artisantg.com

Test 11: Vacuum Valve and Vacuum Sensor Test

If your robot has only one vacuum valve and sensor, use V1 or #1 in this dialog.

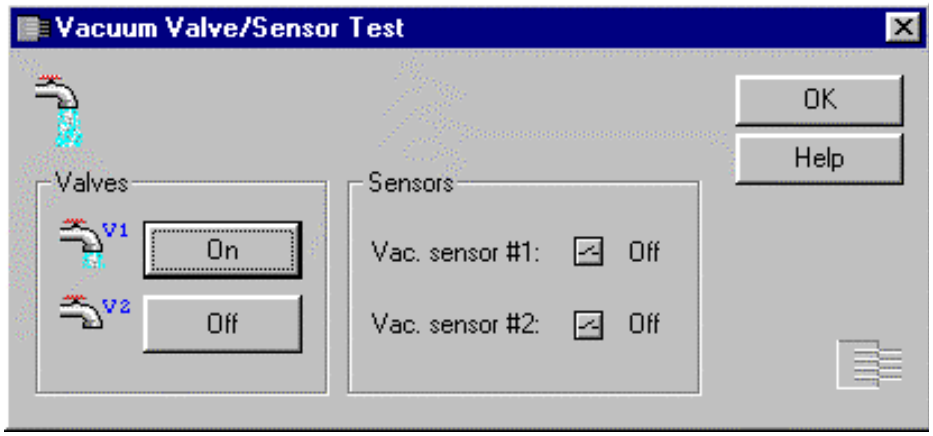

Figure 9-15: Vacuum Valve/Sensor Test Dialog Box

Turn the vacuum valve on (open the valve) and put and remove an object on the end-effector. The vacuum sensor should indicate On and Off respectively. If the sensor remains on or off when the object is moved, the sensor is set incorrectly. Refer to "Adjusting the Vacuum Sensor" in the installation chapter for instructions on adjusting the sensitivity.

Artisan Technology Group - Quality Instrumentation ... Guaranteed | (888) 88-SOURCE | www.artisantg.com

Test 13: Scanning Test

This test is only for robots that have a laser scanner without speed interlock mapping

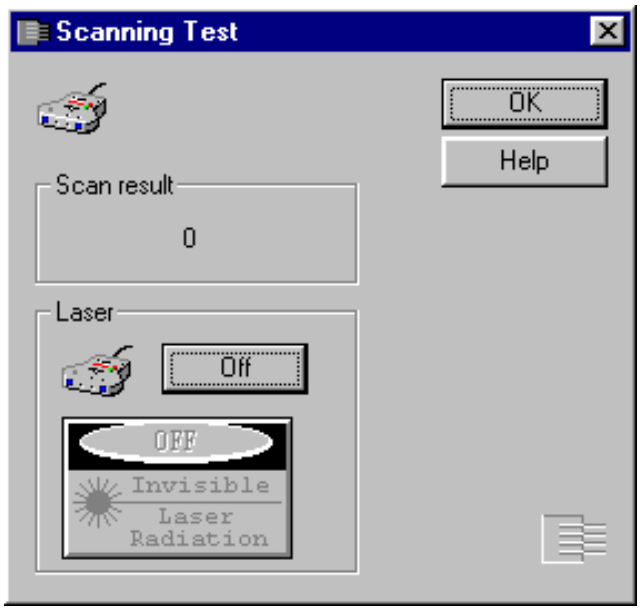

Figure 9-16: Scanning Test Dialog Box

To verify the connection and functionality of the Laser Scanner, press the Laser button to turn the laser on. Place an object two inches in front of scanner. Scan result should change accordingly.

DANGER

When running this test, do not look at the laser beam. The laser radiates an invisible infra-red spectrum.

Artisan Technology Group - Quality Instrumentation ... Guaranteed | (888) 88-SOURCE | www.artisantg.com

Using the Teach Pendant to Run Diagnostics

To start Diagnostics, access the display, then simultaneously press `CTRL+D`. The Diagnostics menu is displayed.

```
DIAGNOSTICS

ESC-QUIT      HERE-GO
```

If your system has a robot and a pre-aligner, you are prompted to indicate pre-aligner diagnostics or robot diagnostics. Select robot diagnostics.

In Diagnostics mode, the following keys are recognized.

Table 9-4: Keys Recognized During Diagnostic Mode

Key	Action
HERE	Continues or accepts
ESC	Quits or cancels or aborts
>>>	Increments the step or current value
<<<	Decrements the step or current value
Q ON/OFF	Toggles the servo or selects the Theta axis
R ON/OFF	Toggles the servo or selects the R axis
Z ON/OFF	Toggles the servo or selects the Z axis
A	Selects all axes
Y	Yes
N	No

The Diagnostics mode has 13 steps. The current step and its title are displayed. Use the >>> or <<< button to select the next or previous step. When the desired step is displayed, press HERE. After each step, press HERE (or ENTER) to advance to the next Step.

STEP #1 (NVSRAM Test)

NVSRAM Test first checks the Non-Volatile Static RAM (NVSRAM) and then checks

Artisan Technology Group - Quality Instrumentation ... Guaranteed | (888) 88-SOURCE | www.artisantg.com

the files.

If the NVSRAM is *not* correctly formatted, the message NVSRAM NOT READY is displayed. Refer to the FRMT 313 command for formatting information. After you format the NVSRAM, download the required files. These files were delivered on a diskette with your system.

If the NVSRAM is OK, the parameter, coordinate, and macro files are checked. Messages report the status of each file:

- **`Check-Sum OK`** indicates the space allocation for file is not corrupt.
- **`File Not Open`** indicates there is no file. Download the specified file.
- **`Check-Sum Bad`** indicates the file is damaged. Download the file again. For a coordinate file, teach the coordinates and save them in the file with the SAV command. For the macro file, download the file and send the SMCR command to save the macro file to NVSRAM.

STEP #2 (GALIL & I/O TEST)

Galil Board Test

To test the Galil board, the diagnostics software attempts to communicate with the Galil board. A message indicates whether Galil passed or Galil failed.

If the test fails, there is an error in communication between the Galil board and the CPU board. The probable cause is an incorrectly set jumper. Remove the Galil board and check the jumper setup. If the jumpers are correctly set, replace the Galil board.

Ports A, B, C, D, and E

The I/O Board Test verifies communication for each I/O port. If the port communications work, the message **Port A, B, C, D, E OK** is displayed and the tests continue.

If a port communication fails, the message **Port X,,, BAD** is displayed, where X is the port designator. If **Port B Failed** is displayed, it is probable that the signal cable is loose. Ensure that all cables are correctly connected. The Main Menu is displayed. Repeat the test. If the test fails a second time, check the jumper settings. If the jumper settings are correct, replace the I/O board.

Artisan Technology Group - Quality Instrumentation ... Guaranteed | (888) 88-SOURCE | www.artisantg.com

Controller Internal Connection and Port G

In the display, the order of XXXXXXXX, Bit 0 to Bit 7, is left to right.

Bit 0 ⟶ XXXXXXXX ⟵ Bit 7

That is, the left-most digit is the least significant bit (LSB) and the right-most digit is the most significant bit (MSB).

```
Testing Input G
VALUE:
XXXXXXXX
     Generate Error
```

When all cables, including the Robot signal cable, are connected, Input port G should be all zeros. The following table describes each bit when it is set to 1 and how to correct the problem.

Table 9-5: Robot Signal Cable Bits for Input Port G

Bit	Description	Corrective Action
0	Internal amplifier connections or robot signal cable.	Check I/O to Galil cable, I/O to amplifier board, and the signal cable. If all cables are OK, replace the I/O board. If a problem persists, replace the robot interface board.
1	Motor off.	Check the interlock switch (EMS/MOFF) to ensure it is in the correct state.
2	Stop input.	Check stop input.
3	Amplifier Board Under Power indicator	Check green LED on amplifier board. • If ON (board under power), check I/O to amplifier board cable and I/O board. • If OFF (board has no power), and there is voltage to the amplifier board (P3 pin # 2 and 3 should be 41V to 46V), replace the amplifier board. If no voltage, check motor power supply (torroidal transformer) and relay
4	Motor Power Supply indicator	Check I/O to power supply cable and I/O board.

Artisan Technology Group - Quality Instrumentation ... Guaranteed | (888) 88-SOURCE | www.artisantg.com

Table 9-5: Robot Signal Cable Bits for Input Port G

Bit	Description	Corrective Action
5	Robot Interface Board Power Supply indicator. Usually accompanied by bit 3.	Check the Power Supply board (located above the switching power supply). If the LED lights, check I/O to power supply cable and I/O board. If LED is not ON, check relay input for 5V.
6	Switcher indicator	None. This condition occurs approximately 30 ms before the controller shuts down.
7	Bus Power Good indicator	None. The diagnostics software never observes this condition.

Testing External Input

For the external (user) input ports, such as the STOP port and the Emergency Off (EMO) port, the display reads:

```
Testing Ext. Input
Press Switches
IO Read:  XXXXXXXX
INTLK  On/Off     STOP  On/Off
```

With all external switches and sensors connected to this port, turn the switches ON and OFF to activate and deactivate the sensors. The IO Read value must correspond to your sensors or switches.

If this test fails, Contact Brooks Automation Technical Support on page 10-31.

Testing External Outputs

Use this test to activate and deactivate your external devices connected to the external outputs of the controller. The display reads:

```
Testing Ext. Output
Enter Bit# to toggle
IO Read: XXXXXXXX
```

On the numerical keypad, use 0 through 7 to toggle the outputs.

If this test fails, contact Brooks Automation Customer Support.

Artisan Technology Group - Quality Instrumentation ... Guaranteed | (888) 88-SOURCE | www.artisantg.com

STEP #3 (ENCODER READ TEST)

Use this test to verify that the controller receives the correct feedback from the robot. Before you move an axis as requested, make sure the robot signal cable is securely connected.

As you manually move one axis, observe whether the encoder number counts up or down. As an axis moves in the positive diretion, the number should count up and as it moves in a negative direction, the number should count down smoothly.

```
T:      XXXXXXX
R:      XXXXXXX
Z:      XXXXXXX
Move Axes
```

If this test fails for an axis, use a test motor to test the encoder. If the test succeeds with the test motor, replace the failing motor and encoder.

If this doesn't resolve the problem, replace the robot interface board. If the problem persists, replace the Galil board. If the problem persists, replace the Flex-PCB. Finally, replace the motor.

STEP #4 (LIMIT & HOME TEST)

Before you move the axes to activate the switch indicators, make sure the robot signal cable is securely connected.

In the display, the symbols [-], [H], and [+] indicate the locations for negative limit switch, home switch, and positive limit switch, respectively.

```
T:      [-]     [H]     [+]
R:      [-]     [H]     [+]
Z:      [-}     [H]     [+]
Act. Limit Switches
```

When you manually move the axes to their limits (negative or positive), limit switches are activated and the display changes accordingly. Activating the negative limit switch for an axis triggers the Home switch for that axis. Note that the R axis has a Home switch, but not a limit switch.

- If the Limit switches remain *off* at all times, verify that the signal cable, robot internal interface, and Flex-PCB are securely connected.
- If the Limit switches remain *on* at all times, unplug the signal cable. If limit switch then turns off, replace the limit switch assembly. If the limit switch remains on, replace the signal cable or Galil board.

Artisan Technology Group - Quality Instrumentation ... Guaranteed | (888) 88-SOURCE | www.artisantg.com

STEP #5 (AMP. BOARD SETUP)

Do not perform Step 5. Press the >>> key to advance to the next step.

STEP #6 (AMP. MODULE SETUP)

Do not perform Step 6. Press the >>> key to advance to the next step.

STEP #7 (SERVO TEST)

Run the Servo Test only after you pass the Encoder Read Test. Before you move an axis, make sure the robot signal cable is securely connected.

```
T:      XXXX
R:      XXXX    TL
Z:      XXXX    YYYY
Move Axes
```

In the display, XXXX TL is the torque limit being sent to the corresponding motor, and YYYY is the current torque limit setting.

To test the continuous action of the amplifier modules:

1. Set the torque limit (TL) to 3333 by pressing the > and < buttons as needed.

2. Manually move one axis at a time. You should feel the motor apply a counter-directional force smoothly and continuously without jerking.

Repeat Step 2 for another axis. At higher torque settings, be careful to not apply too much force because the belts might slip.

STEP #8 (HOME TEST & SET)

Each robot motor is factory set such that the distance between the home switch and the encoder index is always between 1/3 and 2/3 of a motor revolution away. This is critical for maintaining repeatability of the home position of each axis at a given mechanical calibration.

In the following graphic, the robot Z axis is homed. The homing procedure moves an axis to its home switch and then moves in the opposite direction to find the encoder index. (The encoder index is up to one encoder revolution mark.)

Artisan Technology Group - Quality Instrumentation ... Guaranteed | (888) 88-SOURCE | www.artisantg.com

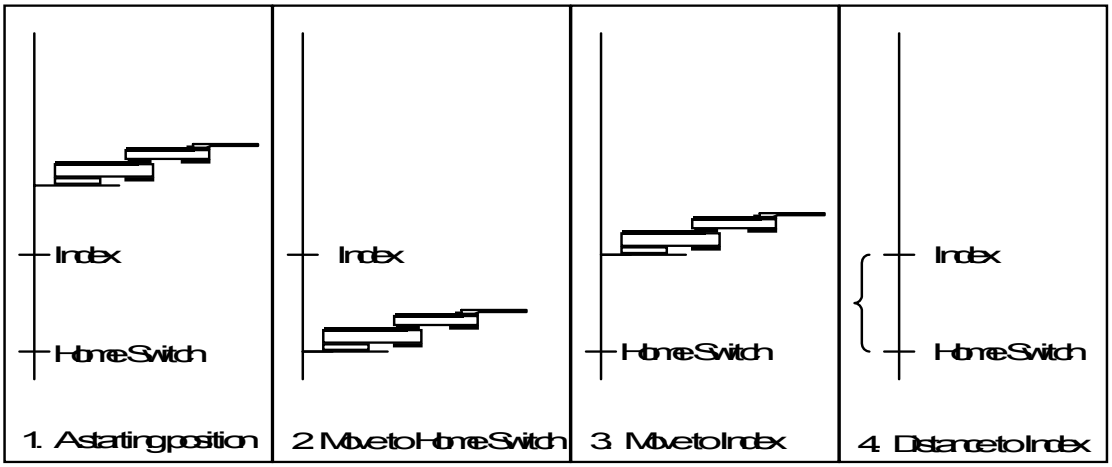

Figure 9-17: Hojming the Z Axis

If the Distance to Index is too short, the controller can miss the first occurrence of the index signal because it occurs too soon after the home switch signal. Thus, the motor is required tomove one more revolution to generate the signal. At a particular distance, this does not happen every time and thus creates two different home positions, where the second home is too far.

Step 8 determines the Distance to Index, evaluates it, and assists in making the correction. The operation is as follows:

1. Press Enter. The Amplifier board initializes. If there is no closed loop, the test stops. If this happens, check the connection.

2. You are prompted to select an axis to home. Use the toggle buttons to select the axis.

3. The axis homes, stopping at the home switch and then at the index mark. The Distance to Index is displayed in encoder counts. (One revolution is 4 times the encoder pulses per channel.)

4. If the Distance to Index is corrupt, you are prompted to move the axis to a *GOOD* position. This is the position where you can release the belt attached to the motor. Press ESC to start over or press Enter to Continue.

5. You are prompted to lock the axis so it cannot move. Release the belt. When you are finished, press ESC to start over or press Enter to continue.

6. While the motor is moved to position, the display reads MAKING CORRECTION…

Artisan Technology Group - Quality Instrumentation ... Guaranteed | (888) 88-SOURCE | www.artisantg.com

7. When the correction is done, you are prompted to replace the belt. After the belt is replaced, press Enter.

STEP #9 (R-HOME TEST & SET)

Step #9 consists of three substeps:

- Fine-tune the physical position at the home switch
- Adjusting the physical position at the index
- Setting the home offset.

Use only the first two substeps to constrain the physical position at the home switch and at the index. For example, you might want the R-axis retracted the maximum of 5.0 in (127 mm) from its center (5.0-in center-to-center) when performing the first home motion and a maximum of 0.5-inch forward for the second motion.

Adjust the Home Offset so that when the R-axis is at 0 and the arm links are in the Center Overoapping Position (COP). In the COP, the upper link overlaps exactly over the center of the lower link.

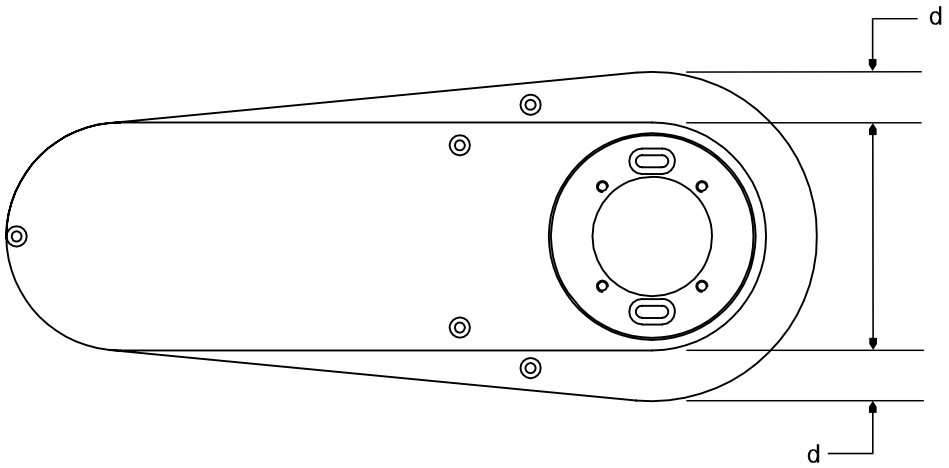

Figure 9-18: Center Overlapping Position

To adjust the physical position at the Home switch:

1. Loosen the screws on the big pulley inside the lower link of the R axis as shown in Figure 9-19 on page 9-39.

Artisan Technology Group - Quality Instrumentation ... Guaranteed | (888) 88-SOURCE | www.artisantg.com

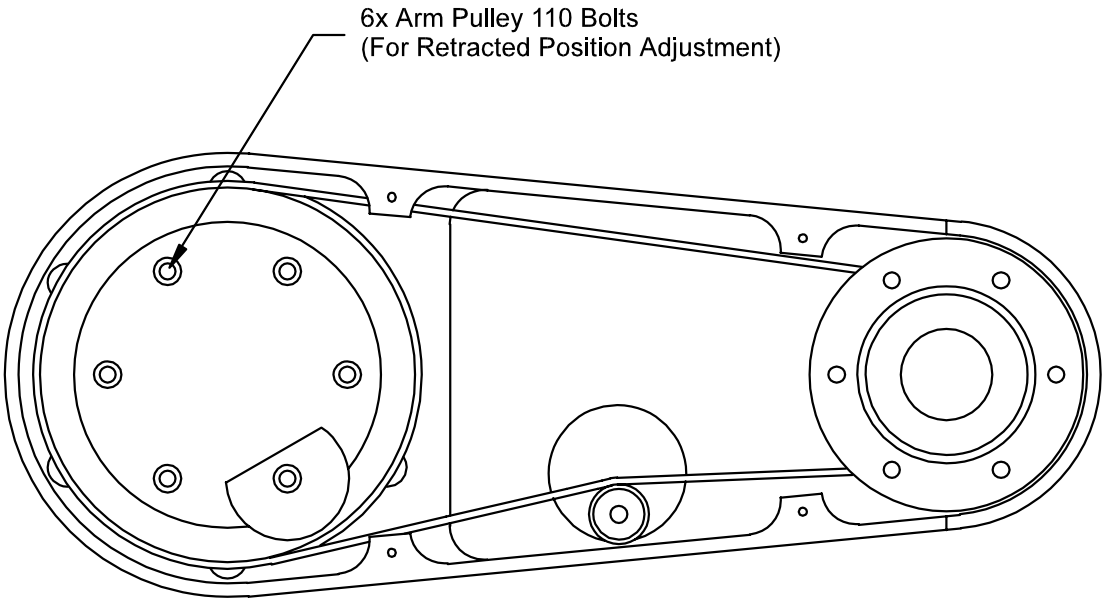

Figure 9-19: Arm Showing Arm Pulley Bolts

2. You are prompted to adjust R at Home. Press the Y button. The robot moves to the Home switch.

3. You are prompted to move the arm links to a position 5.0 in (127 mm) behind the COP. Tighten the screws. Press Enter when you are finished or ESC to start over.

To adjust the physical position at the Index:

1. You are prompted to adjust R at Index. Press the Y button. The robot moves to the Encoder Index.

2. You are prompted to move R to the Index position as shown in xx.

Artisan Technology Group - Quality Instrumentation ... Guaranteed | (888) 88-SOURCE | www.artisantg.com

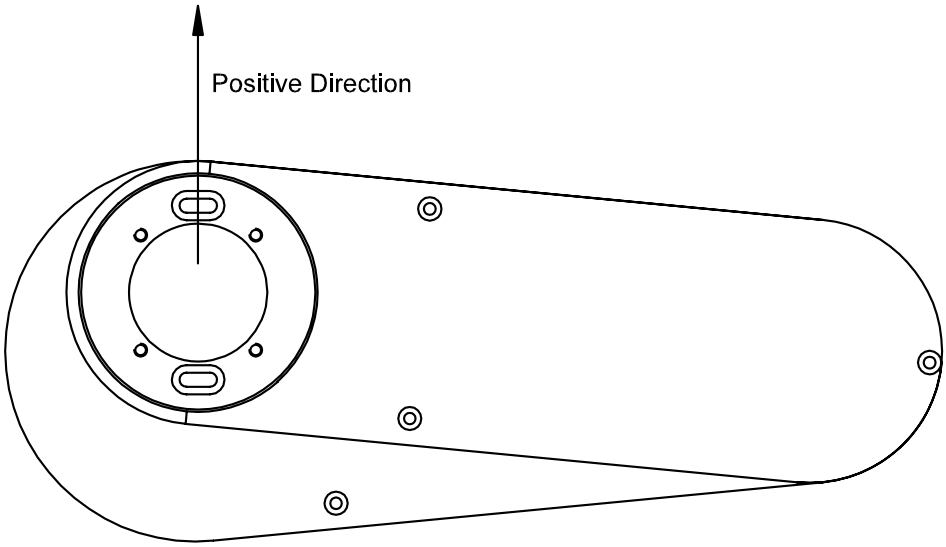

Figure 9-20: Axis R Moved to the Index Position

Release the belt directly attached to the motor and move to position. Press Enter when you are finished or ESC to start over.

3. After the servo motor turns off, tighten the screws.

Remember, Step #9 changes the Distance to Index. To make sure it is still within the recommended distance, repeat Step #8. If the Distance to Index is not correct, it is because the combination of the physical positions of the Home switch and Index is not achievable. Try a different combination.

To set the Home offset:

1. The robot homes to its Radial axis and then moves to its COP.

2. You are prompted to determine if the offset is correct. If the upper link is in the correct COP, press Y (Yes) and return to the Main Menu. If it is not in the correct COP, press N to correct it. The servo motor is turned off; manually move the R axis to its COP and press the HERE button. To return to the Main Menu without making a correction, press ESC.

3. If you established a new Home Offset in this step, **6.0+ firmware** prompts you to save the new home offset to the Robot Parameter File in NVSRAM.

For **earlier firmware**, send these commands to save the new home offset:

RSA A
SAV

Artisan Technology Group - Quality Instrumentation ... Guaranteed | (888) 88-SOURCE | www.artisantg.com

STEP #10 (SCALING FACTOR TEST)

Use Step 10 to verify the scaling factor on each axis or to verify that the Mechanical Ratio parameter is correct. The R axis is not linear with respect to encoder counts. The scaling factor algorithm needs the precise Zero position of the R axis.

Before executing this test, make sure you **HOME** the R axis (Step 9 or **HOME R** command in Terminal mode). You need a measuring device.

The display reads:

```
T:      TTTTTTT
R:      RRRRRR
Z:      ZZZZZZZ
Move Axes
```

where TTTTTT is the position of Theta in 0.01°, RRRRRR is the Radial position expressed in 0.001-in., and ZZZZZZ is the Z-axis position expressed in 0.001-in. units.

Manually move the axis you want to check. Measure the physical movement, that is, the displacement of the axis, not the absolute position. Compare the result with the reading on the Teach Pendant.

STEP #11 (VAC. VALVE/SENSOR)

Step 11 tests the vacuum valve(s) and vacuum sensor(s) attached to the robot. For models with one vacuum valve and one sensor, only position #1 is relevant.

```
              #1        #2
Vac Sensor    On/Off    On/Off   (Vacuum Sensors)
Vac Valve     On/Off    On/Off   (Vacuum Valves)
Press '1' or '2'
```

Turn the vacuum valve on (open the valve) by using number key 1 for valve one and then pressing the 2 key for the second valve. Place and remove an object on the end-effector. The vacuum valve should indicate On and Off respectively.

If the sensor remains on at all times, decrease the sensitivity. If it remains off, increase the sensitivity. Refer to "Adjusting the Vacuum Sensor" in the Installation chapter for instructions on adjusting the sensitivity.

Artisan Technology Group - Quality Instrumentation ... Guaranteed | (888) 88-SOURCE | www.artisantg.com

STEP #12 (ROBOT I/O'S)

This step tests the output connections for Port A and reads the input for Port F.

```
BYTE #:  01234567

OUT      00000111
IN       11111111
```

Use the number keys, 0 to 7, to toggle the eight output bits. The first five bits should toggle, indicating the connections are working. The last three bits do not toggle.

STEP #13 (SCANNING)

This test is only for robots that have a laser scanner without speed interlock mapping.

```
SCANNING

OUT:     XXXXXXXX
AT:      XXXXXXXX
```

To verify the connection and functionality of the Laser Scanner, turn on the laser by pressing the number 2 key, which corresponds to the laser. The OUT line displays the status for Output port A, bit 2. The AT line displays the Z-axis position.

Place an object two inches in front of scanner. As you move the object, the display indicates:

- Hi ∧ Lo Object not sensed
- Lo ∧ Hi Object is sensed

DANGER

When running this test, do not look at the laser beam. The laser beam radiates on invisible infra-red spectrum.

To exit Diagnostics, press `CTRL+ESC`.

Artisan Technology Group - Quality Instrumentation ... Guaranteed | (888) 88-SOURCE | www.artisantg.com

10 Troubleshooting

Overview

This chapter describes how to troubleshoot robot problems.

Contents

Troubleshooting Robot Start up 10-3
Robot Start Up Procedure. 10-3
Robot Will Not Home Procedure 10-6
Robot Will Not Servo On 10-8
Using the Teach Pendant and EQT 32 to Troubleshoot 10-10
Common Problems 10-11
Frequently Asked Questions 10-12
What do I do if I get a new robot? 10-12
What do I do if I get a new controller? 10-12
Checking Robot Status 10-14
Using the STAT/STAT2 Command 10-15
Checking NVSRAM with RNCS Command 10-18
Checking Limit Switch Status with the RLS Command 10-19
Using the GLST Command 10-23
Problem Causes and Suggested Actions 10-25
Aftermath Analysis 10-29
Contact Brooks Automation Technical Support 10-31

Artisan Technology Group - Quality Instrumentation ... Guaranteed | (888) 88-SOURCE | www.artisantg.com

Troubleshooting Overview

This chapter describes how to troubleshoot robot problems using the following methods:

- Recognize problems that have been solved before and apply the known answer by reading Common Problems and the Frequently Asked Questions (FAQs).
- Verify what does work and what does not work. Run the diagnostics described in chapter 9. To access the controller information on the functioning of various components, use the EQT Information Request or send various information commands. Use the **STAT** command to check general controller status, the **RNCS** command to check NVSRAM status, the **RLS** command to check limit switch status, and so on. This chapter gives information on using these commands, interpreting the responses, and taking recovery actions.
- For problems you cannot solve, gather information and contact Brooks Automation Customer Support. Use the Aftermath Analysis form given at the end of this chapter.

Artisan Technology Group - Quality Instrumentation ... Guaranteed | (888) 88-SOURCE | www.artisantg.com

Troubleshooting Robot Start up

This procedure helps to troubleshoot problems at start up. Typical problems and error codes that you may see include:

- Robot will not start up
- The robot will not home
- The robot will not servo on

In these circumstances perform an aftermath analysis. The form for this is located in Aftermath Analysis on page 10-29

Robot Start Up Procedure.

Table 10-1: Stat for Robot Will Not Start Up Flow Chart

BIT	Definition (When set to 1)	Cleared by
0	Previous command not executed	Any
1	Previous command invalid	Any
2	Vacuum Sensor is activated	
3	Vacuum Switch is on	
4	Motor error on one or more axes	**SVON**
5	One or more limit switches triggered	**RLS**
6	One or more axes are not homed yet	**HOME A**
7	Error on last alignment	**ALIGN**
8	Running Macro	
9	One or more axes are moving	
10	Servo off on one or more axes	**SVON**
11	Error on COM2	**AST 2**
12	Not used (always 1)	
13	NV-SRAM error	**RNCS**
14	Controller error	Any
15	Error on COM1	**AST 1**

Artisan Technology Group - Quality Instrumentation ... Guaranteed | (888) 88-SOURCE | www.artisantg.com

Table 10-2: Input G for Robot Will Not Start Up Flow Chart

BIT	Definition
0	Amplifier Interconnection and Signal Cable Closed Loop
1	EMO
2	Stop Signal
3	Amplifier Board Under Power. Low if OK
4	Motor Power Supply indicator. Low if on
5	Robot Interface Power Supply indicator. Low if powered
6	Switcher indicator. Low if Switcher is on
7	Bus Power indicator. Low if all voltages are good

Artisan Technology Group - Quality Instrumentation ... Guaranteed | (888) 88-SOURCE | www.artisantg.com

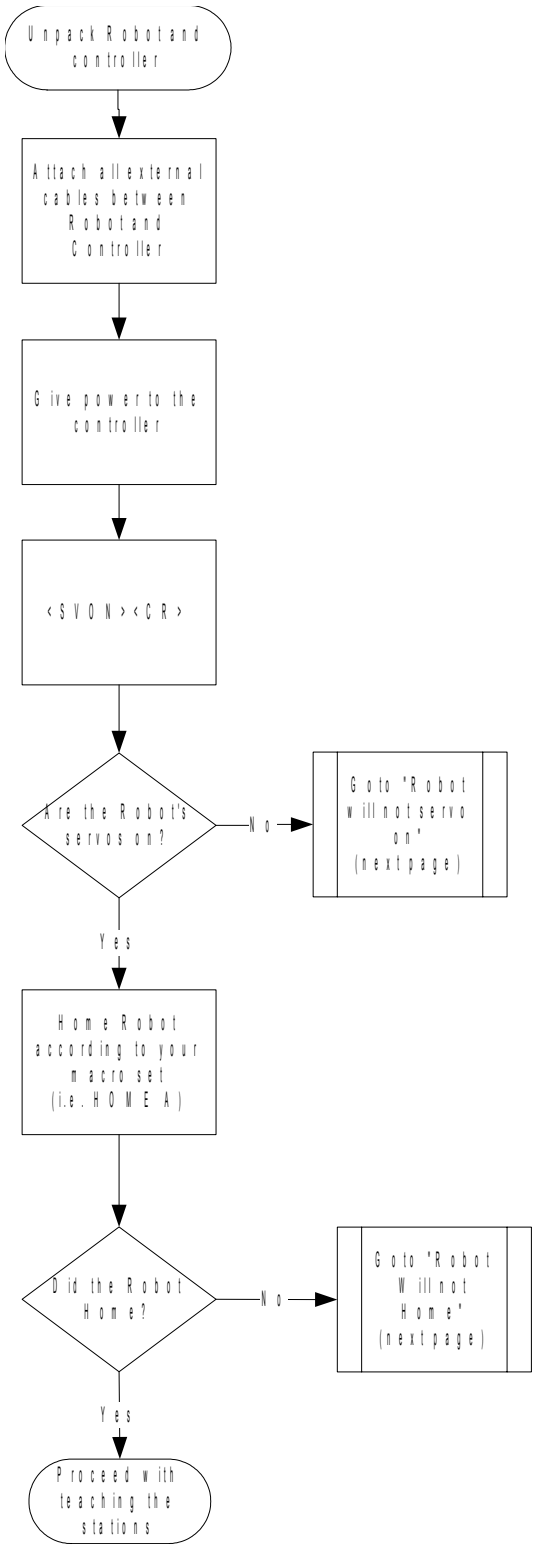

Figure 10-1: Robot Will Not Start Up Flow Chart

Artisan Technology Group - Quality Instrumentation ... Guaranteed | (888) 88-SOURCE | www.artisantg.com

Robot Will Not Home Procedure

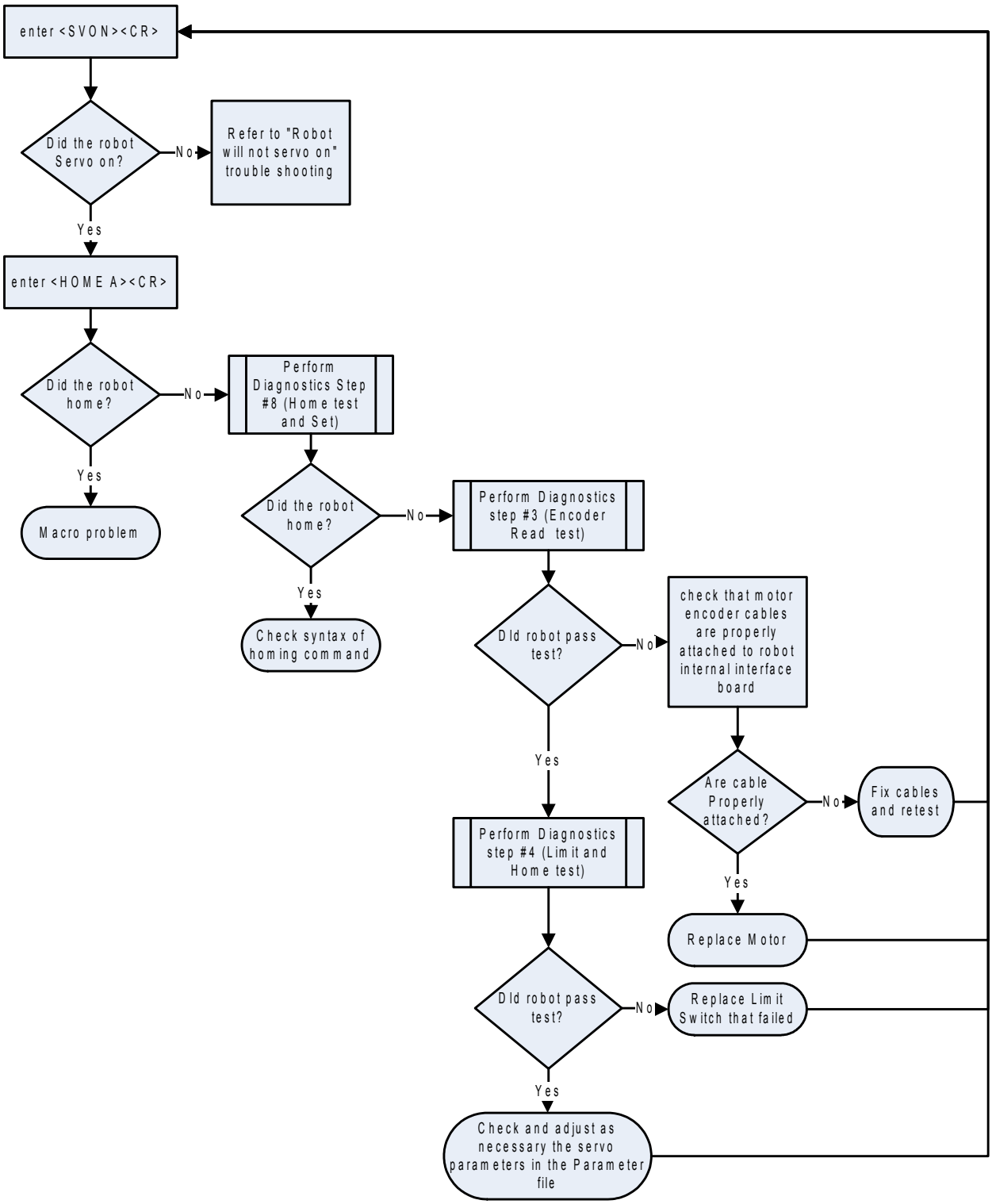

Figure 10-2: Robot Will Not Home Flow Chart

Artisan Technology Group - Quality Instrumentation ... Guaranteed | (888) 88-SOURCE | www.artisantg.com

Table 10-3: Stat for Robot Will Not Home Flow Chart

BIT	Definition (When set to 1)	Cleared by
0	Previous command not executed	Any
1	Previous command invalid	Any
2	Vacuum Sensor is activated	
3	Vacuum Switch is on	
4	Motor error on one or more axes	**SVON**
5	One or more limit switches triggered	**RLS**
6	One or more axes are not homed yet	**HOME A**
7	Error on last alignment	ALIGN
8	Running Macro	
9	One or more axes are moving	
10	Servo off on one or more axes	**SVON**
11	Error on COM2	**AST 2**
12	Not used (always 1)	
13	NV-SRAM error	**RNCS**
14	Controller error	Any
15	Error on COM1	**AST 1**

Table 10-4: Input G for Robot Will Not Home Flow Chart

BIT	Definition
0	Amplifier Interconnection and Signal Cable Closed Loop
1	EMO
2	Stop Signal
3	Amplifier Board Under Power. Low if OK
4	Motor Power Supply indicator. Low if on
5	Robot Interface Power Supply indicator. Low if powered
6	Switcher indicator. Low if Switcher is on
7	Bus Power indicator. Low if all voltages are good

Artisan Technology Group - Quality Instrumentation ... Guaranteed | (888) 88-SOURCE | www.artisantg.com

Robot Will Not Servo On

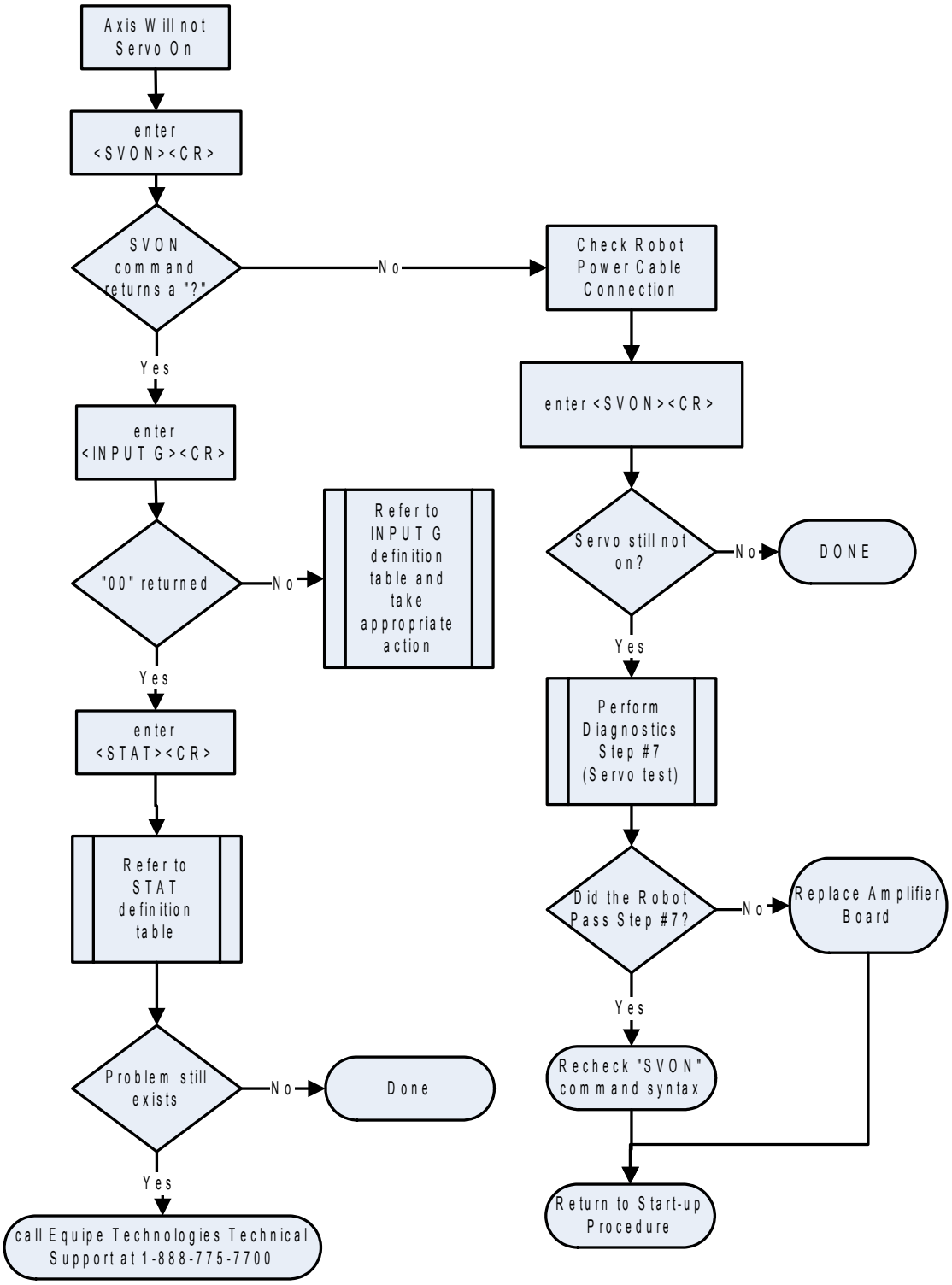

Figure 10-3: Robot Will Not Servo On Flow Chart

Artisan Technology Group - Quality Instrumentation ... Guaranteed | (888) 88-SOURCE | www.artisantg.com

Table 10-5: Stat for Robot Will Not Servo On Flow Chart

BIT	Definition (When set to 1)	Cleared by
0	Previous command not executed	Any
1	Previous command invalid	Any
2	Vacuum Sensor is activated	
3	Vacuum Switch is on	
4	Motor error on one or more axes	**SVON**
5	One or more limit switches triggered	**RLS**
6	One or more axes are not homed yet	**HOME A**
7	Error on last alignment	**ALIGN**
8	Running Macro	
9	One or more axes are moving	
10	Servo off on one or more axes	**SVON**
11	Error on COM2	**AST 2**
12	Not used (always 1)	
13	NV-SRAM error	**RNCS**
14	Controller error	**Any**
15	Error on COM1	**AST 1**

Artisan Technology Group - Quality Instrumentation ... Guaranteed | (888) 88-SOURCE | www.artisantg.com

Using the Teach Pendant and EQT 32 to Troubleshoot

As you follow the instructions, you might be asked to perform one or more Diagnostic steps. Instructions for using the Teach Pendant and EQT 32 to perform diagnostics are given in chapter 9. General instructions for using the Teach Pendant and EQT 32 are given in the *Smart Controller Hardware and Software User's Manual*.

Artisan Technology Group - Quality Instrumentation ... Guaranteed | (888) 88-SOURCE | www.artisantg.com

Common Problems

The two most-common problems are that the robot does not move or does not home.

If the robot is not *moving*, check the following:

- Is the power on? If not, connect it!
- Are the servo motors turned on? If not, use the **SVON** command.
- Is the robot homed? If not, use your homing macro or **HOME** command.
- Is the signal cable correctly connected? If not, correct it.

If the robot does not *home*, make sure the signal cable is correctly connected.

Artisan Technology Group - Quality Instrumentation ... Guaranteed | (888) 88-SOURCE | www.artisantg.com

Frequently Asked Questions

The following are frequently asked questions (FAQs) about maintaining the robot or robot system.

What do I do if I get a new robot?

To match the existing controller with a new robot:

1. The robot is delivered with a diskette that contains the robot parameter file. The parameter file is named xxxx.PAR, where xxx is the robot serial number. Download the parameter file to the controller.

2. To reset the controller, enter the command:
   RES
   Wait until the controller is ready.

3. To read the robot serial number, enter the command:
   RSRN

4. Compare the serial number returned from the command with the serial number on the robot body.

- If they are the same, the correct parameter file is resident on NVSRAM.
- If the serial numbers are different, use a text editor such as Notepad to verify that the parameter file on the diskette delivered with the robot is the same as the serial number on the robot body.
  - If the two serial numbers are the same, re-download the file from the diskette.
  - If the serial numbers are different, contact Brooks Automation Customer Support.

What do I do if I get a new controller?

To make sure that the controller and robot are compatible, load the correct parameter and macro files from the diskette that came with the robot or by uploading the files from the original controller.

1. To verify that the old controller is still communicating and the NVSRAM is functioning, enter the command:
   RNCS
   The controller responds 0000 if there are no NVSRAM problems.

2. Upload all files from the old controller to the PC for use or reference later.

Artisan Technology Group - Quality Instrumentation ... Guaranteed | (888) 88-SOURCE | www.artisantg.com

3. Download all required files (parameter, coordinate, wafer calibration files) to the new controller.

4. To restore the speed and acceleration to all axes, enter one or more RSA command with the applicable axis parameter, A, a, t, w, W.

5. To save the coordinates and parameters to NVSRAM, enter the command:
   SAV

6. Download the macro file.

7. To save the macros to NVSRAM, enter the command:
   SMCR

8. Re-teach the stations. The old coordinates will be close, but not exactly the same.

Artisan Technology Group - Quality Instrumentation ... Guaranteed | (888) 88-SOURCE | www.artisantg.com

Checking Robot Status

You can check various connections by sending information request commands to the controller or by using EQT 32 Information Request. The firmware recognizes the current axes and returns information for those axes.

Table 10-6: Commands to Check Connections

Command	Purpose
STAT	Send status word
AST 1	Check error status on communications port 1 (COM1)
AST 2	Check error status on communications port 2 (COM2)
GLST	Check status of the Galil motion control board
INPUT G	Read input port G
RLS	Read limit switches
RNCS	Read NVSRAM check-sum
ALST	Check Alignment status when **STAT** bit 7 is set to 1
VER	Read firmware version number

In EQT 32, select the Troubleshooting button. The Troubleshooting dialog is displayed. Select Information Request and press the Run button. Nine commands are executed and the results are displayed as text messages. Problems are highlighted with a red box.

Artisan Technology Group - Quality Instrumentation ... Guaranteed | (888) 88-SOURCE | www.artisantg.com

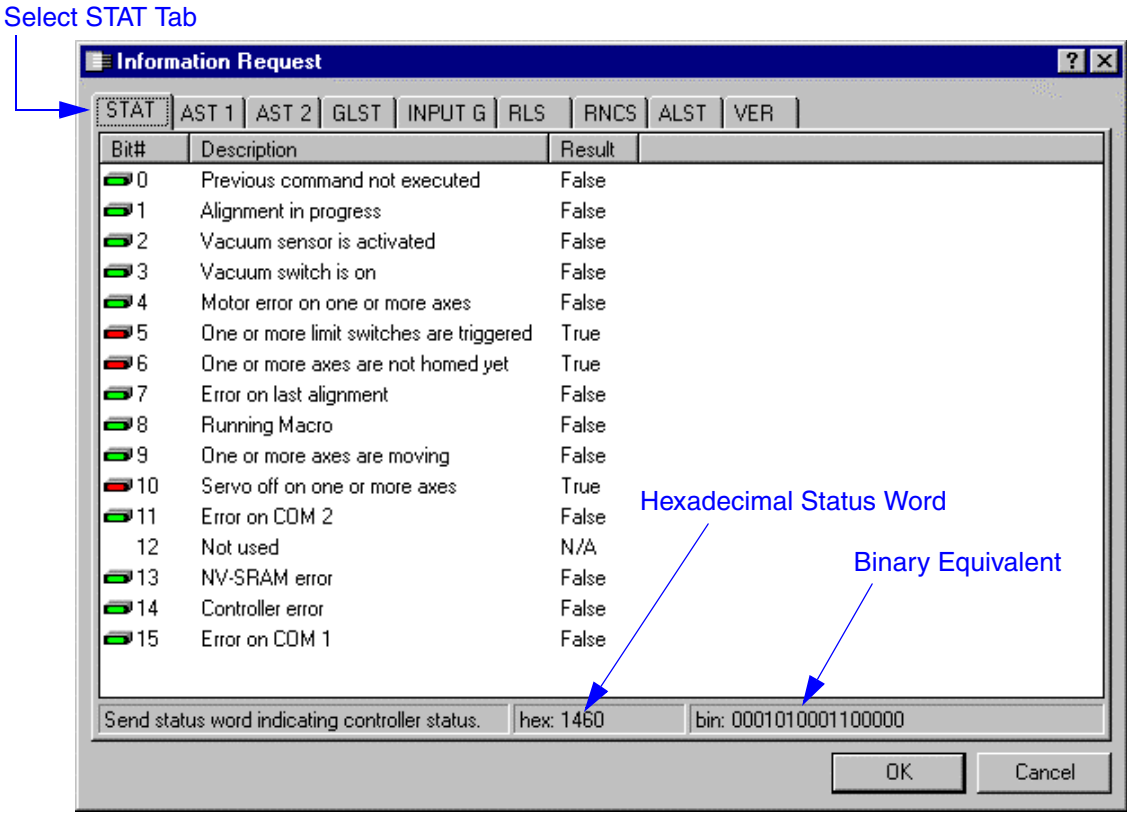

Figure 10-4: Information Request Results Box

Alternatively, you can send commands in Terminal mode from either a Teach Pendant or EQT 32. If you send the commands from the Teach Pendant, the response from the controller is displayed in hexadecimal format.

Using the STAT/STAT2 Command

The **STAT** command indicates general status of the controller, including motor error on a robot axis, in a 16-bit word. Bit 14 in the **STAT** response can indicate multiple errors. The **STAT2** command specifies the errors indicated in Bit 14 of the **STAT** response. **STAT2** is available in systems with a SEMI S2 compliant robot with speed interlock mapping. If you use **STAT2**, the response is given in two 16-bit words; the first word explains the controller error and the second word is the same as the `STAT` response defined here.

The setting of each status bit is caused by one or more reasons. Sometimes the cause is fatal and needs immediate action to recover, and sometimes the cause is harmless and does not require any direct action. The following table lists the probable cause of

Artisan Technology Group - Quality Instrumentation ... Guaranteed | (888) 88-SOURCE | www.artisantg.com

the problem and suggested recovery for each of the 16 status bits.

Table 10-7: Problem and Suggested Recovery for the 16 Status Bits

Bit	Message	Cause	Recovery
0	Previous command not executed	The command cannot be executed for the current condition. For example, a **SVON** command cannot execute while axes are moving. Also see Bit 2.	Review the command and the conditions.
1	Previous command invalid	The command is unknown or has invalid syntax. When Bit 1 is set to 1, Bit 0 is also set to 1.	Check command syntax.
2	Vacuum sensor is activated	Vacuum sensor is on; an object is detected. When Bit 2 is set to 1, Bit 3 should be 1 (vacuum switch is on). If Bit 2 is 1 regardless of presence of object or status of Bit 3, the vacuum sensor is too sensitive.	Adjust the vacuum sensor.
3	Vacuum switch is ON	A normal condition. For example, a **GET** or **PUT** command turns Bit 3 on.	None.
4	Motor error on one or more axes	One or more axes have a position error condition. Excessive force has been applied to the force generated by the motor. An obstacle might be in the robot path. Or, the Servo Error Limit (ER) is too small. Setting Bit 4 to 1 sets Bit 10 to 1.	Clear the obstacle, send the **SVON** command, and continue. If ER is too small (usually about 100-200), change the setup and increase.
5	One or more limit switches are triggered	There are two limit switches (positive and negative) for the T and Z axes. The **RLS** command shows detailed information on limit switches.	Send the **RLS** command to determine which limit switches are on or triggered and move away from them.
6	One or more axes are not homed yet	With this condition, the controller will not allow a **Move** command on the axes. Power up or disconnection of the signal cable sets this bit to 1.	HOME the robot and then HOME the pre-aligner and track, if present.
7	Pre-Aligner error on last alignment	Not used.	See **ALST** command.
8	A macro is running	The bit is set to 0 after the macro executes the last **ENDM** command.	Send the **STOP** command to stop all movement. This aborts the macro.
9	One or more axes are moving	Any Move command causes Bit 9 to be set to 1.	Send the **STOP** command.
10	Servo OFF on one or more axes	Bit 10 is set to 1 when **SVOF** is issued or a motor error condition is generated.	Send **SVON** command
11	Error on COM2	There are several possible causes. Use **AST 2** command for more information.	Sending **AST 2** usually clears Bit 11.
12	Not used	Not used. Bit 12 is always set to 1.	None

Artisan Technology Group - Quality Instrumentation ... Guaranteed | (888) 88-SOURCE | www.artisantg.com

Table 10-7: Problem and Suggested Recovery for the 16 Status Bits

Bit	Message	Cause	Recovery
13	NVSRAM error	Any of the following caused this: • NVSRAM is not installed • NVSRAM is not formatted. • The parameter file is corrupted. • The coordinate file is corrupted. • The macro file is corrupted or is an incompatible version.§	• Install NVSRAM • Format NVSRM (FRMT command) • Re-download the parameter file • Re-download the coordinate file or re-teach coordinates and send the **SAV** command • Re-download the macro file and send the **SMCR** command.§
	To determine the reason for the error and the recovery for NVSRAM problems, enter the **RNCS** command in the terminal mode and evaluate the response. See "Checking NVSRAM with **RNCS C**ommand" on page 92.		
14	Controller error	Internal controller error. The Galil board might be damaged or the jumper configuration is wrong for SEMI S2 speed interlock mapping.	Send another **STAT**. If it does not clear Bit 14, check jumper settings. If not cleared, send **RES** command.
15	Error on COM1	There are several possible causes. Use **AST 1** command for more information.	Sending **AST 1** usually clears the bit.

Artisan Technology Group - Quality Instrumentation ... Guaranteed | (888) 88-SOURCE | www.artisantg.com

Checking NVSRAM with RNCS Command

The NVSRAM chip on the CPU board stores variable information in parameter, coordinate, and macro files. The controller uses checksum to determine if the files are corrupt. The controller can also verify the general functionality of the NVSRAM chip. When you send the **RNCS** command, you receive the following information in a 16-bit status word.

Table 10-8: Information in a 16-bit Status Word for Command RNCS

Bit No.	Message	Recovery
0	Checksum error on parameter file	Re-download the parameter file using the **WRIP** command.
1	Checksum error on coordinate file	• Use the **RES** command to reset the controller. • Use the **SPC** command for each station to re-download coordinates. • Use **RSA** to restore speed and acceleration. • Use SAV to save the parameters.
2	Checksum error on macro file	Re-download the macro file use **SMCR** to save the macros to NVSRAM.
3-14	Not used	Bits 3 through 14 are always set to 0.
15	NVSRAM is not formatted or does not exist	Reformat the existing NVSRAM chip and re-download all files. If a problem still exists, reformat and re-download all files.

For example, if the NVSRAM is not formatted, non-functional, not in place, or unformatted after installing a new NVSRAM, the **RNCS** command returns the status word 8007. This means that bits 0, 1, 2, and 15 are set to 1.

To recover from NVSRAM failure, download the files that are stored on the host computer, using the EQT interface to upload and download files. To ensure that the stored files are your most current files:

1. Upload a copy of the parameter files of each robot when you receive them.

2. Upload all macros to the host computer.

3. After teaching all stations, upload the coordinate files to your host computer.

4. Whenever you edit the macro file, upload the *.mac file to your host computer.

Artisan Technology Group - Quality Instrumentation ... Guaranteed | (888) 88-SOURCE | www.artisantg.com

Checking Limit Switch Status with the RLS Command

Limit switches prevent over-travel of the robot into the hard stops of each axis of motion, and are normally activated just prior to contact with the hard stops. The limit switches signal the Galil board to kill power to the motor and stop the motion. In normal operation, the robot should not move into the limit switch area. Limit switches are also used to home the axes.

The limit switches are optical emitter-detector switches. The T and R axes use diode and transistor-type limit switches. The Z axis uses an amplifier-type sensor with open collector output and output polarity selection.

If you disconnect a switch from the robot internal interface board switch, input will read as active.

Limit switch problems can be caused by software, mechanical position setup, or hardware. To determine if limit switch hardware is functional, perform Diagnostic Step 4, the Limit & Home Test.

If the robot fails because a limit switch was triggered (Bit 5 in the response to the STAT command), use the **RLS** command to determine which limit switch was activated.

The response to **RLS** has the following bit assignments for 6.0+ firmware and firmware previous to 6.0. Note that bits 3, 7, 11, 15, 19, 23, 27, and 31 vary by the type of component and number of axes—a three-axis system (3), a four-axis system (4) or a six- or eight-axis system (8). For a three-axis system, a robot-only system, a 16-bit word is returned**. For 6.0+ firmware**, the bits for a robot-only system are standard with the bits listed in this table. **For earlier firmware**, the bits for a robot-only system are defined in the second table to follow.

Artisan Technology Group - Quality Instrumentation ... Guaranteed | (888) 88-SOURCE | www.artisantg.com

Table 10-9: Bit Comparison Between 6.0+ Firmware and Earlier Versions

Bit	Meaning when set to 1 in 6.0+ firmware	Meaning when set to 1 in earlier firmware
0 1 2 3	Robot positive T Robot positive R Robot positive Z Track positive W (4) 1-axis pre-aligner positive W (4) Flipper positive W (4) Flipper positive W (8)	Robot positive T Robot positive R Robot positive Z Track positive t (4) 1-axis pre-aligner positive t (4) Flipper positive t (4) Flipper positive W (8)
4 5 6 7	Pre-aligner positive t Pre-aligner positive r Pre-aligner positive z Track positive w (8)	Pre-aligner positive t Pre-aligner positive r Pre-aligner positive z Track positive w (8)
8 9 10 11	Robot negative T Robot negative R Robot negative Z Track negative W (4) 1-axis pre-aligner negative W (4) Flipper negative W (4) Flipper negative W (8)	Robot negative T Robot negative R Robot negative Z Track negative t (4) 1-axis pre-aligner negative t (4) Flipper negative t (4) Flipper negative W (8)
12 13 14 15	Pre-aligner negative t Pre-aligner negative r Pre-aligner negative z Track negative w (8)	Pre-aligner negative t Pre-aligner negative r Pre-aligner negative z Track negative w (8)
16 17 18 19	Robot positive T triggered Robot positive R triggered Robot positive Z triggered Track positive W triggered (4) 1-axis pre-aligner pos W trig. (4) Flipper positive W triggered (4) Flipper positive W triggered (8)	Robot positive T triggeredRobot positive R triggeredRobot positive Z triggeredTrack positive t triggered (4)1-axis pre-aligner pos t trig. (4)Flipper positive t triggered (4)Flipper positive W triggered (8)
20 21 22 23	Pre-aligner positive t triggered P re-aligner positive r triggered re-aligner positive z triggered Track positive w triggered (8)	Pre-aligner positive t triggered Pre-aligner positive r triggered Pre-aligner positive z triggered Track positive w triggered (8)
24 25 26 27	Robot negative T triggered Robot negative R triggered Robot negative Z triggered Track negative W triggered (4) 1-axis pre-aligner neg W trig. (4) Flipper negative W triggered (4 Flipper negative W triggered (8)	Robot negative T triggered Robot negative R triggered Robot negative Z triggered Track negative t triggered (4) 1-axis pre-aligner neg t trig. (4) Flipper negative t triggered (4) Flipper negative W triggered (8)

Artisan Technology Group - Quality Instrumentation ... Guaranteed | (888) 88-SOURCE | www.artisantg.com

Table 10-9: Bit Comparison Between 6.0+ Firmware and Earlier Versions

Bit	Meaning when set to 1 in 6.0+ firmware	Meaning when set to 1 in earlier firmware
28	Pre-aligner negative t triggered	Pre-aligner negative t triggered
29	Pre-aligner negative r triggered	Pre-aligner negative r triggered
30	Pre-aligner negative z triggered	Pre-aligner negative z triggered
31	Track negative w triggered (8)	Track negative w triggered (8)

For a Robot-Only System in earlier firmware, the Galil board controls three axes, T, R, and Z. The 16-bit word response to the RLS command is defined in the following table.

*Table 10-10: 16 Bit Response to Firmware Earlier that 6.0 to the **RLS** Command*

Bit	Meaning when bit is set to 1 in pre-6.0 firmware
0	Robot positive T
1	Robot positive R
2	Robot positive Z
3	Robot negative T
4	Robot negative R
5	Robot negative Z
6	Robot positive T triggered
7	Robot positive R triggered
8	Robot positive Z triggered
9	Robot negative T triggered
10	Robot negative R triggered
11	Robot negative Z triggered
12-15	Reserved

When a limit switch is triggered during robot operation, the robot stops its motion and returns an error message. In this situation you should:

1. Send the **RLS** command to determine which switch was triggered.

2. Send the **RLS** command again to determine if the switch is still active.

3. If the limit switch remains on after the second **RLS** command, the robot is probably at its travel limit. Manually move it away from this limit. Send the **RLS** command again. If it clears, it is likely that the robot was instructed by software to go too close to the limit.

This can occur even during teaching, if the position taught was beyond the limit. This

Artisan Technology Group - Quality Instrumentation ... Guaranteed | (888) 88-SOURCE | www.artisantg.com

can also be caused by:

- Robot overshoot. The robot goes slightly beyond its taught position as it decelerates at the end of a motion in a given axis and then returns to its designated position.
- A stroke entered for a Z motion in a pickup place is too large. The taught position is within the robot range, but the stroke requires the robot to enter the limit switch area.

To resolve these problems:

1. Change the taught position. This might require physically moving the station to a position farther away from the limit.

2. If the problem occurs at the first or last slot of a cassette and the vertical axis shuts down, reduce the stroke and/or vertical offsets.

3. To minimize robot overshoot on deceleration, decrease the speeds and accelerations.

4. If the **RLS** command you sent after changing the robot position cleared all bits, this indicates a problem in the limit switch assembly. The robot might need to be serviced. Call Brooks Automation Customer Support for assistance.

Artisan Technology Group - Quality Instrumentation ... Guaranteed | (888) 88-SOURCE | www.artisantg.com

Using the GLST Command

The Galil motion control board status is given in a 32-bit double word. For a four-axis system, bits 12 to 15, 20 to 23, and 28 to 31 are zeros.

The response to **GLST** has the following bit assignments for 6.0+ firmware and firmware previous to 6.0. Note that bits 11, 15, 19, 23, 27, and 31 vary by the type of component and number of axes— a three-axis system (3), a four-axis system (4) or a six- or eight-axis system (8). For a three-axis system, a robot-only system, a 16-bit word is returned**. For 6.0+ firmware**, the bits for a robot-only system are standard with the bits listed in this table. **For earlier firmware**, the bits for a robot-only system are defined in the second table to follow.

Table 10-11: Response to the GLST Command in 6.0+ Compared to Earlier Versions

Bit	Meaning when bit is set to 1 in 6.0+ firmware	Meaning when bit is set to 1 in earlier firmware
0	Card 0 time out	Read/write timeout
1	Card 0 responds with an error	Responds with an error prompt
2	Card 0 write data error	Board is in debug mode
3	Card 0 debug mode active	Galil command error
4	Card 1 time out	Integrator output exceeds torque limit
5	Card 1 responds with an error	Always 0
6	Card 1 write data error	Always 0
7	Card 1 debug mode active	Always 0
8	Position error on T axis	Position error on T axis
9	Position error on R axis	Position error on R axis
10	Position error on Z axis	Position error on Z axis
11	Position error on track W (4) Pos err on 1-axis pre-aligner W (4) Position error on flipper W (4) Position error on flipper W (8)	Position error on track t (4) Pos err on 1-axis pre-aligner t (4) Position error on flipper t (4) Position error on flipper W (8)
12	Position error on t axis	Position error on t axis
13	Position error on r axis	Position error on r axis
14	Position error on z axis	Position error on z axis
15	Position error on w axis (8)	Position error on w axis (8)
16	T axis motion complete	T axis motion complete
17	R axis motion complete	R axis motion complete
18	Z axis motion complete	Z axis motion complete
19	Track W motion complete (4) 1-axis pre-aligner W motn comp (4) Flipper W motion complete (4) Flipper W motion complete (8)	Track t motion complete (4) 1-axis pre-aligner t motn comp (4) Flipper t motion complete (4) Flipper W motion complete (8)
20	t axis motion complete	t axis motion complete
21	r axis motion complete	r axis motion complete
22	z axis motion complete	z axis motion complete
23	Track w motion complete (8)	Track w axis motion complete (8)

Artisan Technology Group - Quality Instrumentation ... Guaranteed | (888) 88-SOURCE | www.artisantg.com

Table 10-11: Response to the GLST Command in 6.0+ Compared to Earlier Versions

Bit	Meaning when bit is set to 1 in 6.0+ firmware	Meaning when bit is set to 1 in earlier firmware
24 25 26 27	T axis servo off R axis servo off Z axis servo off Track W axis servo off (4) 1-axis pre-aligner W servo off (4) Flipper W axis servo off (4) Flipper W axis servo off (8)	T axis servo off R axis servo off Z axis servo off Track t axis servo off (4) 1-axis pre-aligner t servo off (4) Flipper t axis servo off (4) Flipper W axis servo off (8)
28 29 30 31	t axis servo off r axis servo off z axis servo off Track w axis servo off (8)	t axis servo off r axis servo off z axis servo off Track w axis servo off (8)

For a Robot-Only system in earlier firmware, the Galil board controls three axes, T, R, and Z. The 16-bit word response to the **GLST** command is defined in the following table.

*Table 10-12: **GLST** Command Response for Firmware Earlier that 6.0*

Bit	Meaning when bit is set to 1 in pre-6.0 firmware
0 1 2 3	Read/write timeout Responds with an error Board is in debug mode Galil command error
4 5 6 7	Reserved Position error on robot T axis Position error on robot R axis Position error on robot Z axis
8 9 10 11	Robot T axis motion complete Robot R axis motion complete Robot Z axis motion complete Robot T-axis servo off
12 13 14 15	Robot R-axis servo off Robot Z-axis servo off Reserved Reserved

Artisan Technology Group - Quality Instrumentation ... Guaranteed | (888) 88-SOURCE | www.artisantg.com

Problem Causes and Suggested Actions

The Code column indicates bit(s) from **STAT** response that are set to 1. Getting the corresponding **STAT** response confirms the symptom you have observed.

Table 10-13: Troubleshooting Communication

Symptom	Possible Cause	Code	Corrective Action
Exhaust fan not running	No AC power		Check power cord and fuses
No beep sound from CPU	EPROMs improperly installed		Order new EPROMs and place them properly. Sockets are 32-pin JEDEC standard. Ensure correct jumper setup
	Loose board(s)		Remove all boards except the amplifier board. Replace them securely.
	Bad CPU board		Replace CPU board.
LEDs on amplifier board not lit	Bad EPROMs or EPROMs improperly installed		Order new EPROMs and place them properly. Sockets are 32-pin JEDEC standard. Ensure correct jumper setup.
	Loose board(s)		Remove all but amplifier board and replace them on the bus while securing their connection.
Other	Wrong RS-232 cable		Check RS-232 cable

Table 10-14: Troubleshooting Axis Cannot Servo

Symptom	Possible Cause	Code	Corrective Action
Response to **SVON** command is "?"	Unsecured connection(s) of signal cable(s)	Bits 0 and 10	Check external signal cable. Send **INPUT G** command and check output response. It should be 0.
	Other		Send **ABM** command. Try to servo-on again.
	Response to **ABM** command is "?"	Bits 0, 10, and 14	Check Galil jumpers. Replace Galil board.

Artisan Technology Group - Quality Instrumentation ... Guaranteed | (888) 88-SOURCE | www.artisantg.com

Table 10-14: Troubleshooting Axis Cannot Servo

Symptom	Possible Cause	Code	Corrective Action
SVON command OK but no power to motor(s)	Unsecured connection of external power cable (usually no servo to any motors)		Secure cable connections
	Bad amplifier module(s) (usually only one of the three motors)		Replace amplifier board (use Diagnostics step #7 to determine the failing axis).

Table 10-15: Troubleshooting Axis Cannot HOME

Symptom	Possible Cause	Code	Corrective Action
Axis moves but stops at its negative hard stop and loses servo	Limit switch is not working	Bits 4 and 10	Perform diagnostics step #4 to determine the failing limit switch. Replace limit switch assembly. If problem persists, replace flex-PCB.
Axis moves but stops at random position and retains servo	Intermittent false-positive signal generated by home switch	Bit 5	Send **RLS** to determine which axis. Replace limit switch assembly.
Axis moves but stops at random position and loses servo	Servo is too weak	Bits 4 and 10	Check servo parameters (**GN**, **TL**, and **ER**). Increase associated parameters.
Axis moves but stops at certain position range and loses servo	Mechanical friction is too high	Bits 4 and 10	Check all transmissions along the axis. Make sure belts are not too tight and bearings move smoothly.
Axis moves but stops at its positive hard stop	Home switch is active all the time	B5, B9	Send **RLS** to determine which axis. Replace limit switch assembly.
Axis does not move at all	Positive and Home switches are active all the time	Bits 5 and 9	Send **RLS** to determine which axis. Replace limit switch assembly.

Artisan Technology Group - Quality Instrumentation ... Guaranteed | (888) 88-SOURCE | www.artisantg.com

Table 10-16: Troubleshooting Robot Stops During Normal Operation

Symptom	Possible Cause	Code	Corrective Action
Axis stops at random position but retains servo	False -positive signal generated by limit switch	Bit 5	Send **RLS** to determine which axis. Replace limit switch assembly.
Axis stops at random position and loses servo	Speed is too fast for error limit setup	Bits 4 and 10	Increase error limit setup
	False -positive signal generated by limit switch	Bits 4, 5, and 10	Send **RLS** to determine which axis. Replace limit switch assembly.
Axis stops when it comes in contact with an object, such as a wafer	Mechanical friction is too high	Bits 4 and 10	Check all transmissions along the axis. Make sure belts are not too tight and bearings move smoothly.
Robot stops when it comes in contact with an object, such as a wafer	Excessive electrostatic discharge or EMI to robot	Bit 14	Re-route each-grounding and proper shielding.
	Robot hits the object	Bits 4 and 10	Re-teach robot.

Table 10-17: Troubleshooting Repeatability Problems

Symptom	Possible Cause	Code	Corrective Action
Axis position drifting over time	Worn-out belts		Inspect belts, and replace if necessary.
	Loose transmission shaft		Inspect shaft by rotating pulley manually while servo is on.
	Bad Encoder		Use oscilloscope to test the Encoder output signal.
Axis position slightly different from the last time stations were taught. The difference is consistent from one station to another.	Slipped belt(s)		Inspect belts for loose adjustment. Perform Diagnostic Step 8 to ensure the distance from the home switch and encoder index is within the allowable range. For the R-axis, also perform Step 9 to re-calibrate the Home offset. Then re-teach the stations.
	Encoder index set too close to home switch		Reset index.

Artisan Technology Group - Quality Instrumentation ... Guaranteed | (888) 88-SOURCE | www.artisantg.com

Table 10-17: Troubleshooting Repeatability Problems

Symptom	Possible Cause	Code	Corrective Action
Axis position different after every HOME sequence	Intermittent limit switch problem	Bit 5	Send **RLS** to determine which axis. Replace limit switch assembly.

Table 10-18: Troubleshooting Lost Station Values

Symptom	Possible Cause	Code	Corrective Action
Robot loses taught stations after power-on cycle. After power-on cycle, robot does not move to previously taught stations	NVSRAM failure	Bit 13	Try to reformat NVSRAM. If successful, re-download PAR and Macro files, and then re-teach stations. Otherwise, try with new NVSRAM. Ensure correct jumper setup.

Table 10-19: Troubleshooting Erratic Movement

Symptom	Possible Cause	Code	Corrective Action
Robot performs normally but an axis jumps unpredictably to its hard stop (negative or positive)	Bad Encoder		Perform Encoder test (Diagnostics Step 3). Replace Encoder if required.
	Bad amplifier module (especially after Controller box passes warm-up period)	Bits 4 and 10	Perform Encoder test (Diagnostics step #3) to make sure it is NOT an Encoder problem. If the Encoder is OK, replace the amplifier module.
	Excessive noise to Galil board or bad Galil board	Bit 14	Send Galil command. You must receive "." Response. Press Enter several times. If you receive ">" response, replace Galil board. If problem persists, re-route grounding and proper shielding.
	Interrupted Encoder signal		Replace flex-PCB.

Artisan Technology Group - Quality Instrumentation ... Guaranteed | (888) 88-SOURCE | www.artisantg.com

Aftermath Analysis

An aftermath analysis is based on information from the controller. To collect relevant information immediately after a robot failure, send the commands listed in the first column and record the responses in the second column. Do not reset the controller, power off, or send any commands other than those listed. Send the commands in the order listed. Send your Aftermath Analysis to Brooks Automation for use in troubleshooting.

For your convenience, make copies of the Aftermath Analysis form for later use.

Artisan Technology Group - Quality Instrumentation ... Guaranteed | (888) 88-SOURCE | www.artisantg.com

Commands to send	Response
DMPAS 1 For version 3.xx only, write down the last 5 non-blank lines in the same order as they appear.	1._____ 2._____ 3._____ 4._____ 5._____
RMCS	_____
RLN	_____
STAT	_____
RLS	_____
RCP A	_____,_____,_____
RNCS	_____
RGN A	_____,_____,_____
RZR A	_____,_____,_____
RKI A	_____,_____,_____
RFA A	_____,_____,_____
RTL A	_____,_____,_____
RER A	_____,_____,_____
RSP A	_____,_____,_____
RAD A	_____,_____,_____
RSA A	Restore speed and acceleration
RSP A	_____,_____,_____
RAD A	_____,_____,_____
? D,[R20]	_____
? D,[R21]	_____
GALIL	Go to Galil mode
TE	_____,_____,_____
TS	_____,_____,_____
^I	Return from controller mode

Artisan Technology Group - Quality Instrumentation ... Guaranteed | (888) 88-SOURCE | www.artisantg.com

Contact Brooks Automation Technical Support

Even the most reliable products require service and support. To help you receive the most value from our Specialists, have the following information ready before you contact Brooks Automation Technical Support.

1. Record the serial numbers from the following components:
   Atmospheric Single-Arm Robot
   Smart Controller
   Atmospheric Pre-aligner (if installed)

2. Provide the location of the product.

3. Provide the name of the person to contact, e-mail address, and telephone number.

4. List any error codes received during the failure.

5. Prepare a detailed description of the events leading up to the error.

   How long has the equipment been in operation?
   Was any work done on the equipment prior to the error?
   What command was the equipment performing when the error occurred?
   List all actions taken after the error was performed. What were the results of those actions?
   Is than any other information that may assist our Specialist?

6. Contact Brooks Automation Technical Support:

   Tel: +1 (978) 262-2900
   Fax: +1 (978) 262-2500
   e-mail: tscallcenter@brooks.com

Artisan Technology Group - Quality Instrumentation ... Guaranteed | (888) 88-SOURCE | www.artisantg.com

Artisan Technology Group - Quality Instrumentation ... Guaranteed | (888) 88-SOURCE | www.artisantg.com

11 Appendices

Overview

The following appendices are included to provide the user with a single location for specific information related to the Brooks Automation Atmospheric Single-Arm Robot.

Contents

Appendix A: Factory Default Settings 11-2

Appendix B: Approved Laser Scanners 11-3
Available Configurations of the HAMA Laser Sensors 11-4

Artisan Technology Group - Quality Instrumentation ... Guaranteed | (888) 88-SOURCE | www.artisantg.com

Appendix A: Factory Default Settings

The internal operation is detailed in the following table for Operation mode and Teach mode.

Table 11-1: Operational and Teach Mode

Operation Mode	Teach Mode
EMERGENCY STOP switch is patched through as a passive electro-mechanical switch, J4 pins 1 and 2 (DB15 pins 2, 10).	EMERGENCY STOP switch is patched through as a passive electro-mechanical switch, J4 pins 1 and 2 (DB15 pins 2, 10).
Teach Pendant serial lines patched through to the modular jack. 12V power line is disconnected so the terminal will not operate.	Teach Pendant serial lines patched through to the modular jack. 12V power line connected so the terminal will operate.
Host control transmit serial line (TX) is connected to the robot controller serial receive line (RX).	Host control transmit serial line (TX) is disconnected from the robot controller serial receive line (RX), disabling all other control consoles.
Interlock current path is routed from +24V through J6 pin 1 (DB15 pin 4) to all interlock switches in series back through J6 pin 2 (DB15 pin 12). The signal is then routed through the EMERGENCY STOP loop, then to the I/O board M_OFF line, and finally to ground. If any of the interlock switches are open or any Emergency Stop devices are activated, then M_OFF goes active, disconnecting power to all PWM amplifiers and the laser scanner.	Interlock current path is routed from +24V through the Teach Pendant dead man buttons; the safety curtain/interlock switches are now cut out of the loop. The signal is then routed through the EMERGENCY STOP loop, then to the I/O board M_OFF line, and finally to ground. If both dead man switches are opened or any Emergency Stop devices are activated, then M_OFF goes active, disconnecting power to all PWM amplifiers and the laser scanner.

Artisan Technology Group - Quality Instrumentation ... Guaranteed | (888) 88-SOURCE | www.artisantg.com

Appendix B: Approved Laser Scanners

The specifications for several approved laser scanners are listed in the following table. For questions about additional laser scanners, contact your Brooks Automation sales representative.

All models listed in the table are Class 1. The WX scanners are original Class 1 from HAMA.

Model	**Laser Medium**	**Wavelength (Nanometer)**	**Average Power (milliwatts @ aperture)**	**Average Power (milliwatts per CRDH @ 20 cm)**	**Average Power** (milliwatts per IEC825 @ 10 cm)
DX40	AIGaAs	800	2 x 2.4	1.2	1.8
DX40P	AIGaAs	800	2 x 2.4	1.2	1.8
DX40S	AIGaAs	800	2 x 2.4	1.3	1.8
DD50	AIGaAs	800	2 x 2.4	1.7	2.2
DD50P	AIGaAs	800	2 x 2.4	1.7	2.2
WX40PI	AIGaAs	800	2 x 2.4	0.6	1.2
WX43PI	AIGaAs	800	2 x 0.2	0.05	0.1
Model	**Pulse characteristics**			**Beam divergence**	
	Duration (µs)	**Pulse Energy (microJoules)**	**Pulse Frequency (Kilo Hertz)**	**Horizontal (degrees)**	**Vertical (degrees)**
DX40	50	0.24	10	6.1	2.1
DX40P	50	0.24	10	6.1	2.1
DX40S	50	0.24	10	6.1	2.1
DD50	50	0.24	10	5.1	1.5
DD50P	50	0.24	10	5.1	1.5
WX40PI	50	0.24	10	7.5	2.1
WX43PI	50	0.02	10	7.5	2.1
Model	**Beam Diameter @ Aperture**		**Beam Diameter @ Focus**		**Sensing Distance (mm)**
	Horizontal (mm)	**Vertical (mm)**	**Horizontal (mm)**	**Vertical (mm)**	
DX40	8.6	2.9	0.4	0.4	38.1
DX40P	8.6	2.9	0.4	0.4	38.1
DX40S	8.6	2.9	0.4	0.4	45.7
DD50	9.0	2.6	0.4	0.4	45.7
DD50P	9.0	2.6	0.4	0.4	45.7
WX40PI	10.6	2.9	8.0	0.4	38.1
WX43PI	10.6	2.9	8.0	0.4	38.1

Artisan Technology Group - Quality Instrumentation ... Guaranteed | (888) 88-SOURCE | www.artisantg.com

Available Configurations of the HAMA Laser Sensors

Brooks Automation provides three series of Hama Laser Sensors, for the purpose of mapping wafer cassettes. These include the DD Series, DX Series and the WX Series. Each series may be made up of one or more models with various options available. The series, model and options can be determined from the Hama part number.

Table 11-2: Hana Laser Sensor Model Numbers and Options

Model	Description	Available Options
DD-50	Reflective Photoelectric Laser, "Dual Beam" Type, Two Receiver, Focal Point 1.8", Laser 800nm, 2 x 2.4mW, Class IIIb	S = High Sensitivity D = Delay R = Remote Gain P = Positive Enable
DD-51	Reflective Photoelectric Laser, "Dual Beam" Type, Two Receiver, Focal Point 1.8", Laser 670nm, 2 x 2.4mW, Class IIIa	S = High Sensitivity D = Delay R = Remote Gain P = Positive Enable
DX-40	Reflective Photoelectric Laser, "Dual Beam" Type, Three Receiver, Focal Point 1.5", Laser 800nm, 2 x 2.4mW, Class IIIb	S = High Sensitivity D = Delay R = Remote Gain P = Positive Enable
DX-41	Reflective Photoelectric Laser, "Dual Beam" Type, Three Receiver, Focal Point 1.5",Laser 670nm, 2 x 2.4mW, Class IIIa	S = High Sensitivity D = Delay R = Remote Gain P = Positive Enable
WX-40	Reflective Photoelectric Laser, "Dual and Wide Beam" Type, Three Receiver, Focal Point 1.5", Laser 800nm, 2 x 2.4mW, Class IIIb	D = Delay R = Remote Gain P = Positive Enable
WX-42	Reflective Photoelectric Laser, "Dual and Wide Beam" Type, Three Receiver, Focal Point 1.5", Laser 800nm, 2 x 2.4mW, Class II	D = Delay R = Remote Gain P = Positive Enable
WX-43	Reflective Photoelectric Laser, "Dual and Wide Beam" Type, Three Receiver, Focal Point 1.5", Laser 800nm, 2 x 2.4mW, Class I	D = Delay R = Remote Gain P = Positive Enable

Each of the laser sensors contains a bank of three dip-switches and a variable potentiometer.

- Switch #1: Low/High Gain Switch. This is used in conjunction with the variable potentiometer to adjust the unit sensitivity.

Artisan Technology Group - Quality Instrumentation ... Guaranteed | (888) 88-SOURCE | www.artisantg.com

- Switch #2: Light On/Dark On. In Light On mode, the OUT signal is triggered when the sensor detects an object. In Dark On mode, the OUT signal is triggered when there is no object detected.
- Switch #3: Remote Off/On. In Remote Off, the laser will emit radiation whenever +VCC and GND are correctly applied. In Remote On the sensor requires a separate "Enable" signal along with +VCC and GND to operate.

Artisan Technology Group - Quality Instrumentation ... Guaranteed | (888) 88-SOURCE | www.artisantg.com

This Page Intentionally Left Blank

Artisan Technology Group - Quality Instrumentation ... Guaranteed | (888) 88-SOURCE | www.artisantg.com

12 Drawings

Overview

This section provides wiring schemetics of some of the parts of the Brooks Automation Atmospheric single-arm Robot. These documents are provided to allow service personnel to identify specific parts within the product.

All drawings and other related documents provided with this manual are generic and may not reflect specific builds of the product.

CAUTION

This manual and the documents supplied with it are not controlled. Changes may have been made, or additional drawings added, to the supplied documentation. To verify the latest revisions or to obtain a current set of drawings and documents, contact Brooks Automation Customer Support.

Contents

Artisan Technology Group - Quality Instrumentation ... Guaranteed | (888) 88-SOURCE | www.artisantg.com

The following drawing is for the SEMI S2 I/O Version 3 board.

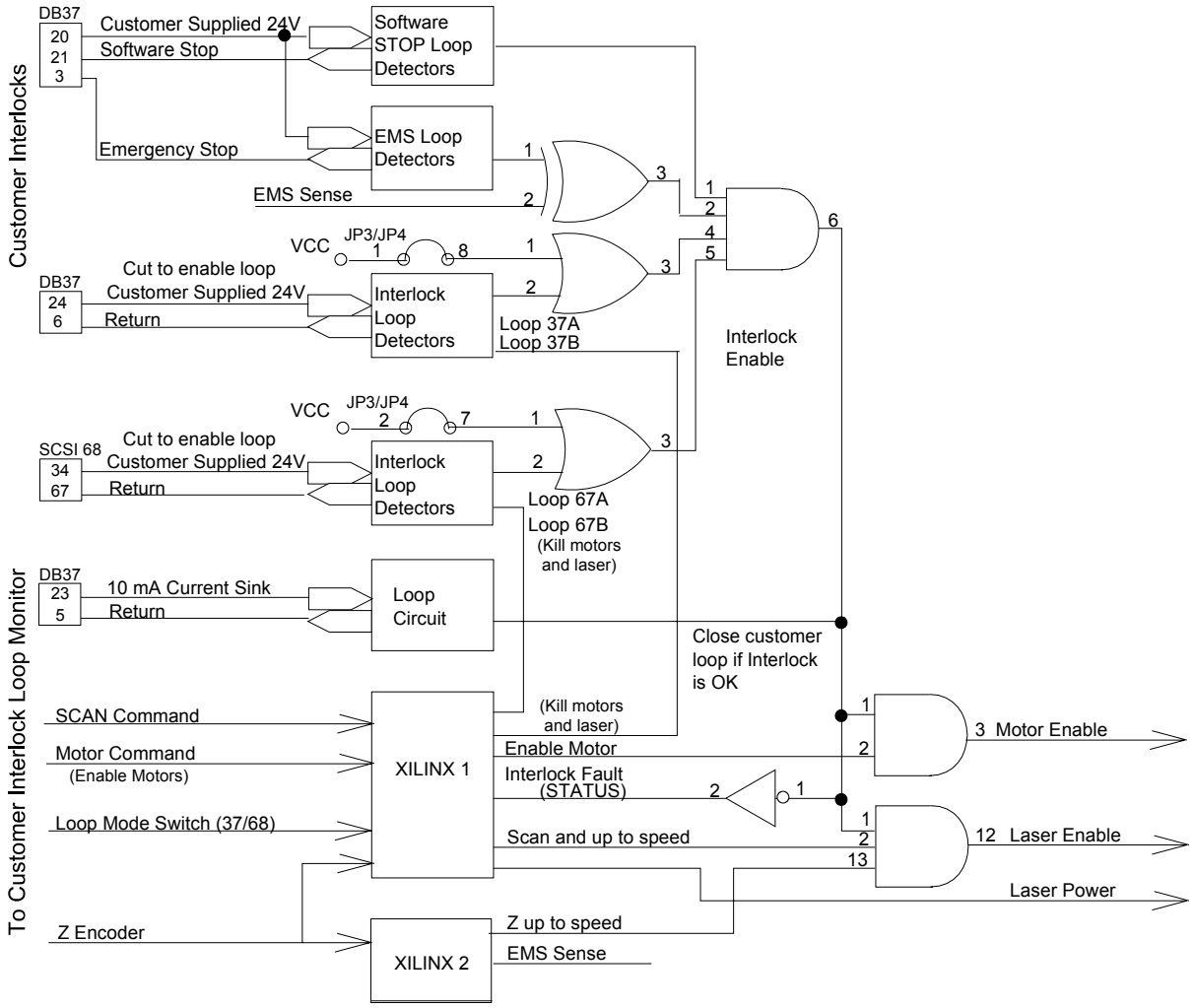

Figure 12-1: I/O Version 3 Schematic

Artisan Technology Group - Quality Instrumentation ... Guaranteed | (888) 88-SOURCE | www.artisantg.com

The next two schematics show the connections for the TTR-200 Teach Pendant. Brooks Automation recommends that you use the default DB37 configuration, the first schematic, or alternatively, the DB68 configuration, the second schematic.

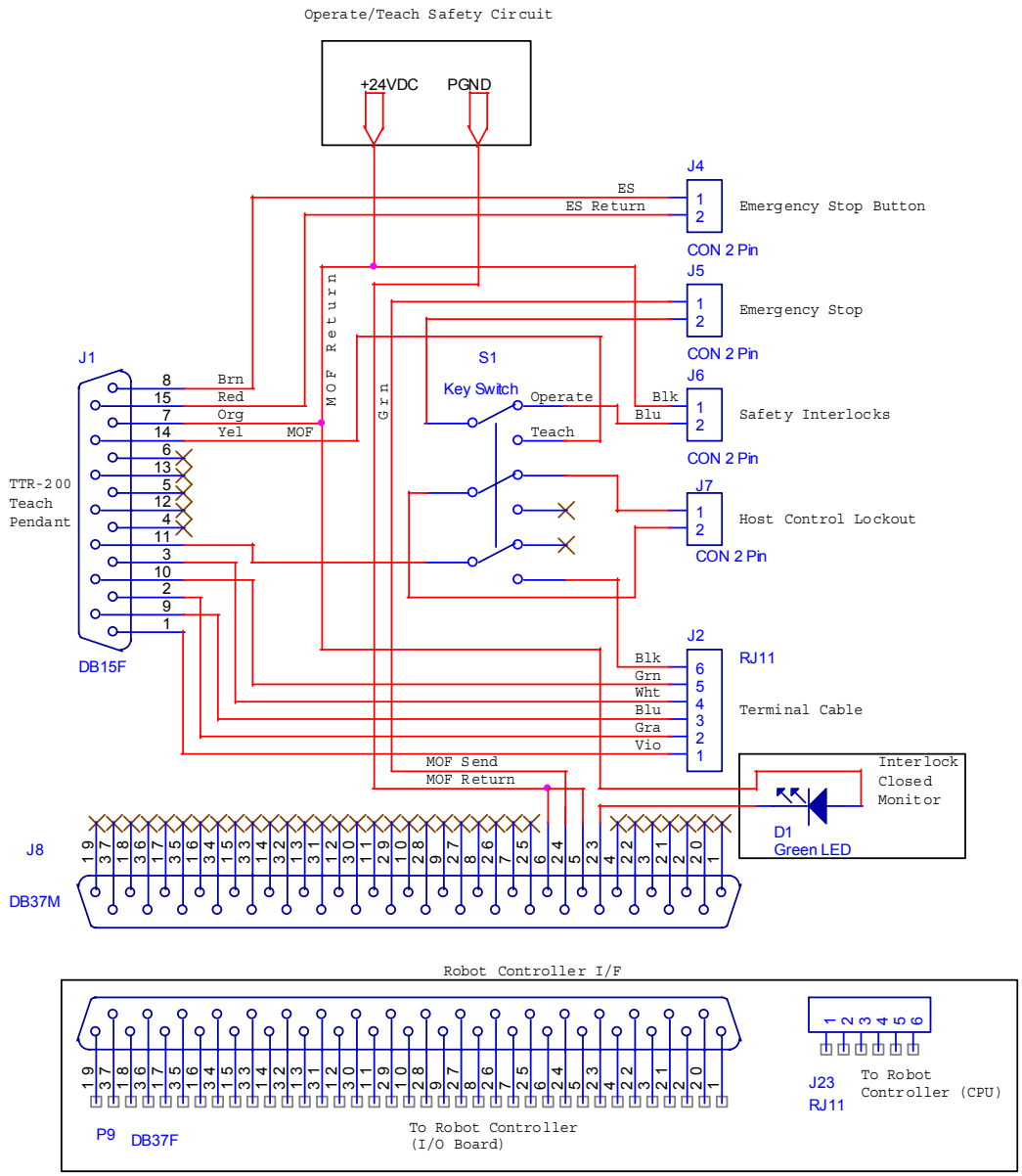

Figure 12-2: TTR-200 Teach Pendant DB37

Artisan Technology Group - Quality Instrumentation ... Guaranteed | (888) 88-SOURCE | www.artisantg.com

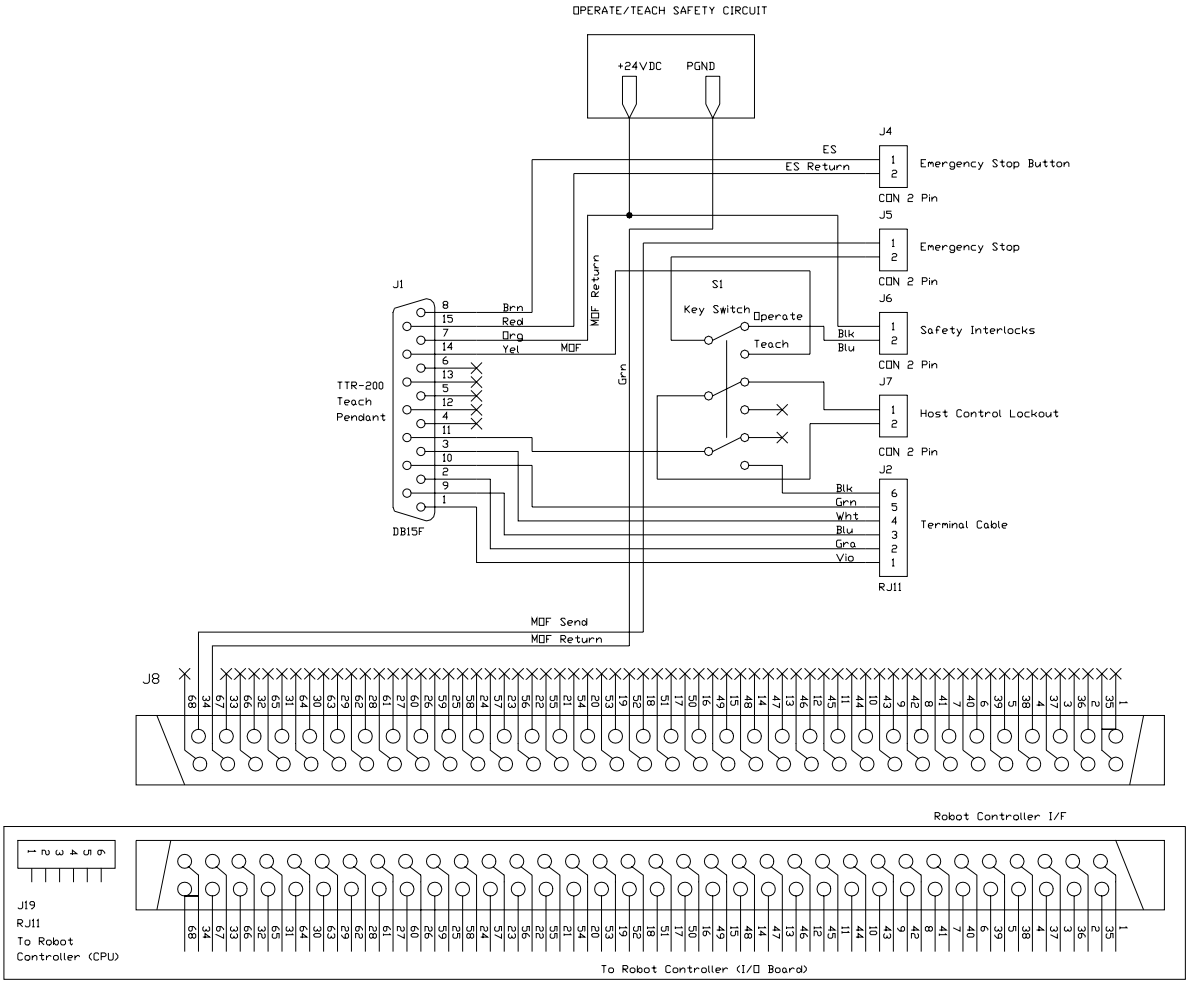

Figure 12-3: TTR-200 Teach Pendant DB68

Artisan Technology Group - Quality Instrumentation ... Guaranteed | (888) 88-SOURCE | www.artisantg.com

Artisan Technology Group is an independent supplier of quality pre-owned equipment

Gold-standard solutions

Extend the life of your critical industrial, commercial, and military systems with our superior service and support.

We buy equipment

Planning to upgrade your current equipment? Have surplus equipment taking up shelf space? We'll give it a new home.

Learn more!

Visit us at **artisantg.com** for more info on price quotes, drivers, technical specifications, manuals, and documentation.

Artisan Scientific Corporation dba Artisan Technology Group is not an affiliate, representative, or authorized distributor for any manufacturer listed herein.

We're here to make your life easier. How can we help you today?

(217) 352-9330 | sales@artisantg.com | artisantg.com

ARTISAN® TECHNOLOGY GROUP